Компьютерные технологии при разработке и проектировании электрооборудования автономных объектов

Вводная лабораторная работа

MATLAB R2012a

File Edit Debug Desktop Window Help

Current Folder: C:\Users\student.ECAO2\Documents\MATLAB

Shortcuts How to Add What's New

Current Folder

« MATLAB ▸

Name

.SimulinkProject

ТЭП

untitled.mdl

Details

Select a file to view details

Command Window

New to MATLAB? Watch this Video, see Demos, or read Getting Started.

fx >>

Workspace

Select data to...

Name Value

Command History

%-- 12.02.2019 13:46 --%

%-- 19.02.2019 14:26 --%

%-- 26.02.2019 13:40 --%

%-- 05.03.2019 13:49 --%

%-- 12.03.2019 13:36 --%

%-- 19.03.2019 13:46 --%

%-- 26.03.2019 13:33 --%

%-- 26.03.2019 14:33 --%

%-- 09.04.2019 13:31 --%

%-- 16.04.2019 13:32 --%

%-- 23.04.2019 13:46 --%

%-- 23.04.2019 14:41 --%

%-- 30.04.2019 13:40 --%

%-- 08.05.2019 17:11 --%

%-- 14.05.2019 13:47 --%

%-- 21.05.2019 13:49 --%

%-- 21.05.2019 15:42 --%

%-- 28.05.2019 13:33 --%

%-- 04.06.2019 12:58 --%

%-- 04.06.2019 14:21 --%

%-- 04.06.2019 14:30 --%

%-- 19.06.2019 13:03 --%

DPT_daten

%-- 03.09.2019 14:54 --%

Start Ready

OVR

MATLAB R2012a

EN 14:54

MATLAB R2012a

File Edit Debug Desktop Window Help

Current Folder: C:\Users\student.ECAO2\Documents\MATLAB

Shortcuts How to Add What's New

Current Folder

« MATLAB ▸

Name

Command Window

New to MATLAB? Watch this Video, see Demos, or read Getting Started.

Workspace

Select data to...

Name Value

Simulink Library Browser

File Edit View Help

Enter search term

Libraries

Simulink
- Commonly Used Blocks
- Continuous
- Discontinuities
- Discrete
- Logic and Bit Operations
- Lookup Tables
- Math Operations
- Model Verification
- Model-Wide Utilities
- Ports & Subsystems
- Signal Attributes
- Signal Routing
- Sinks
- Sources
- User-Defined Functions
- Additional Math & Discrete

Control System Toolbox

Simscape

Library: Simulink | Search Results: (none) | Most

Commonly Used Blocks

Continuous

Discontinuities

Discrete

Logic and Bit Operations

Lookup Tables

Math Operations

Showing: Simulink

Details

Select a file to view details

Command History

%-- 12.02.2019 13:46 --%
%-- 19.02.2019 14:26 --%
%-- 26.02.2019 13:40 --%
%-- 05.03.2019 13:49 --%
%-- 12.03.2019 13:36 --%
%-- 19.03.2019 13:46 --%
%-- 26.03.2019 13:33 --%
%-- 26.03.2019 14:33 --%
%-- 09.04.2019 13:31 --%
%-- 16.04.2019 13:32 --%
%-- 23.04.2019 13:46 --%
%-- 23.04.2019 14:41 --%
%-- 30.04.2019 13:40 --%
%-- 08.05.2019 17:11 --%
%-- 14.05.2019 13:47 --%
%-- 21.05.2019 13:49 --%
%-- 21.05.2019 15:42 --%
%-- 28.05.2019 13:33 --%
%-- 04.06.2019 12:58 --%
%-- 04.06.2019 14:21 --%
%-- 04.06.2019 14:30 --%
%-- 19.06.2019 13:03 --%
DPT_daten
%-- 03.09.2019 14:54 --%

Start Ready

OVR

MATLAB R2012a | Simulink Library Bro... | Безымянный - Paint

EN 14:55

MATLAB R2012a

File Edit Debug Desktop Window Help

Current Folder: C:\Users\student.ECAO2\Docum

Shortcuts How to Add What's New

Current Folder

« MATLAB ▸

Name

Command Window

New to MATLAB? Watch this Video, see Demo

fx >>

Simulink Library Browser

File Edit View Help

Enter search term

Libraries

- Simulink
  - Commonly Used Blocks
  - Continuous
  - Discontinuities
  - Discrete
  - Logic and Bit Operations
  - Lookup Tables
  - Math Operations
  - Model Verification
  - Model-Wide Utilities
  - Ports & Subsystems
  - Signal Attributes
  - Signal Routing
  - Sinks
  - Sources
  - User-Defined Functions
  - Additional Math & Discrete
- Control System Toolbox
- Simscape

Library: Simulink | Search Results: (none) | Most

Commonly Used Blocks

Continuous

Discontinuities

Discrete

Logic and Bit Operations

Lookup Tables

Math Operations

Showing: Simulink

Details

Select a file to view details

untitled

File Edit View Simulation Format Tools Help

10.0 Normal

Ready 100% ode45

%-- 19.06.2019 13:03 --%

DPT_daten

%-- 03.09.2019 14:54 --%

Start Ready

OVR

MATLAB R2012a | Simulink Library Bro... | untitled

EN 14:56

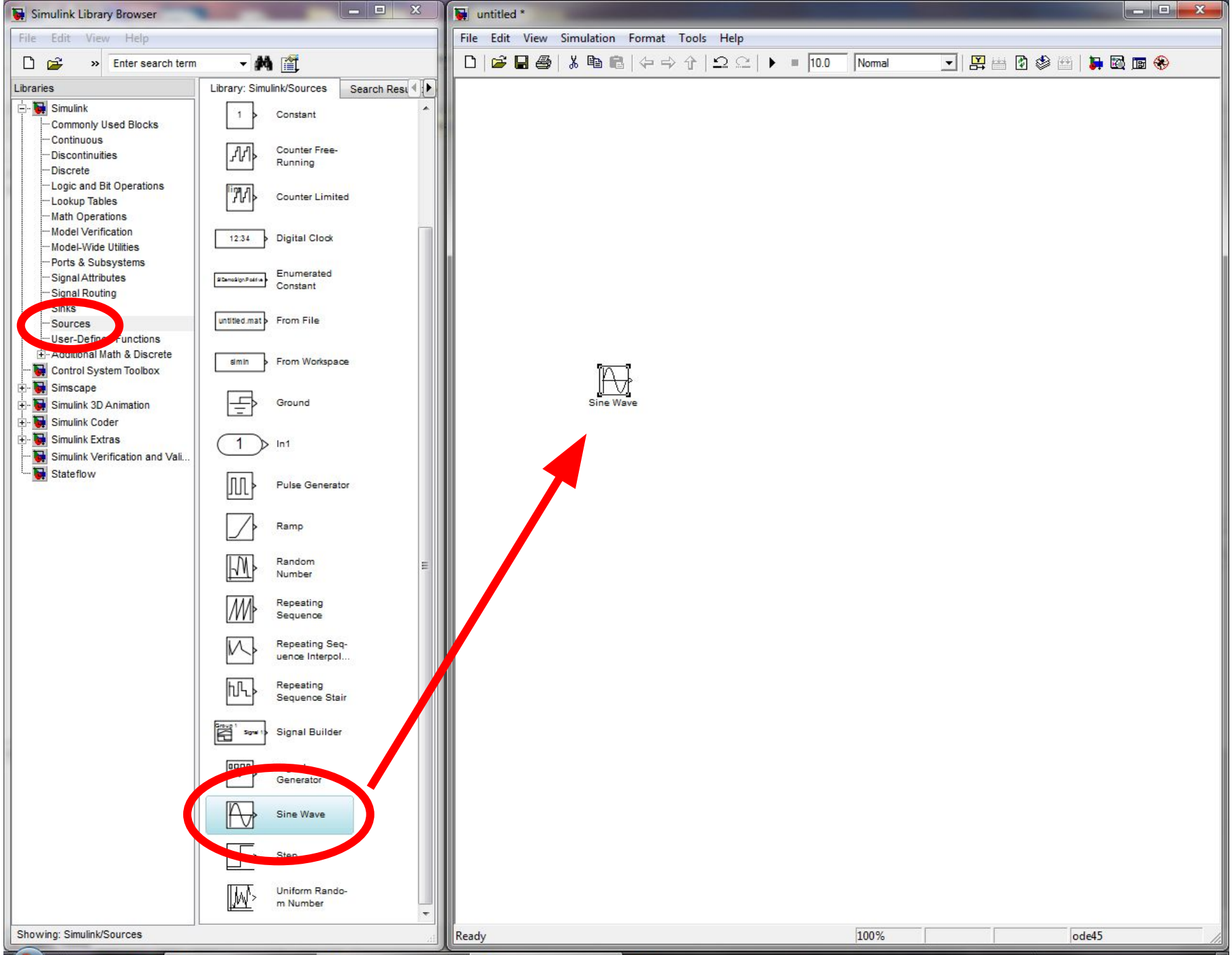
Simulink Library Browser
File Edit View Help
Enter search term
Libraries
Library: Simulink/Sources
Search Resu
Simulink
Commonly Used Blocks
Continuous
Discontinuities
Discrete
Logic and Bit Operations
Lookup Tables
Math Operations
Model Verification
Model-Wide Utilities
Ports & Subsystems
Signal Attributes
Signal Routing
Sinks
Sources
User-Defin Functions
Additional Math & Discrete
Control System Toolbox
Simscape
Simulink 3D Animation
Simulink Coder
Simulink Extras
Simulink Verification and Vali...
Stateflow
Constant
Counter Free-Running
Counter Limited
Digital Clock
Enumerated Constant
From File
From Workspace
Ground
In1
Pulse Generator
Ramp
Random Number
Repeating Sequence
Repeating Seq-uence Interpol...
Repeating Sequence Stair
Signal Builder
Generator
Sine Wave
Step
Uniform Rando-m Number
Showing: Simulink/Sources
untitled *
File Edit View Simulation Format Tools Help
10.0
Normal
Sine Wave
Ready
100%
ode45
MATLAB R2012a
Simulink Library Bro...
untitled *
EN
14:58

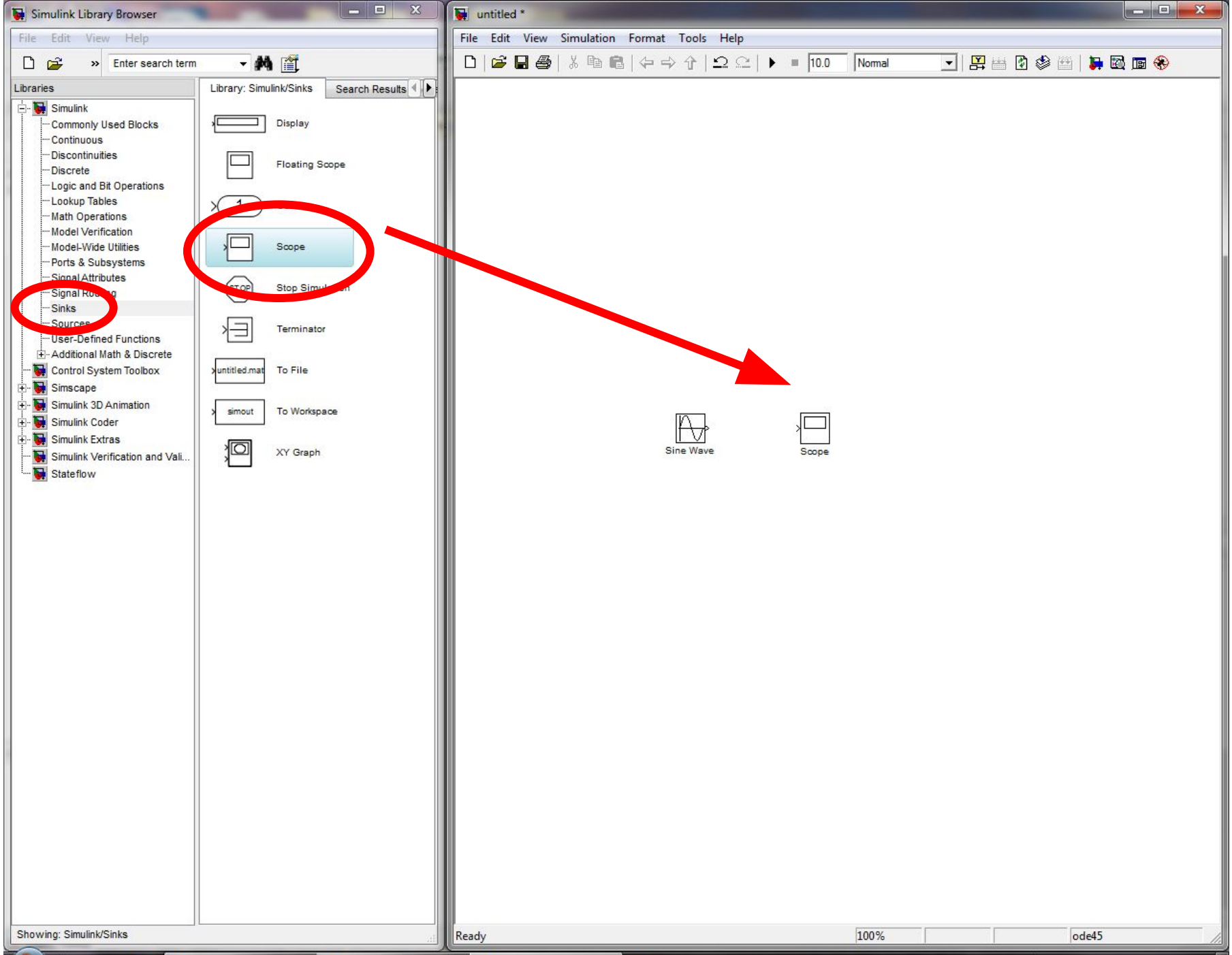
Simulink Library Browser
File Edit View Help
Enter search term
Libraries
Library: Simulink/Sinks
Search Results
Simulink
Commonly Used Blocks
Continuous
Discontinuities
Discrete
Logic and Bit Operations
Lookup Tables
Math Operations
Model Verification
Model-Wide Utilities
Ports & Subsystems
Signal Attributes
Signal Routing
Sinks
Sources
User-Defined Functions
Additional Math & Discrete
Control System Toolbox
Simscape
Simulink 3D Animation
Simulink Coder
Simulink Extras
Simulink Verification and Vali...
Stateflow
Display
Floating Scope
Scope
Stop Simulation
Terminator
To File
To Workspace
XY Graph
Showing: Simulink/Sinks
untitled *
File Edit View Simulation Format Tools Help
10.0
Normal
Sine Wave
Scope
Ready
100%
ode45
MATLAB R2012a
Simulink Library Bro...
untitled *
EN
14:59

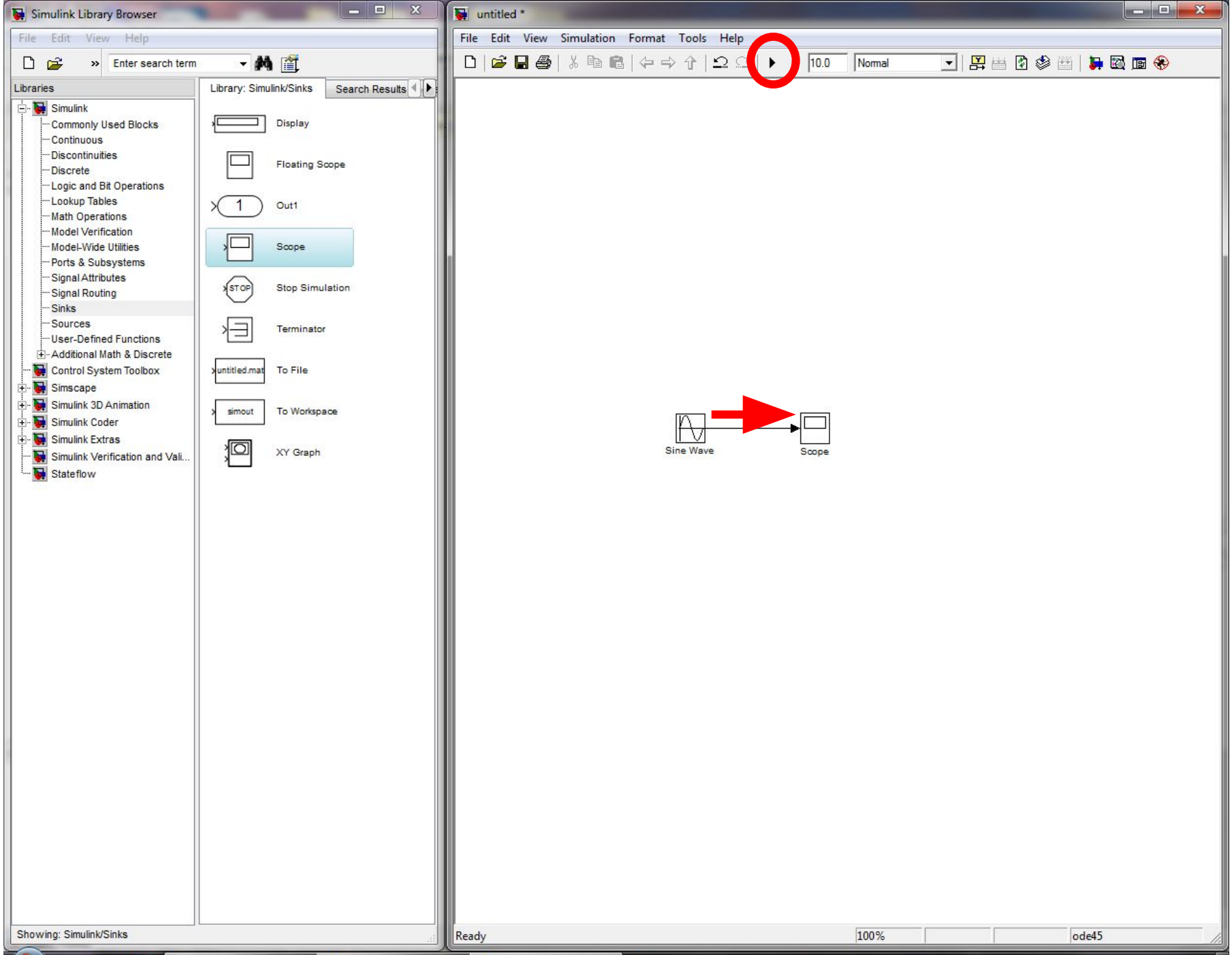
Simulink Library Browser
File Edit View Help
Enter search term
Libraries
Library: Simulink/Sinks
Search Results
Simulink
Commonly Used Blocks
Continuous
Discontinuities
Discrete
Logic and Bit Operations
Lookup Tables
Math Operations
Model Verification
Model-Wide Utilities
Ports & Subsystems
Signal Attributes
Signal Routing
Sinks
Sources
User-Defined Functions
Additional Math & Discrete
Control System Toolbox
Simscape
Simulink 3D Animation
Simulink Coder
Simulink Extras
Simulink Verification and Vali...
Stateflow
Display
Floating Scope
Out1
Scope
Stop Simulation
Terminator
To File
To Workspace
XY Graph
Showing: Simulink/Sinks
untitled *
File Edit View Simulation Format Tools Help
10.0
Normal
Sine Wave
Scope
Ready
100%
ode45
MATLAB R2012a
Simulink Library Bro...
untitled *
EN
14:59

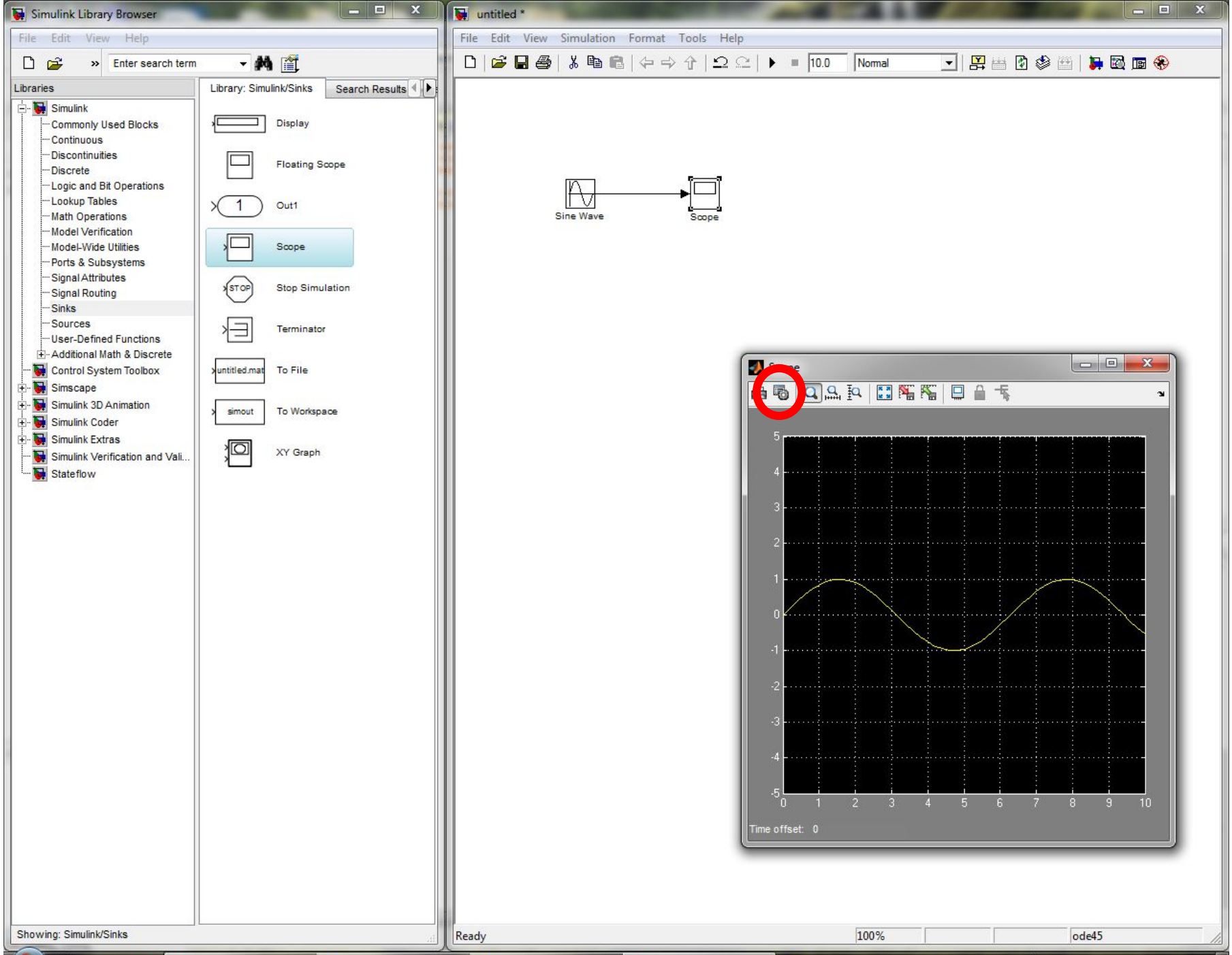
Simulink Library Browser
File Edit View Help
Enter search term
Libraries
Library: Simulink/Sinks
Search Results
Simulink
Commonly Used Blocks
Continuous
Discontinuities
Discrete
Logic and Bit Operations
Lookup Tables
Math Operations
Model Verification
Model-Wide Utilities
Ports & Subsystems
Signal Attributes
Signal Routing
Sinks
Sources
User-Defined Functions
Additional Math & Discrete
Control System Toolbox
Simscape
Simulink 3D Animation
Simulink Coder
Simulink Extras
Simulink Verification and Vali...
Stateflow
Display
Floating Scope
Out1
Scope
Stop Simulation
Terminator
To File
To Workspace
XY Graph
Showing: Simulink/Sinks
untitled *
File Edit View Simulation Format Tools Help
10.0
Normal
Sine Wave
Scope
Time offset: 0
Ready
100%
ode45
MATLAB R2012a
Simulink Library Bro...
untitled *
Scope
EN
15:00

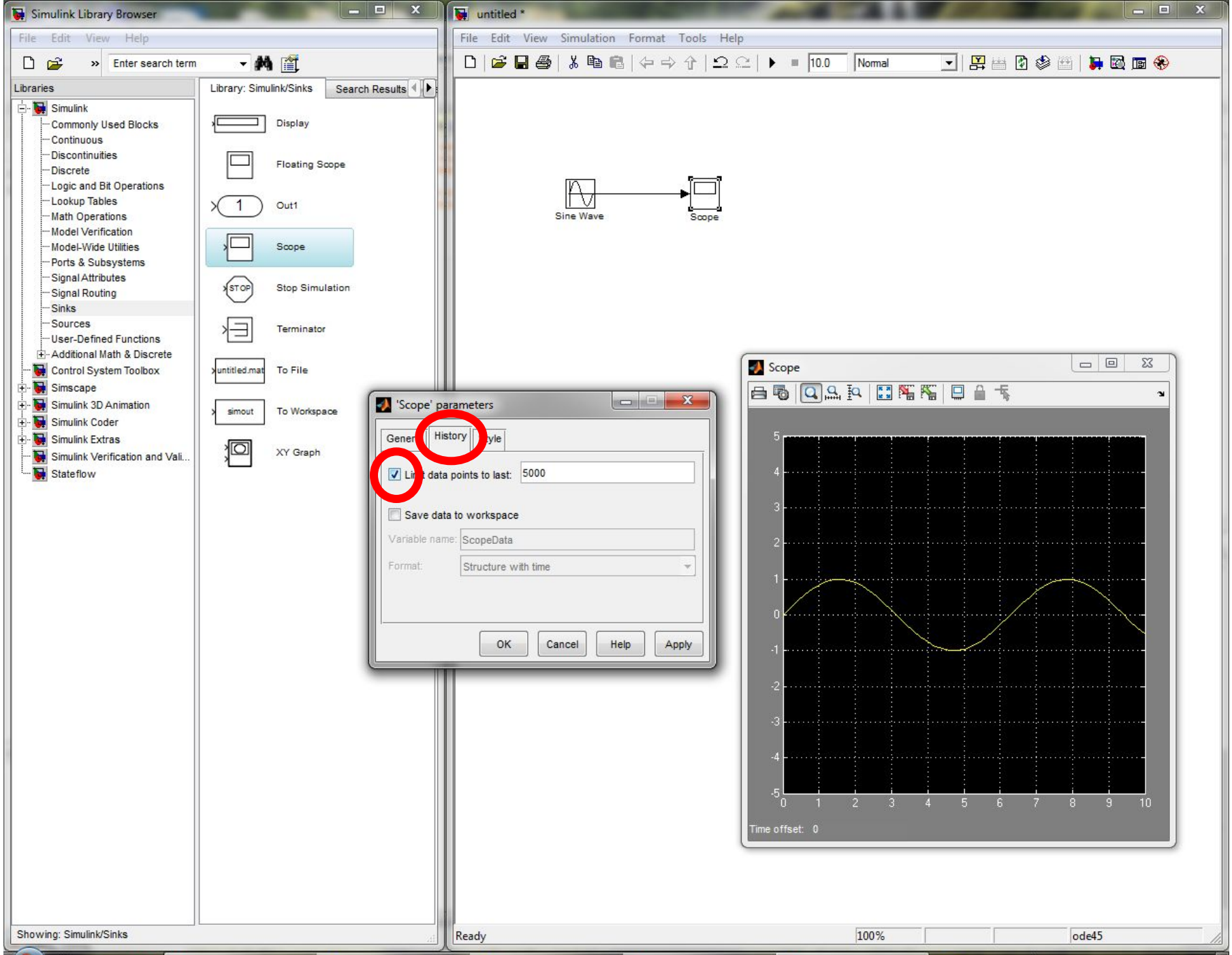
Simulink Library Browser
File Edit View Help
Enter search term
Libraries
Library: Simulink/Sinks
Search Results
Simulink
Commonly Used Blocks
Continuous
Discontinuities
Discrete
Logic and Bit Operations
Lookup Tables
Math Operations
Model Verification
Model-Wide Utilities
Ports & Subsystems
Signal Attributes
Signal Routing
Sinks
Sources
User-Defined Functions
Additional Math & Discrete
Control System Toolbox
Simscape
Simulink 3D Animation
Simulink Coder
Simulink Extras
Simulink Verification and Vali...
Stateflow
Display
Floating Scope
Out1
Scope
Stop Simulation
Terminator
To File
To Workspace
XY Graph
Showing: Simulink/Sinks
untitled *
File Edit View Simulation Format Tools Help
10.0
Normal
Sine Wave
Scope
'Scope' parameters
Gener
History
Style
Limit data points to last:
5000
Save data to workspace
Variable name:
ScopeData
Format:
Structure with time
OK
Cancel
Help
Apply
Scope
Time offset: 0
Ready
100%
ode45
MATLAB R2012a
Simulink Library Bro...
untitled *
Scope
'Scope' parameters
EN
15:00

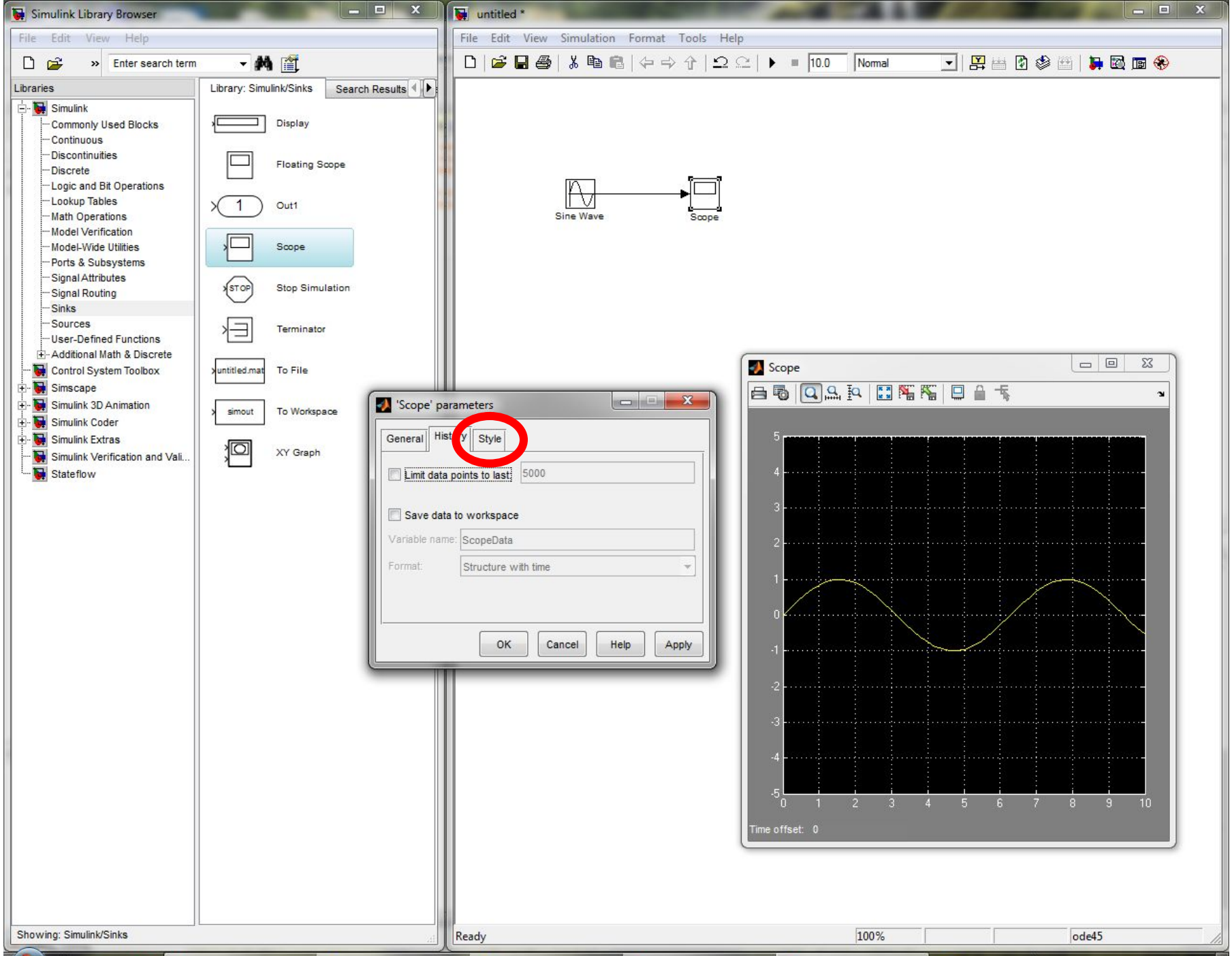
Simulink Library Browser
File Edit View Help
Enter search term
Libraries
Library: Simulink/Sinks
Search Results
Simulink
Commonly Used Blocks
Continuous
Discontinuities
Discrete
Logic and Bit Operations
Lookup Tables
Math Operations
Model Verification
Model-Wide Utilities
Ports & Subsystems
Signal Attributes
Signal Routing
Sinks
Sources
User-Defined Functions
Additional Math & Discrete
Control System Toolbox
Simscape
Simulink 3D Animation
Simulink Coder
Simulink Extras
Simulink Verification and Vali...
Stateflow
Display
Floating Scope
Out1
Scope
Stop Simulation
Terminator
To File
To Workspace
XY Graph
Showing: Simulink/Sinks
untitled *
File Edit View Simulation Format Tools Help
10.0
Normal
Sine Wave
Scope
'Scope' parameters
General
History
Style
Limit data points to last:
5000
Save data to workspace
Variable name:
ScopeData
Format:
Structure with time
OK
Cancel
Help
Apply
Scope
Time offset: 0
Ready
100%
ode45
MATLAB R2012a
Simulink Library Bro...
untitled *
Scope
'Scope' parameters
EN
15:01

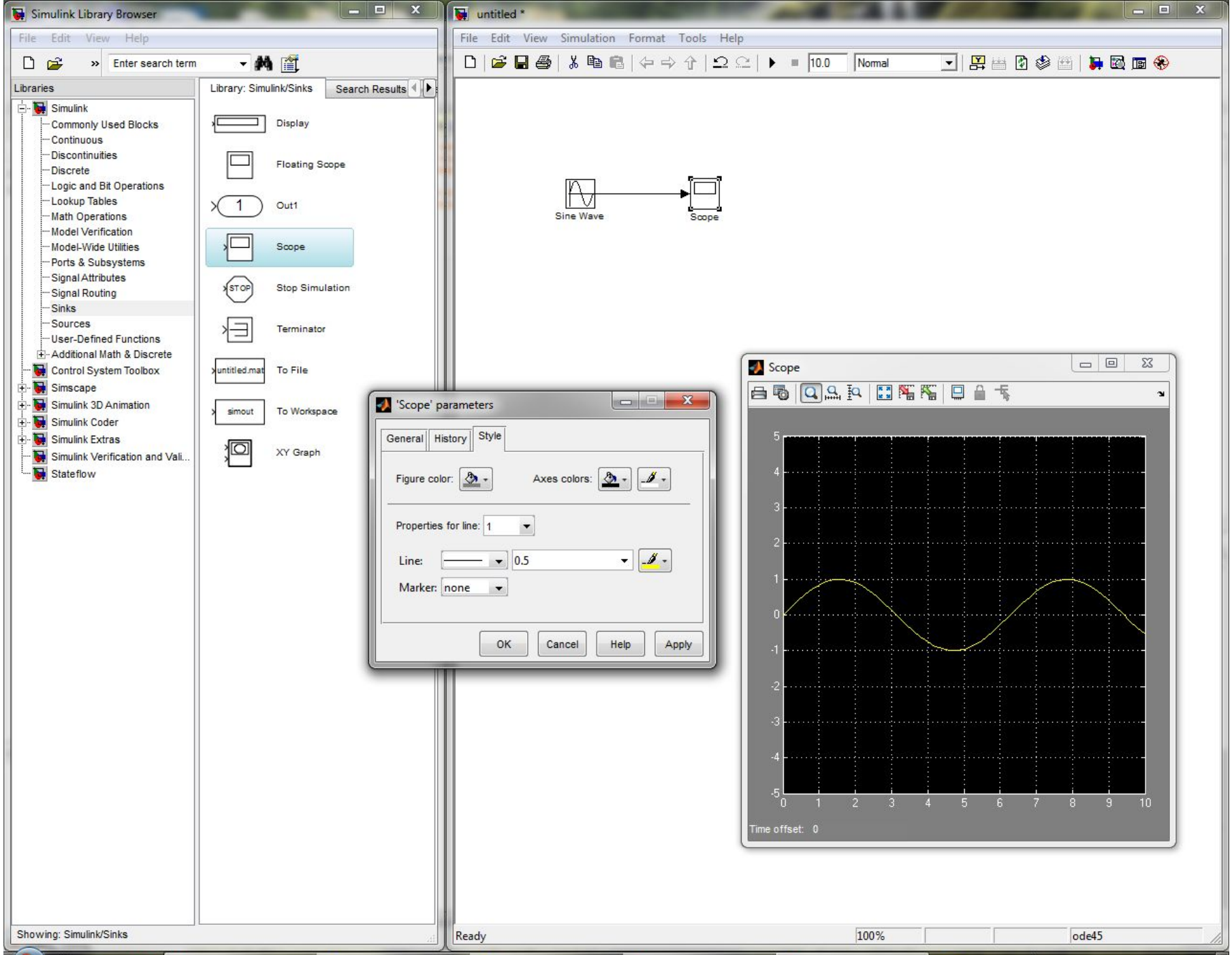
Simulink Library Browser
File Edit View Help
Enter search term
Libraries
Library: Simulink/Sinks
Search Results
Simulink
Commonly Used Blocks
Continuous
Discontinuities
Discrete
Logic and Bit Operations
Lookup Tables
Math Operations
Model Verification
Model-Wide Utilities
Ports & Subsystems
Signal Attributes
Signal Routing
Sinks
Sources
User-Defined Functions
Additional Math & Discrete
Control System Toolbox
Simscape
Simulink 3D Animation
Simulink Coder
Simulink Extras
Simulink Verification and Vali...
Stateflow
Display
Floating Scope
Out1
Scope
Stop Simulation
Terminator
To File
To Workspace
XY Graph
Showing: Simulink/Sinks
untitled *
File Edit View Simulation Format Tools Help
10.0
Normal
Sine Wave
Scope
'Scope' parameters
General
History
Style
Figure color:
Axes colors:
Properties for line: 1
Line:
0.5
Marker: none
OK
Cancel
Help
Apply
Scope
Time offset: 0
Ready
100%
ode45
MATLAB R2012a
Simulink Library Bro...
untitled *
Scope
'Scope' parameters
EN
15:01

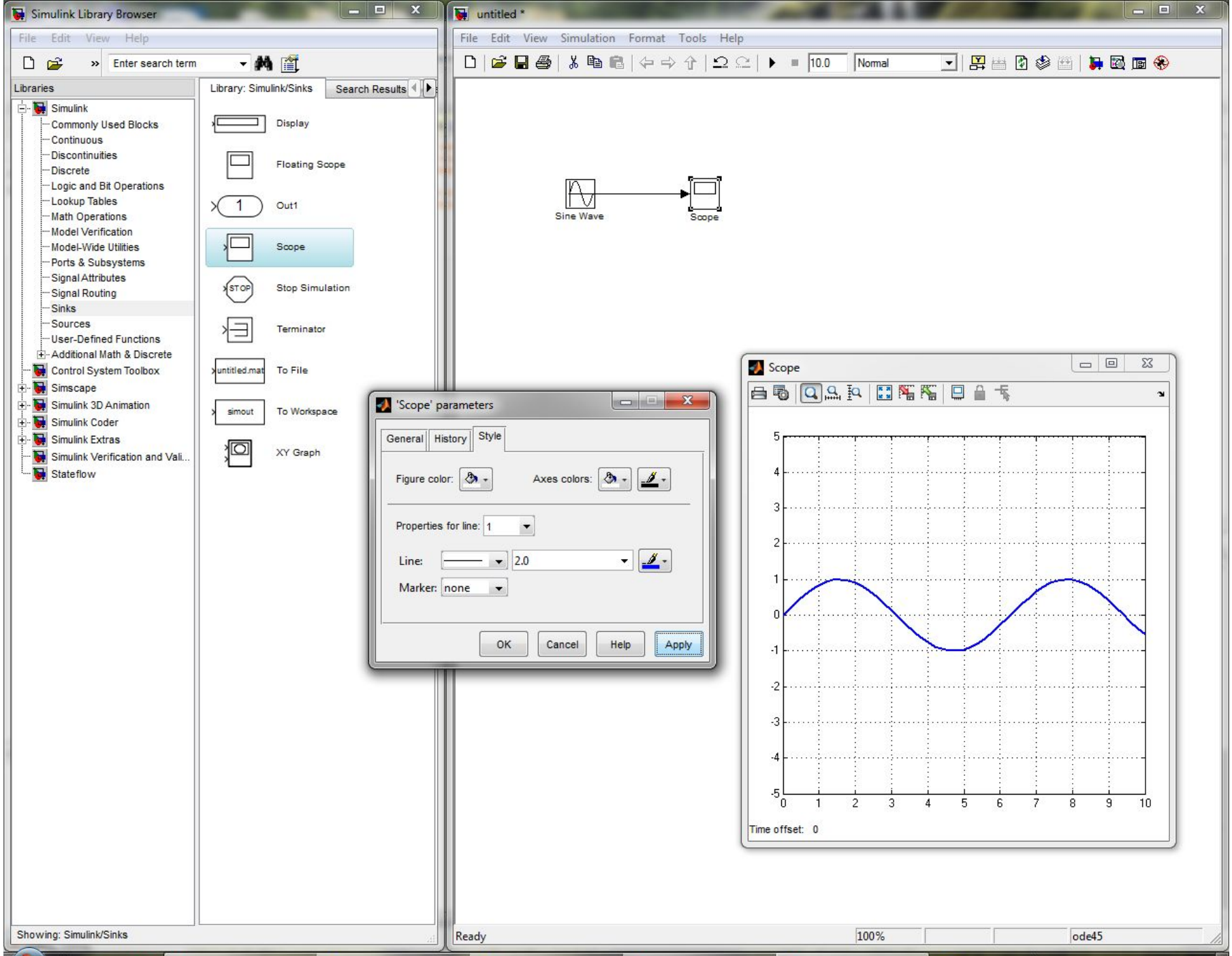
Simulink Library Browser
File Edit View Help
Enter search term
Libraries
Simulink
Commonly Used Blocks
Continuous
Discontinuities
Discrete
Logic and Bit Operations
Lookup Tables
Math Operations
Model Verification
Model-Wide Utilities
Ports & Subsystems
Signal Attributes
Signal Routing
Sinks
Sources
User-Defined Functions
Additional Math & Discrete
Control System Toolbox
Simscape
Simulink 3D Animation
Simulink Coder
Simulink Extras
Simulink Verification and Vali...
Stateflow
Library: Simulink/Sinks
Search Results
Display
Floating Scope
Out1
Scope
Stop Simulation
Terminator
To File
To Workspace
XY Graph
Showing: Simulink/Sinks
untitled *
File Edit View Simulation Format Tools Help
10.0
Normal
Sine Wave
Scope
'Scope' parameters
General
History
Style
Figure color:
Axes colors:
Properties for line: 1
Line:
2.0
Marker: none
OK
Cancel
Help
Apply
Scope
Time offset: 0
Ready
100%
ode45
MATLAB R2012a
Simulink Library Bro...
untitled *
Scope
'Scope' parameters
EN
15:01

Simulink Library Browser

File Edit View Help

Enter search term

Libraries

- Simulink
  - Commonly Used Blocks
  - Continuous
  - Discontinuities
  - Discrete
  - Logic and Bit Operations
  - Lookup Tables
  - Math Operations
  - Model Verification
  - Model-Wide Utilities
  - Ports & Subsystems
  - Signal Attributes
  - Signal Routing
  - Sinks
  - Sources
  - User-Defined Functions
  - Additional Math & Discrete
- Control System Toolbox
- Simscape
- Simulink 3D Animation
- Simulink Coder
- Simulink Extras
- Simulink Verification and Vali...
- Stateflow

Library: Simulink/Sinks | Search Results

Display
Floating Scope
Out1
Scope
Stop Simulation
Terminator
To File
To Workspace
XY Graph

Showing: Simulink/Sinks

untitled *

File Edit View Simulation Format Tools Help

10.0 Normal

Sine Wave → Scope

Source Block Parameters: Sine Wave

Sine Wave

Output a sine wave:

O(t) = Amp*Sin(Freq*t+Phase) + Bias

Sine type determines the computational technique used. The parameters in the two types are related through:

Samples per period = 2*pi / (Frequency * Sample time)

Number of offset samples = Phase * Samples per period / (2*pi)

Use the sample-based sine type if numerical problems due to running for large times (e.g. overflow in absolute time) occur.

Parameters

Sine type: Time based

Time (t): Use simulation time

Amplitude: 1

Bias: 0

Frequency: 100

Phase (rad): 0

Sample time: 0

☑ Interpret vector parameters as 1-D

OK Cancel Help Apply

Ready 100% ode45

MATLAB R2012a | Simulink Library Bro... | untitled * | Source Block Parame... | EN 15:03

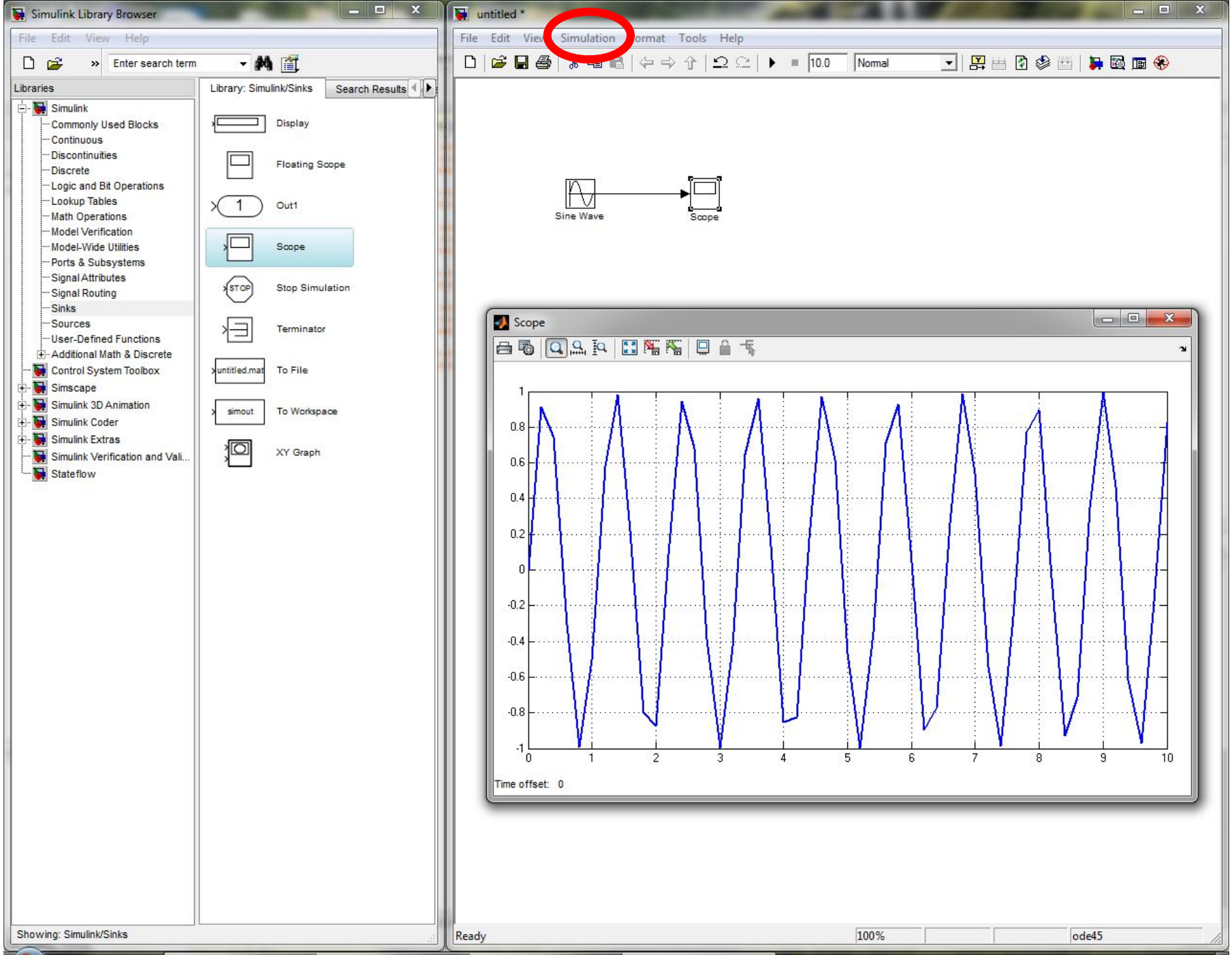
Simulink Library Browser
File Edit View Help
Enter search term
Libraries
Simulink
Commonly Used Blocks
Continuous
Discontinuities
Discrete
Logic and Bit Operations
Lookup Tables
Math Operations
Model Verification
Model-Wide Utilities
Ports & Subsystems
Signal Attributes
Signal Routing
Sinks
Sources
User-Defined Functions
Additional Math & Discrete
Control System Toolbox
Simscape
Simulink 3D Animation
Simulink Coder
Simulink Extras
Simulink Verification and Vali...
Stateflow
Library: Simulink/Sinks
Search Results
Display
Floating Scope
Out1
Scope
Stop Simulation
Terminator
To File
To Workspace
XY Graph
Showing: Simulink/Sinks
untitled *
File Edit View Simulation Format Tools Help
10.0
Normal
Sine Wave
Scope
Scope
Time offset: 0
Ready
100%
ode45
MATLAB R2012a
Simulink Library Bro...
untitled *
Scope
EN
15:03

Simulink Library Browser

File Edit View Help

Enter search term

Libraries

- Simulink
  - Commonly Used Blocks
  - Continuous
  - Discontinuities
  - Discrete
  - Logic and Bit Operations
  - Lookup Tables
  - Math Operations
  - Model Verification
  - Model-Wide Utilities
  - Ports & Subsystems
  - Signal Attributes
  - Signal Routing
  - Sinks
  - Sources
  - User-Defined Functions
  - Additional Math & Discrete
- Control System Toolbox
- Simscape
- Simulink 3D Animation
- Simulink Coder
- Simulink Extras
- Simulink Verification and Vali...
- Stateflow

Library: Simulink/Sinks | Search Results

- Display
- Floating Scope
- Out1
- Scope
- Stop Simulation
- Terminator
- To File
- To Workspace
- XY Graph

Showing: Simulink/Sinks

untitled *

File Edit View Simulation Format Tools Help

Start Ctrl+T

Configuration Parameters... Ctrl+E

✓ Normal

Accelerator

Rapid Accelerator

10.0 Normal

Sine Wave

Scope

Show the active configuration parameters dialog. 100% ode45

MATLAB R2012a | Simulink Library Bro... | untitled * | EN 15:03

Simulink Library Browser

File Edit View Help

Enter search term

Libraries

- Simulink
  - Commonly Used Blocks
  - Continuous
  - Discontinuities
  - Discrete
  - Logic and Bit Operations
  - Lookup Tables
  - Math Operations
  - Model Verification
  - Model-Wide Utilities
  - Ports & Subsystems
  - Signal Attributes
  - Signal Routing
  - Sinks
  - Sources
  - User-Defined Functions
  - Additional Math & Discrete
- Control System Toolbox
- Simscape
- Simulink 3D Animation
- Simulink Coder
- Simulink Extras
- Simulink Verification and Vali...
- Stateflow

Library: Simulink/Sinks | Search Results

Display

Floating Scope

Showing: Simulink/Sinks

untitled *

File Edit View Simulation Format Tools Help

10.0 Normal

Configuration Parameters: untitled/Configuration (Active)

Select:

- Solver
- Data Import/Export
- Optimization
- Diagnostics
- Hardware Implementation
- Model Referencing
- Simulation Target

Simulation time

Start time: 0.0 Stop time: 10.0

Solver options

Type: Variable-step Solver: ode45 (Dormand-Prince)

Max step size: auto Relative tolerance: 1e-3

Min step size: auto Absolute tolerance: auto

Maximum step size for variable-step solver.

Initial step size: auto Shape preservation: Disable All

Number of consecutive min steps: 1

Tasking and sample time options

Tasking mode for periodic sample times: Auto

Automatically handle rate transition for data transfer

Higher priority value indicates higher task priority

Zero-crossing options

Zero-crossing control: Use local settings Algorithm: Nonadaptive

Time tolerance: 10*128*eps Signal threshold: auto

Number of consecutive zero crossings: 1000

OK Cancel Help Apply

Ready 100% ode45

MATLAB R2012a | Simulink Library Bro... | untitled * | Configuration Param... | EN | 15:04

Simulink Library Browser

File Edit View Help

Enter search term

Libraries

- Simulink
  - Commonly Used Blocks
  - Continuous
  - Discontinuities
  - Discrete
  - Logic and Bit Operations
  - Lookup Tables
  - Math Operations
  - Model Verification
  - Model-Wide Utilities
  - Ports & Subsystems
  - Signal Attributes
  - Signal Routing
  - Sinks
  - Sources
  - User-Defined Functions
  - Additional Math & Discrete
- Control System Toolbox
- Simscape
- Simulink 3D Animation
- Simulink Coder
- Simulink Extras
- Simulink Verification and Vali...
- Stateflow

Library: Simulink/Sinks | Search Results

Display

Showing: Simulink/Sinks

untitled *

File Edit View Simulation Format Tools Help

10.0 | Normal

Configuration Parameters: untitled/Configuration (Active)

Select:

- Solver
- Data Import/Export
- Optimization
- Diagnostics
- Hardware Implementation
- Model Referencing
- Simulation Target

Simulation time

Start time: 0.0 | Stop time: 10.0

Solver options

Type: Variable-step | Solver: ode45 (Dormand-Prince)

Max step size: 1/10000 | Relative tolerance: 1e-3

Min step size: auto | Absolute tolerance: auto

Initial step size: auto | Shape preservation: Disable All

Number of consecutive min steps: 1

Tasking and sample time options

Tasking mode for periodic sample times: Auto

☐ Automatically handle rate transition for data transfer

☐ Higher priority value indicates higher task priority

Zero-crossing options

Zero-crossing control: Use local settings | Algorithm: Nonadaptive

Time tolerance: 10*128*eps | Signal threshold: auto

Number of consecutive zero crossings: 1000

OK | Cancel | Help | Apply

Ready | 100% | ode45

MATLAB R2012a | Simulink Library Bro... | untitled * | Configuration Param... | EN | 15:04

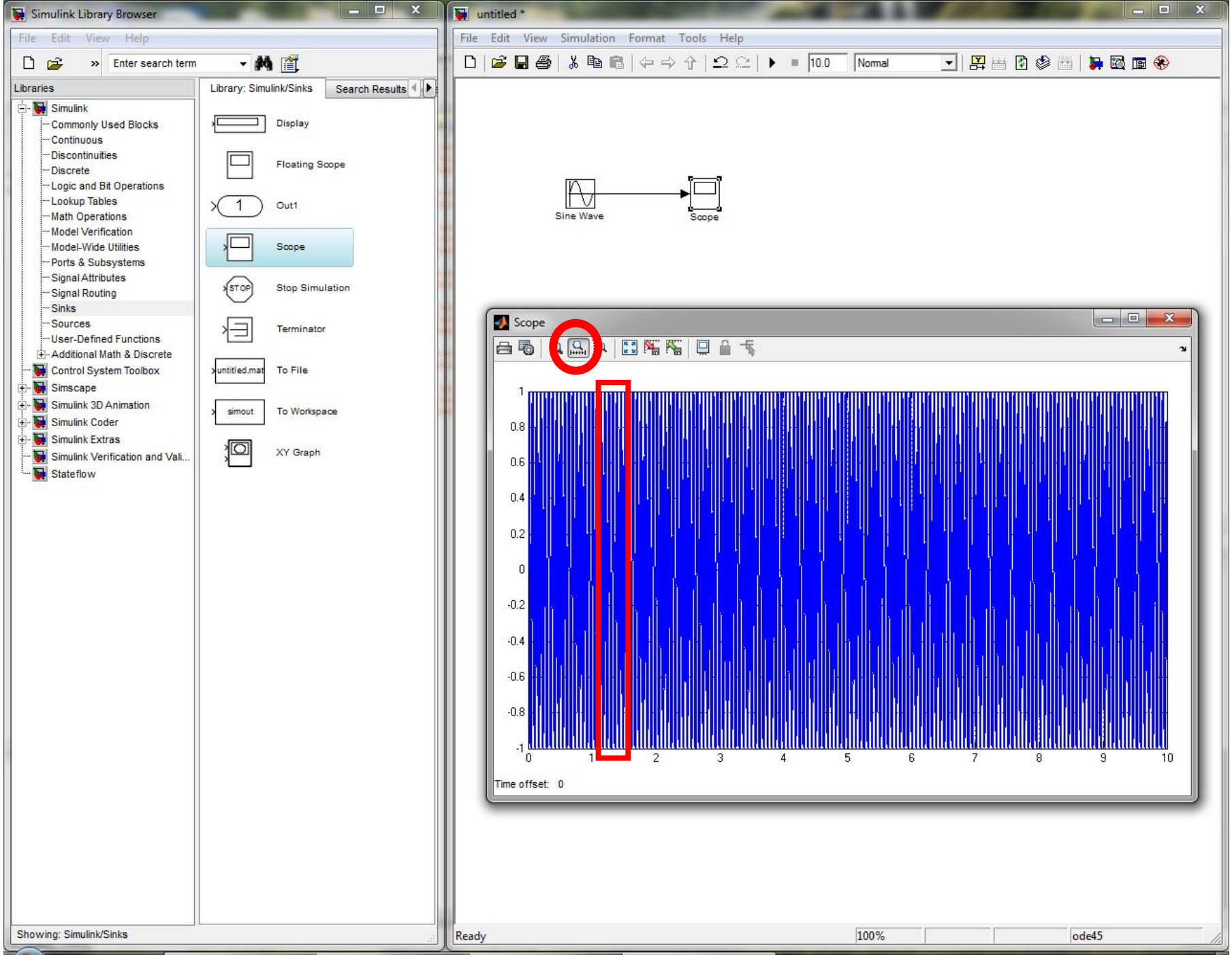
Simulink Library Browser
File Edit View Help
Enter search term
Libraries
Library: Simulink/Sinks
Search Results
Simulink
Commonly Used Blocks
Continuous
Discontinuities
Discrete
Logic and Bit Operations
Lookup Tables
Math Operations
Model Verification
Model-Wide Utilities
Ports & Subsystems
Signal Attributes
Signal Routing
Sinks
Sources
User-Defined Functions
Additional Math & Discrete
Control System Toolbox
Simscape
Simulink 3D Animation
Simulink Coder
Simulink Extras
Simulink Verification and Vali...
Stateflow
Display
Floating Scope
Out1
Scope
Stop Simulation
Terminator
To File
To Workspace
XY Graph
Showing: Simulink/Sinks
untitled *
File Edit View Simulation Format Tools Help
10.0
Normal
Sine Wave
Scope
Scope
Time offset: 0
Ready
100%
ode45
MATLAB R2012a
Simulink Library Bro...
untitled *
Scope
EN
15:05

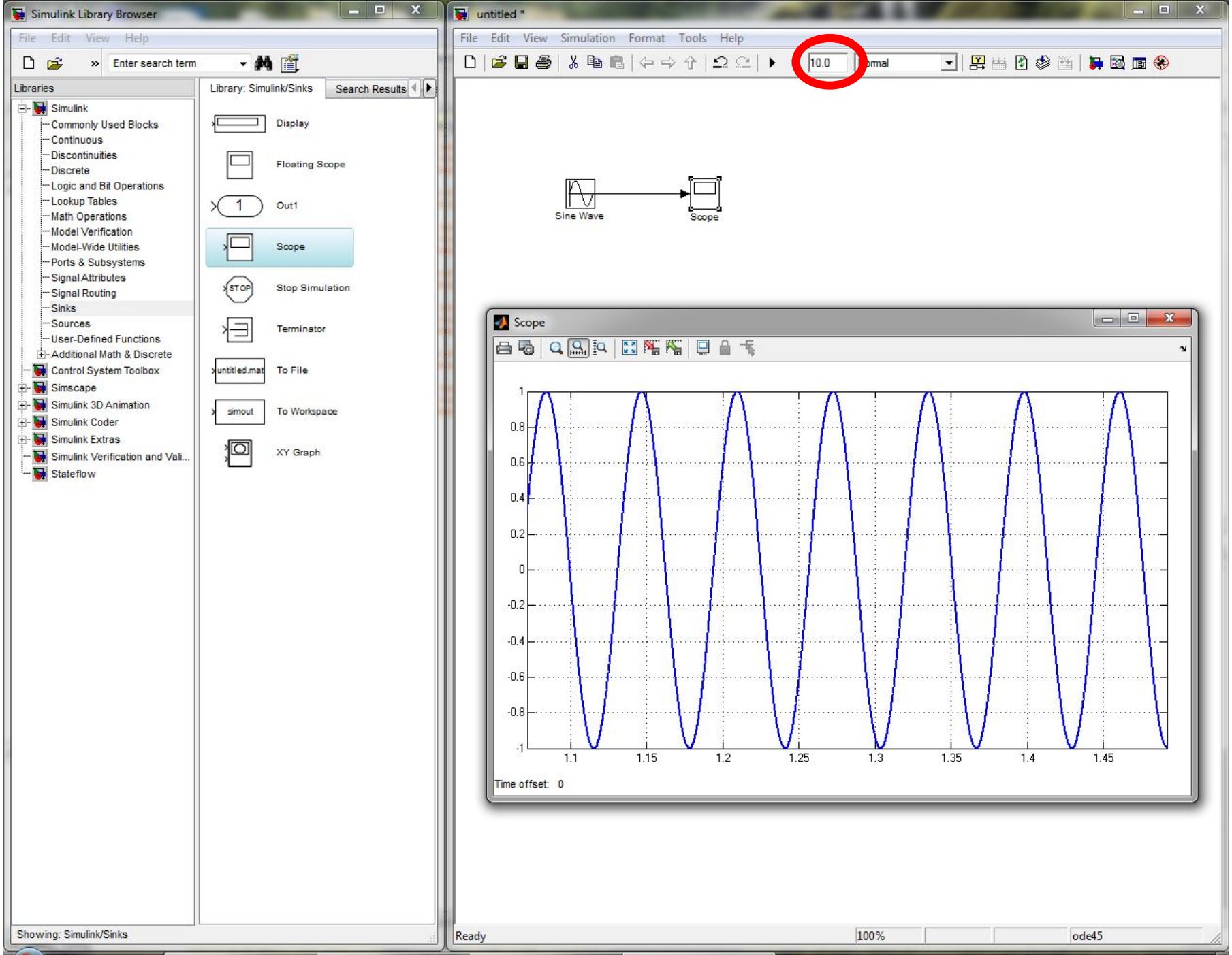
Simulink Library Browser
File Edit View Help
Enter search term
Libraries
Library: Simulink/Sinks
Search Results
Simulink
Commonly Used Blocks
Continuous
Discontinuities
Discrete
Logic and Bit Operations
Lookup Tables
Math Operations
Model Verification
Model-Wide Utilities
Ports & Subsystems
Signal Attributes
Signal Routing
Sinks
Sources
User-Defined Functions
Additional Math & Discrete
Control System Toolbox
Simscape
Simulink 3D Animation
Simulink Coder
Simulink Extras
Simulink Verification and Vali...
Stateflow
Display
Floating Scope
Out1
Scope
Stop Simulation
Terminator
To File
To Workspace
XY Graph
Showing: Simulink/Sinks
untitled *
File Edit View Simulation Format Tools Help
10.0
Sine Wave
Scope
Scope
1
0.8
0.6
0.4
0.2
0
-0.2
-0.4
-0.6
-0.8
-1
1.1
1.15
1.2
1.25
1.3
1.35
1.4
1.45
Time offset: 0
Ready
100%
ode45
MATLAB R2012a
Simulink Library Bro...
untitled *
Scope
EN
15:05

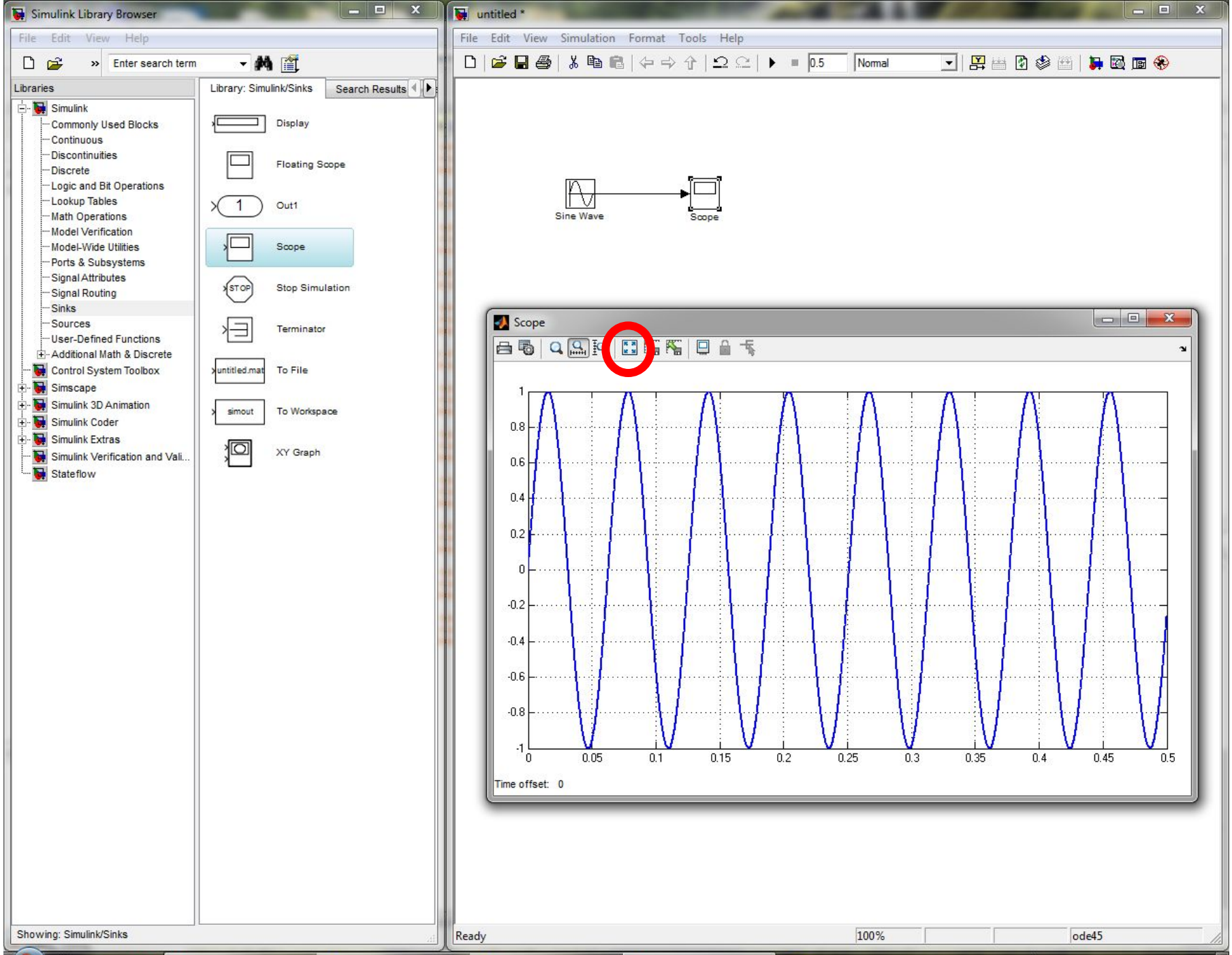
Simulink Library Browser
File Edit View Help
Enter search term
Libraries
Library: Simulink/Sinks
Search Results
Simulink
Commonly Used Blocks
Continuous
Discontinuities
Discrete
Logic and Bit Operations
Lookup Tables
Math Operations
Model Verification
Model-Wide Utilities
Ports & Subsystems
Signal Attributes
Signal Routing
Sinks
Sources
User-Defined Functions
Additional Math & Discrete
Control System Toolbox
Simscape
Simulink 3D Animation
Simulink Coder
Simulink Extras
Simulink Verification and Vali...
Stateflow
Display
Floating Scope
Out1
Scope
Stop Simulation
Terminator
To File
To Workspace
XY Graph
Showing: Simulink/Sinks
untitled *
File Edit View Simulation Format Tools Help
0.5
Normal
Sine Wave
Scope
Scope
1
0.8
0.6
0.4
0.2
0
-0.2
-0.4
-0.6
-0.8
-1
0
0.05
0.1
0.15
0.2
0.25
0.3
0.35
0.4
0.45
0.5
Time offset: 0
Ready
100%
ode45
MATLAB R2012a
Simulink Library Bro...
untitled *
Scope
EN
15:06

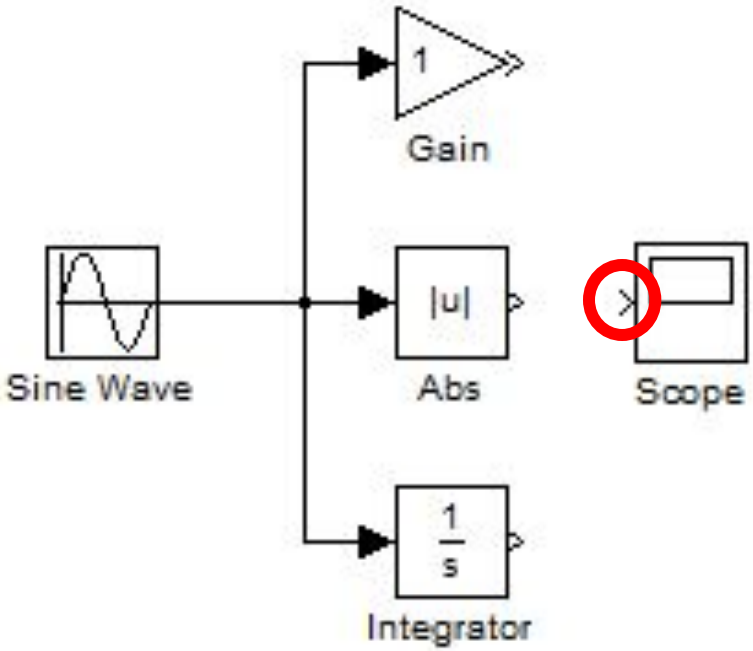
1
Gain
Sine Wave
|u|
Abs
Scope
1
s
Integrator

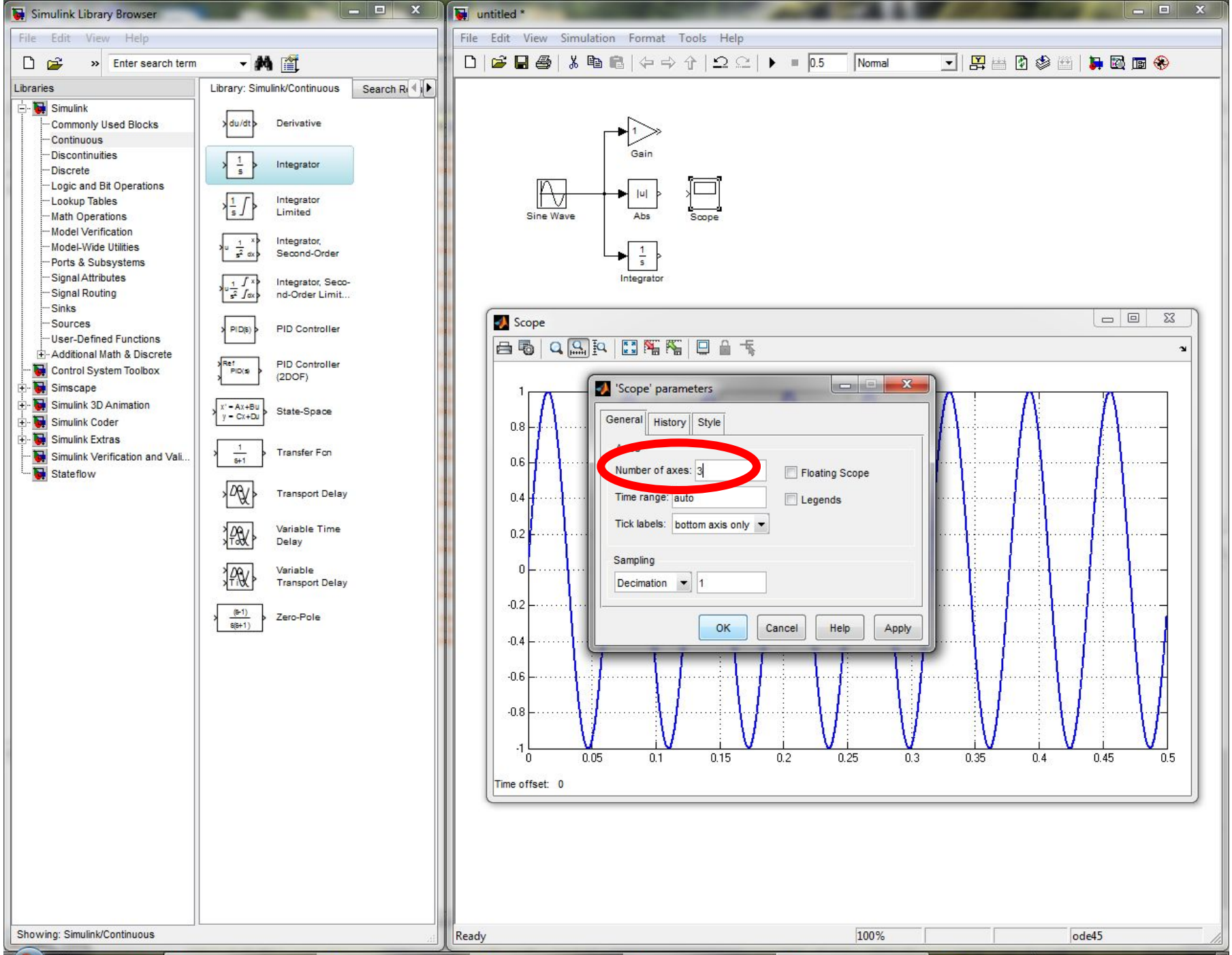
Simulink Library Browser
File Edit View Help
Enter search term
Libraries
Simulink
Commonly Used Blocks
Continuous
Discontinuities
Discrete
Logic and Bit Operations
Lookup Tables
Math Operations
Model Verification
Model-Wide Utilities
Ports & Subsystems
Signal Attributes
Signal Routing
Sinks
Sources
User-Defined Functions
Additional Math & Discrete
Control System Toolbox
Simscape
Simulink 3D Animation
Simulink Coder
Simulink Extras
Simulink Verification and Vali...
Stateflow
Library: Simulink/Continuous
Derivative
Integrator
Integrator Limited
Integrator, Second-Order
Integrator, Second-Order Limit...
PID Controller
PID Controller (2DOF)
State-Space
Transfer Fcn
Transport Delay
Variable Time Delay
Variable Transport Delay
Zero-Pole
Showing: Simulink/Continuous
untitled *
File Edit View Simulation Format Tools Help
0.5
Normal
Gain
Sine Wave
Abs
Scope
Integrator
Scope
'Scope' parameters
General
History
Style
Number of axes: 3
Floating Scope
Time range: auto
Legends
Tick labels: bottom axis only
Sampling
Decimation
1
OK
Cancel
Help
Apply
Time offset: 0
Ready
100%
ode45
MATLAB R2012a
Simulink Library Bro...
untitled *
Scope
'Scope' parameters
EN
15:09

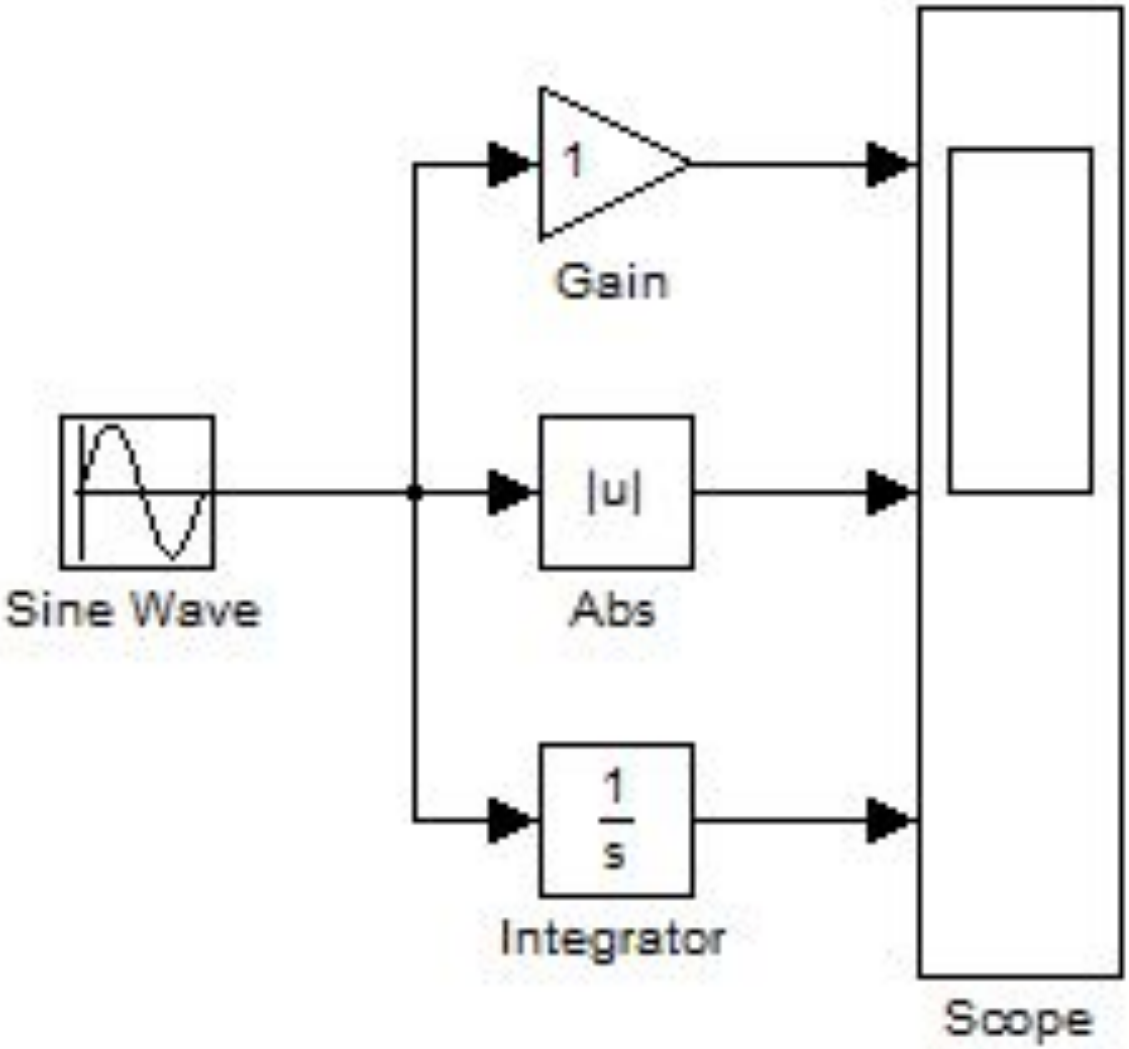
1
Gain
|u|
Abs
1
s
Integrator
Sine Wave
Scope

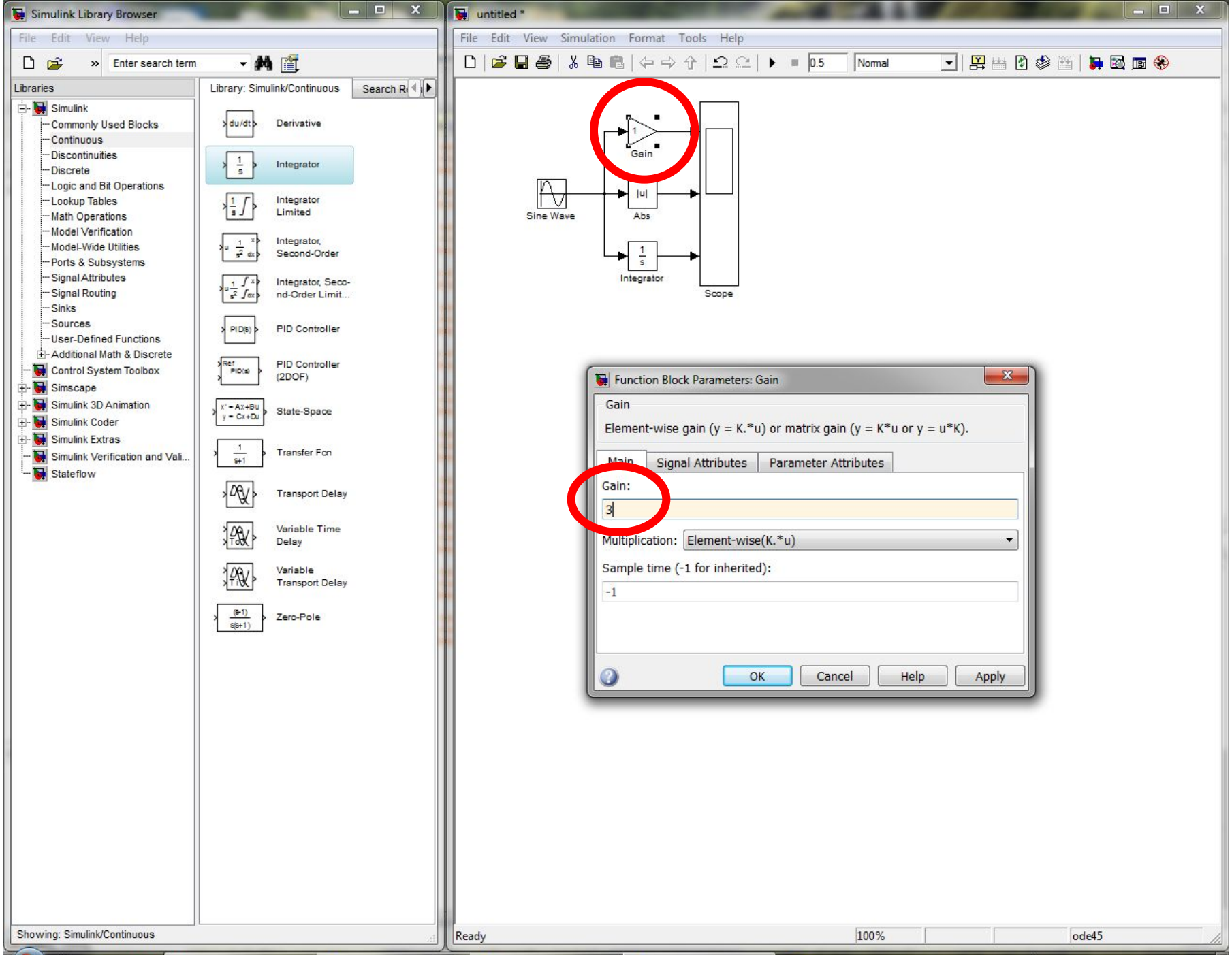
Simulink Library Browser
File Edit View Help
Enter search term
Libraries
Simulink
Commonly Used Blocks
Continuous
Discontinuities
Discrete
Logic and Bit Operations
Lookup Tables
Math Operations
Model Verification
Model-Wide Utilities
Ports & Subsystems
Signal Attributes
Signal Routing
Sinks
Sources
User-Defined Functions
Additional Math & Discrete
Control System Toolbox
Simscape
Simulink 3D Animation
Simulink Coder
Simulink Extras
Simulink Verification and Vali...
Stateflow
Library: Simulink/Continuous
Derivative
Integrator
Integrator Limited
Integrator, Second-Order
Integrator, Second-Order Limit...
PID Controller
PID Controller (2DOF)
State-Space
Transfer Fcn
Transport Delay
Variable Time Delay
Variable Transport Delay
Zero-Pole
Showing: Simulink/Continuous
untitled *
File Edit View Simulation Format Tools Help
0.5
Normal
Gain
Sine Wave
Abs
Integrator
Scope
Function Block Parameters: Gain
Gain
Element-wise gain (y = K.*u) or matrix gain (y = K*u or y = u*K).
Main
Signal Attributes
Parameter Attributes
Gain:
3
Multiplication: Element-wise(K.*u)
Sample time (-1 for inherited):
-1
OK
Cancel
Help
Apply
Ready
100%
ode45
MATLAB R2012a
Simulink Library Bro...
untitled *
Function Block Para...
EN
15:10

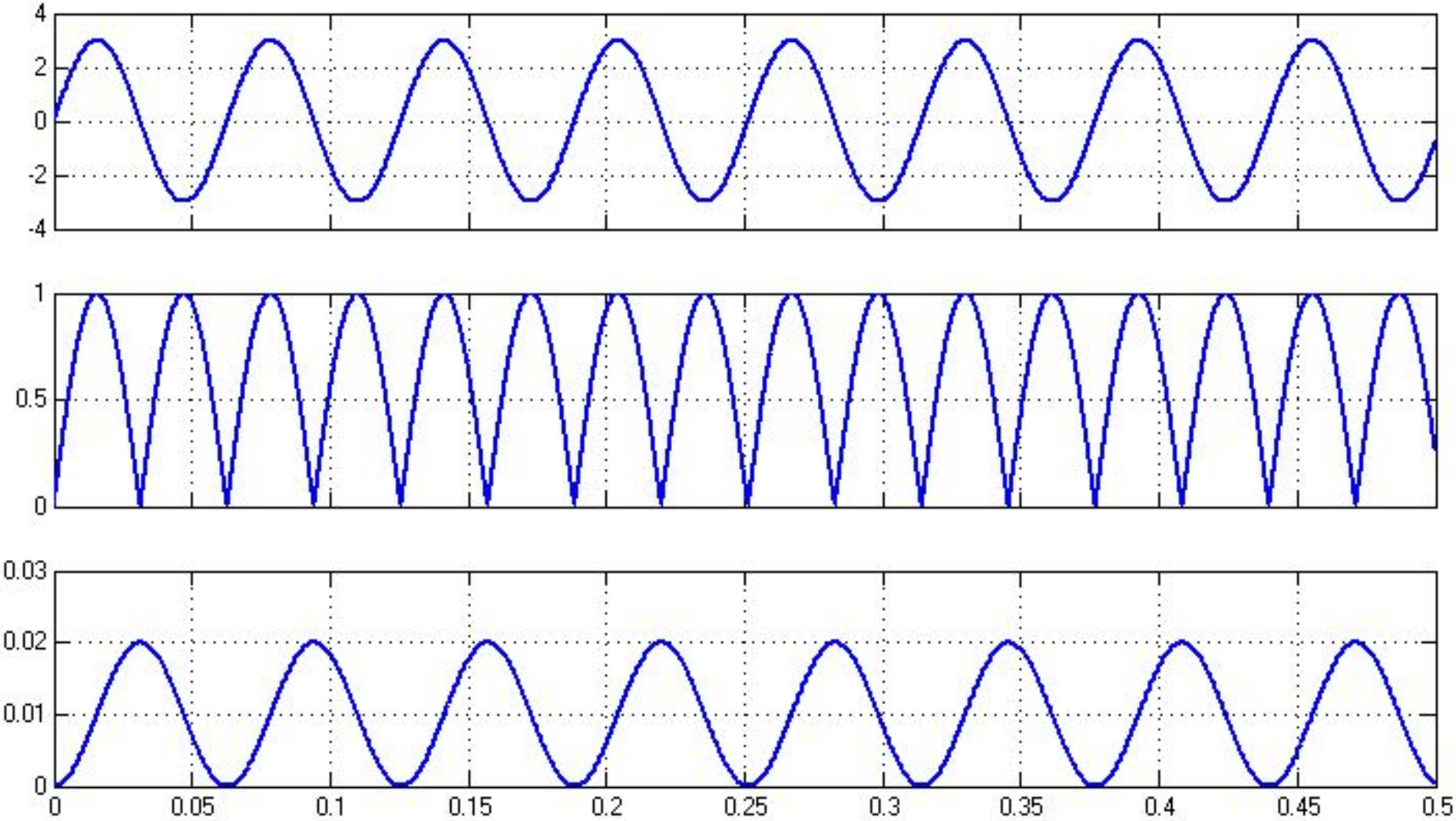
4
2
0
-2
-4
1
0.5
0
0.03
0.02
0.01
0
0
0.05
0.1
0.15
0.2
0.25
0.3
0.35
0.4
0.45
0.5

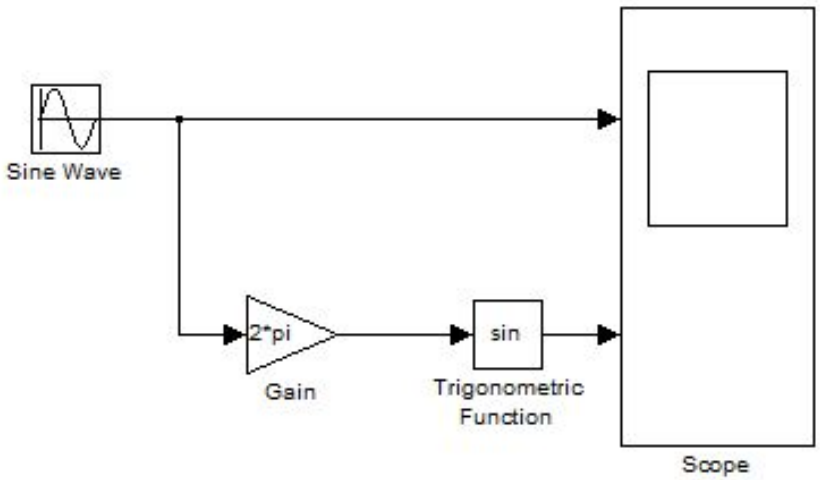
Sine Wave
2*pi
Gain
sin
Trigonometric
Function
Scope

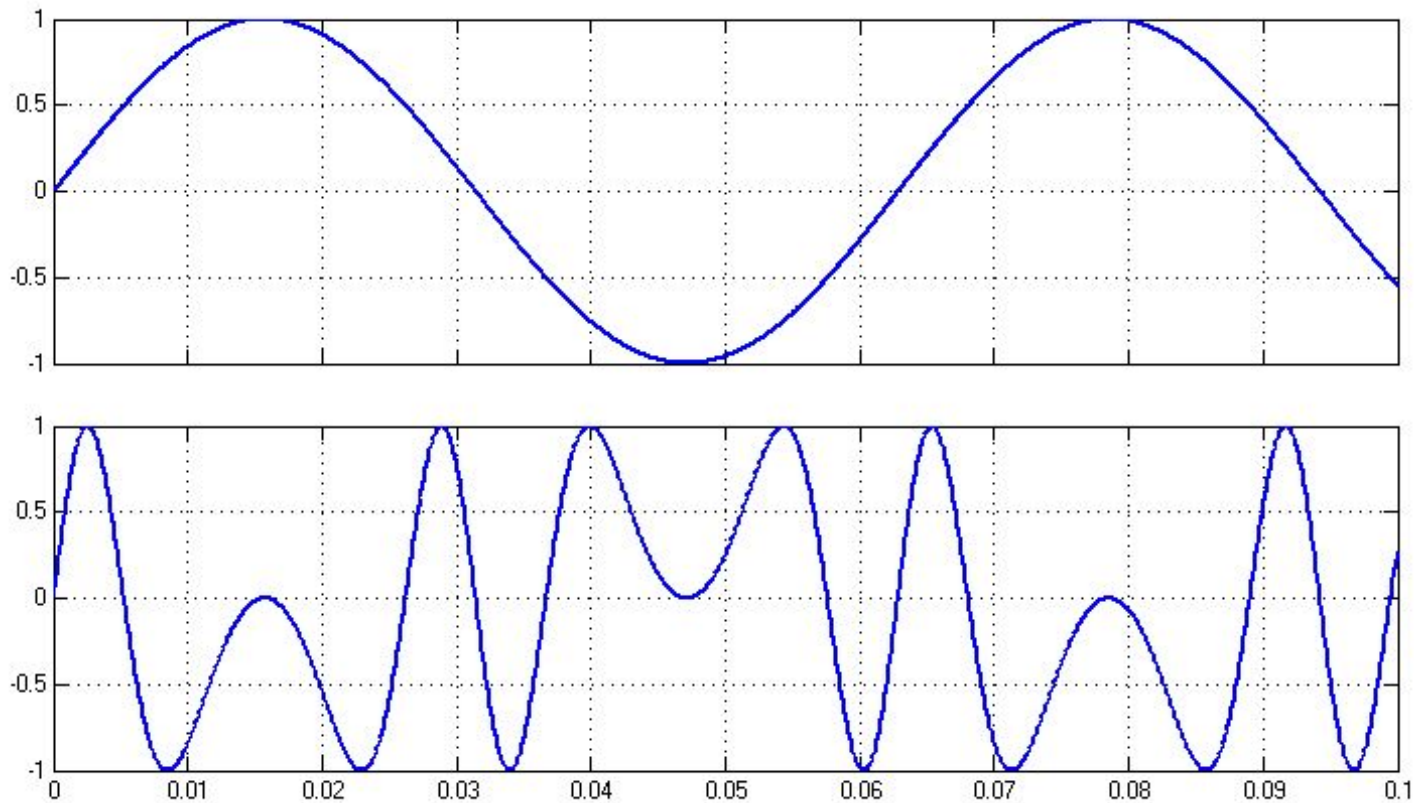
1
0.5
0
-0.5
-1
0
0.01
0.02
0.03
0.04
0.05
0.06
0.07
0.08
0.09
0.1

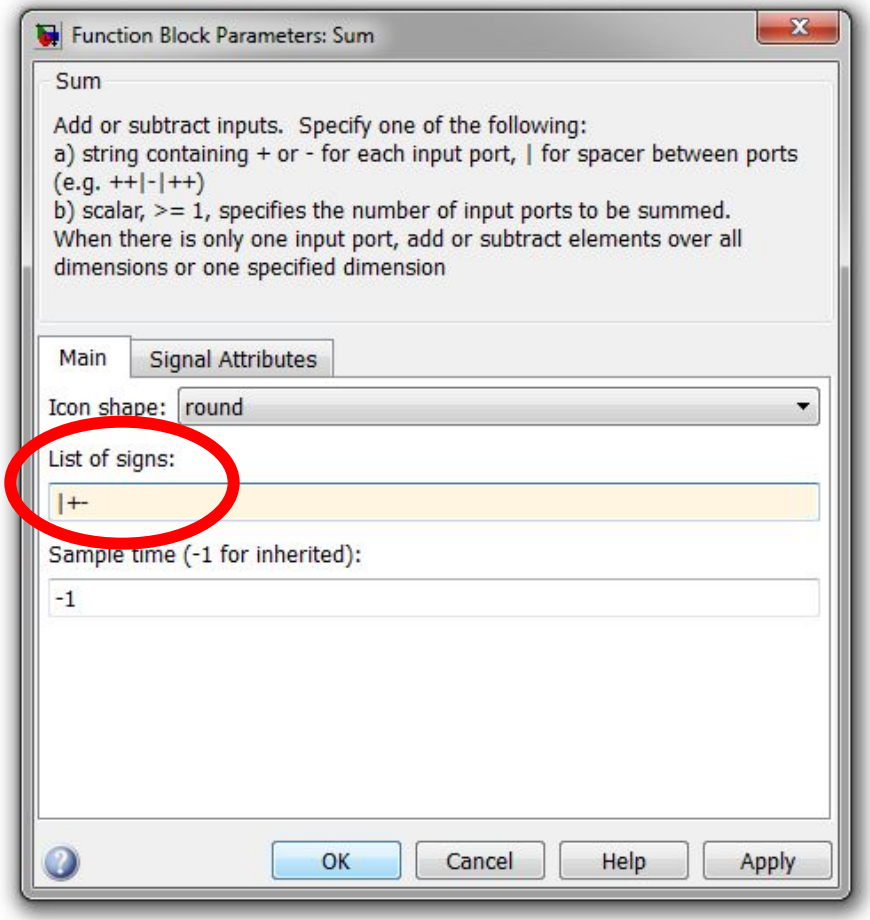
Function Block Parameters: Sum
Sum
Add or subtract inputs. Specify one of the following:
a) string containing + or - for each input port, | for spacer between ports (e.g. ++|-|++)
b) scalar, >= 1, specifies the number of input ports to be summed. When there is only one input port, add or subtract elements over all dimensions or one specified dimension
Main
Signal Attributes
Icon shape:
round
List of signs:
|+-
Sample time (-1 for inherited):
-1
OK
Cancel
Help
Apply

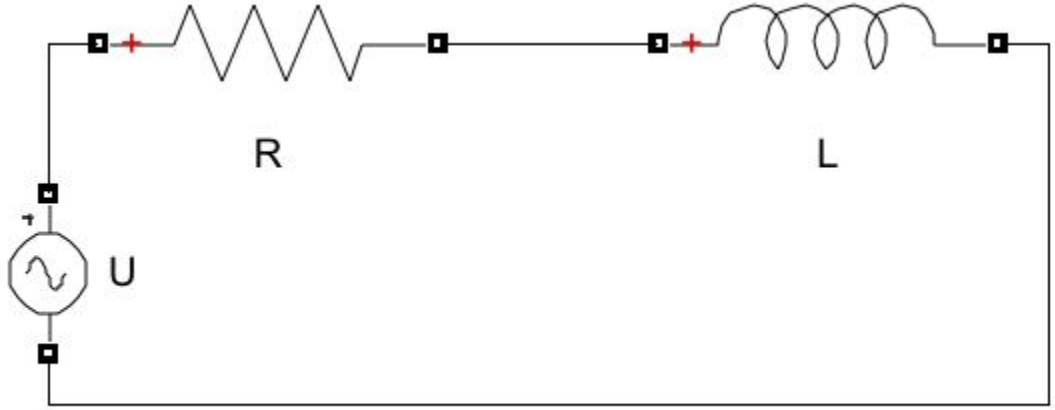

$$u(t) = e(t) + i(t) \cdot R$$

$$u(t) = e(t) + i(t) \cdot R$$
$$u(t) = e(t) + i(t) \cdot R$$
$$u(t) = e(t) + i(t) \cdot R$$
$$u(t) = e(t) + i(t) \cdot R$$
$$u(t) = e(t) + i(t) \cdot R$$
$$u(t) = e(t) + i(t) \cdot R$$
$$u(t) = e(t) + i(t) \cdot R$$
$$u(t) = e(t) + i(t) \cdot R$$
$$u(t) = e(t) + i(t) \cdot R$$
$$u(t) = e(t) + i(t) \cdot R$$

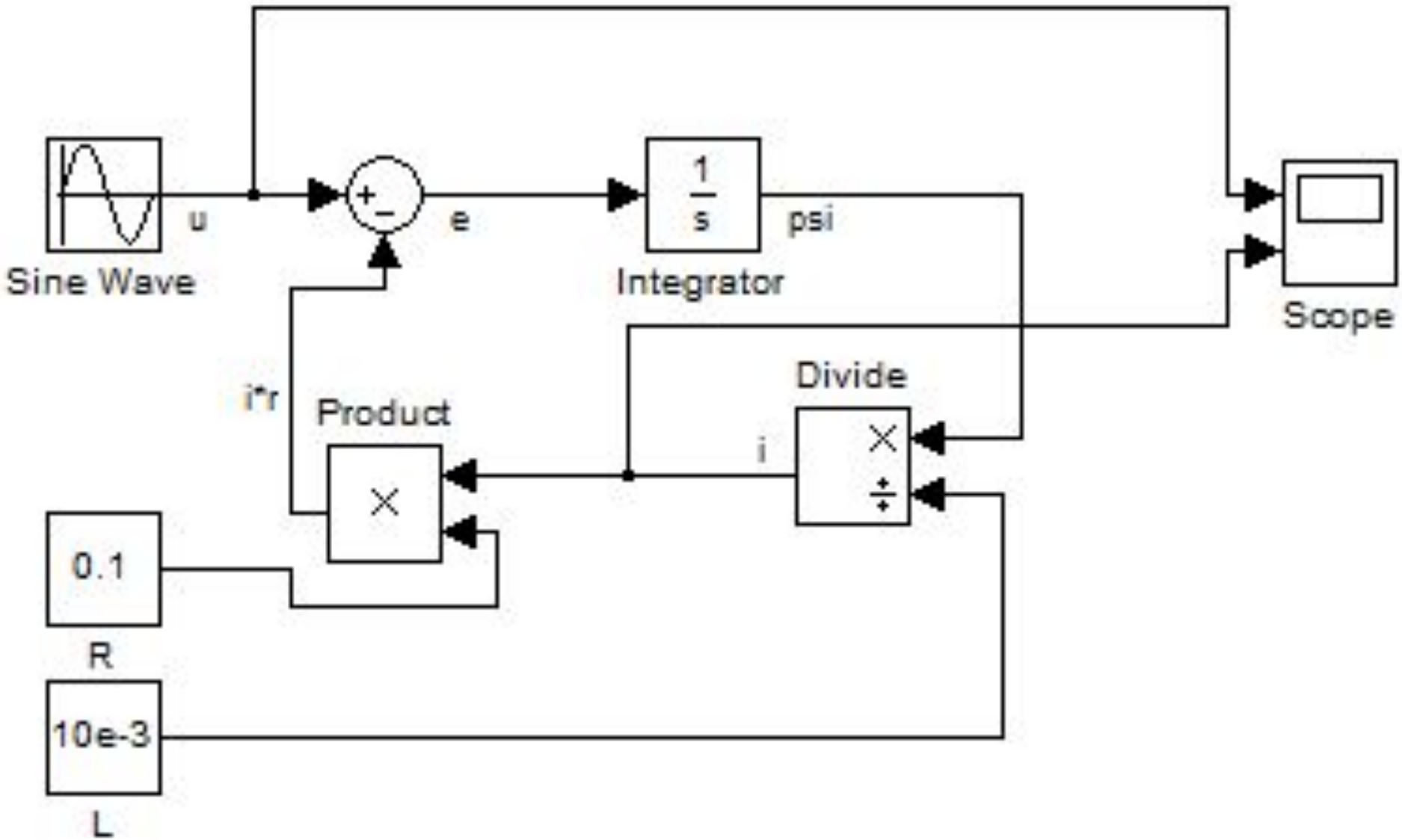
Sine Wave
u
e
1
s
Integrator
psi
Scope
i*r
Product
Divide
i
0.1
R
10e-3
L

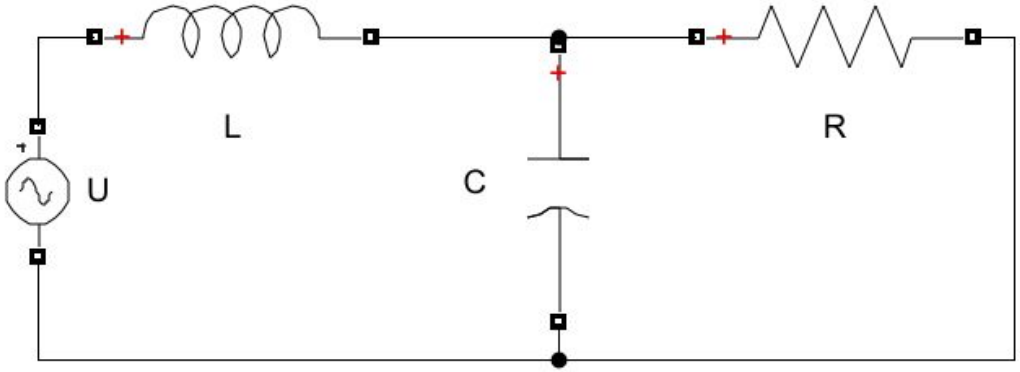

$$u(t) = e(t) + i(t) \cdot R$$

$$u(t) = e(t) + i(t) \cdot R$$

$$u(t) = e(t) + i(t) \cdot R$$

$$u(t) = e(t) + i(t) \cdot R$$
$$u(t) = e(t) + i(t) \cdot R$$
$$u(t) = e(t) + i(t) \cdot R$$
$$u(t) = e(t) + i(t) \cdot R$$
$$u(t) = e(t) + i(t) \cdot R$$

$$u(t) = e(t) + i(t) \cdot R$$

$$u(t) = e(t) + i(t) \cdot R$$

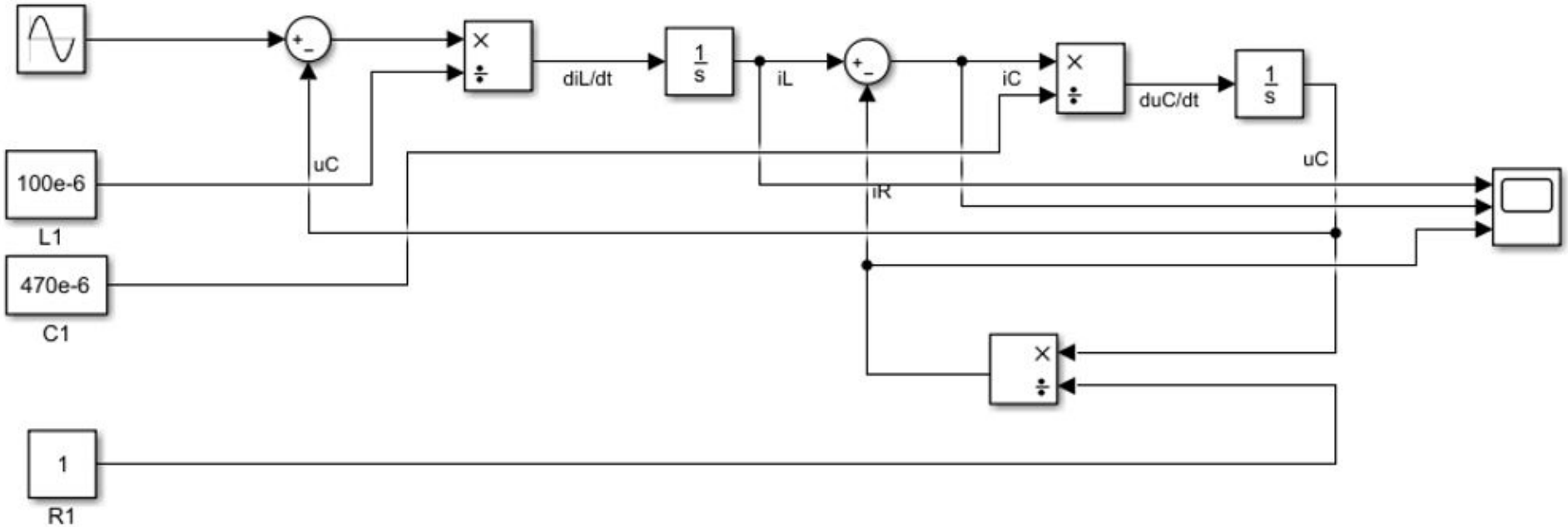
diL/dt
1
s
iL
iC
duC/dt
1
s
uC
uC
iR
100e-6
L1
470e-6
C1
1
R1

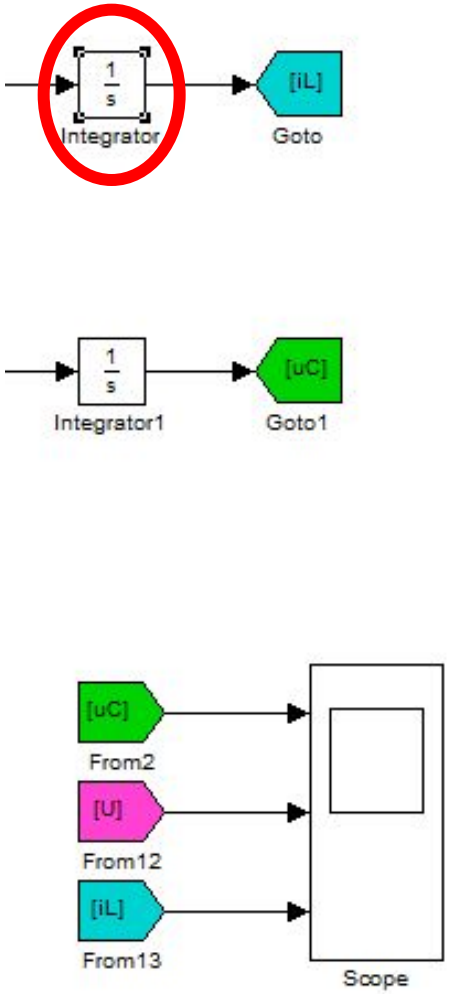

Function Block Parameters: Integrator

Integrator

Continuous-time integration of the input signal.

Parameters

External reset: none

Initial condition source: internal

Initial condition:

0

☑ Limit output

Upper saturation limit:

inf

Lower saturation limit:

0

☐ Show saturation port

☐ Show state port

Absolute tolerance:

auto

☐ Ignore limit and reset when linearizing

☑ Enable zero-crossing detection

State Name: (e.g., 'position')

''

OK | Cancel | Help | Apply

Компьютерные технологии при разработке и проектировании электрооборудования автономных объектов

Лабораторная работа 1

Модель понижающего регулятора напряжения в среде Simulink

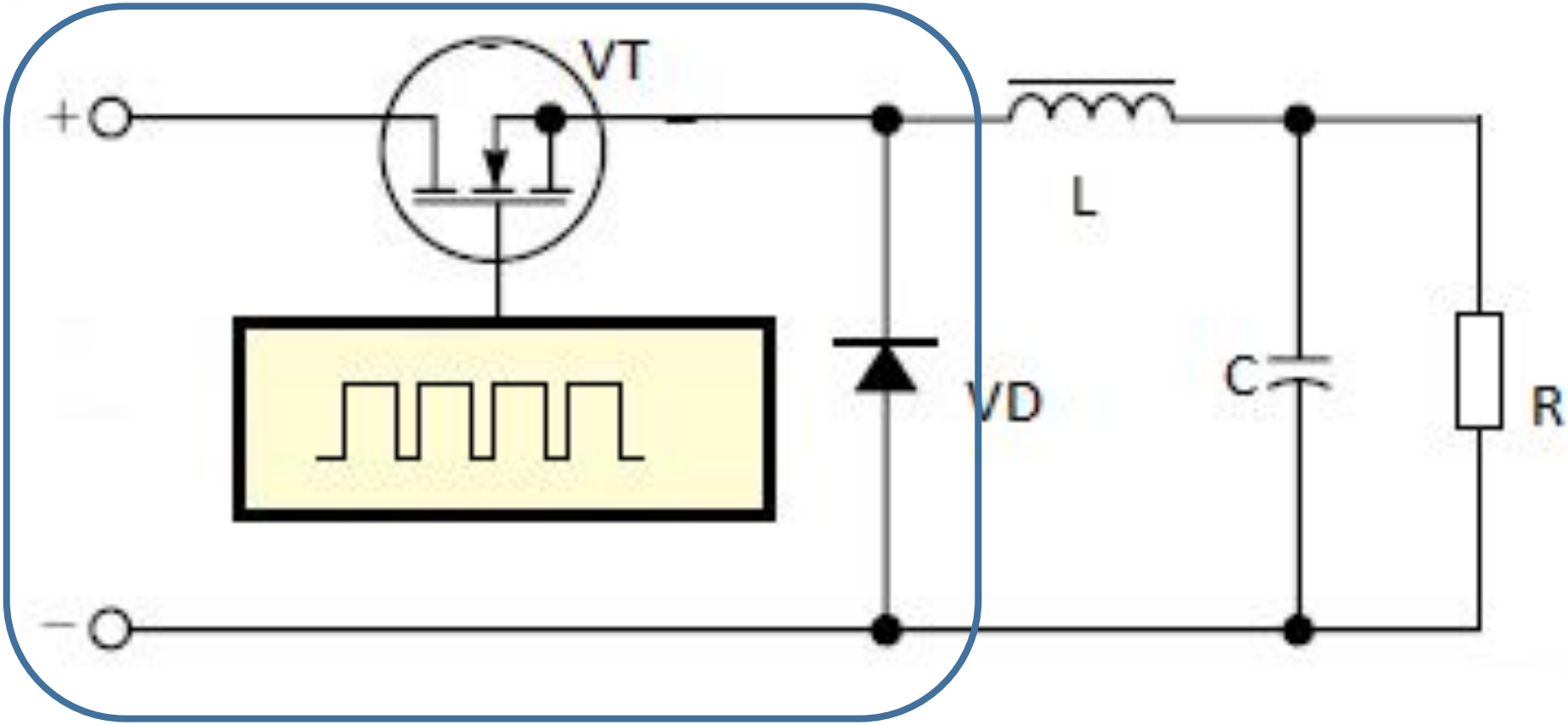
VT
+
−
L
VD
C
R

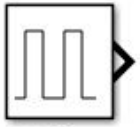

Pulse Generator1

Source Block Parameters: Pulse Generator1

Pulse Generator

Output pulses:

```
if (t >= PhaseDelay) && Pulse is on
  Y(t) = Amplitude
else
  Y(t) = 0
end
```

Pulse type determines the computational technique used.

Time-based is recommended for use with a variable step solver, while Sample-based is recommended for use with a fixed step solver or within a discrete portion of a model using a variable step solver.

Parameters

Pulse type: Time based

Time (t): Use simulation time

Amplitude:

50

Period (secs):

5e-4

Pulse Width (% of period):

50

Phase delay (secs):

0

☑ Interpret vector parameters as 1-D

OK | Cancel | Help | Apply

№ вар.	1	2	3	4	5	6
U_{in}, В	30	40	50	30	40	50
f, Гц	350	300	250	250	300	350
$R_н$, Ом	3.3	3.9	4.7	5.6	6.8	8.2

№ вар.	7	8	9	10	11	12	13	14	15
U_{in}, В	60	70	80	60	70	80	90	100	110
f, Гц	350	300	250	250	300	350	350	300	250
$R_н$, Ом	3.3	3.9	4.7	5.6	6.8	8.2	5.6	6.8	8.2

U_{in} – входное напряжение регулятора; f – частота переключения ключа;
R – сопротивление нагрузки

$$L \geq \frac{R_н}{2f}(1 - D_{\min}).$$

D_{min} – минимальное значение коэффициента заполнения равное 0,1

$$2\pi \cdot f \cdot C_{out} R_н >> 1.$$

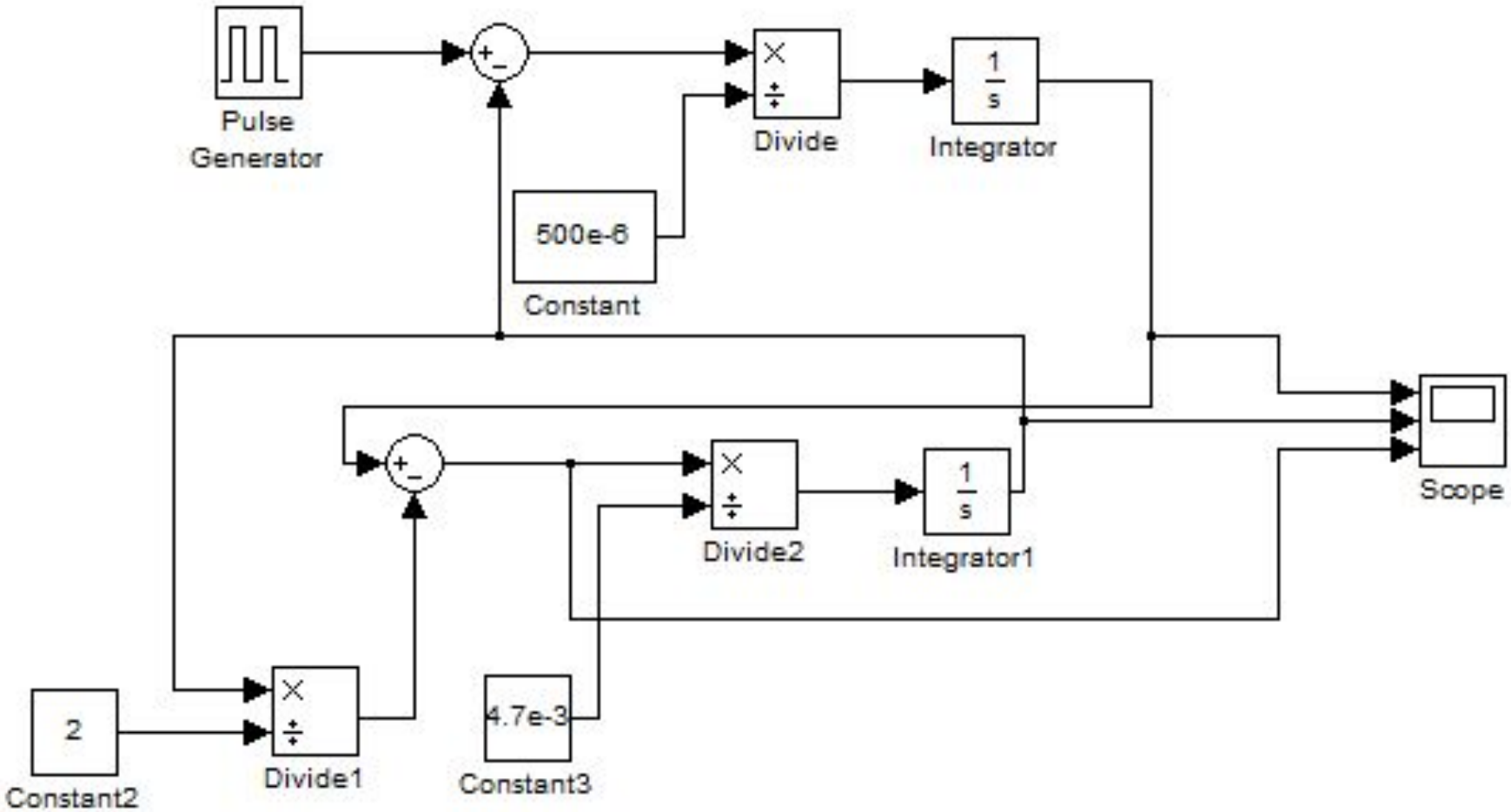
Pulse
Generator
Divide
1
s
Integrator
500e-6
Constant
Scope
Divide2
1
s
Integrator1
2
Constant2
Divide1
4.7e-3
Constant3

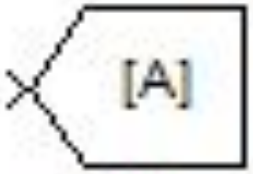

Goto

From

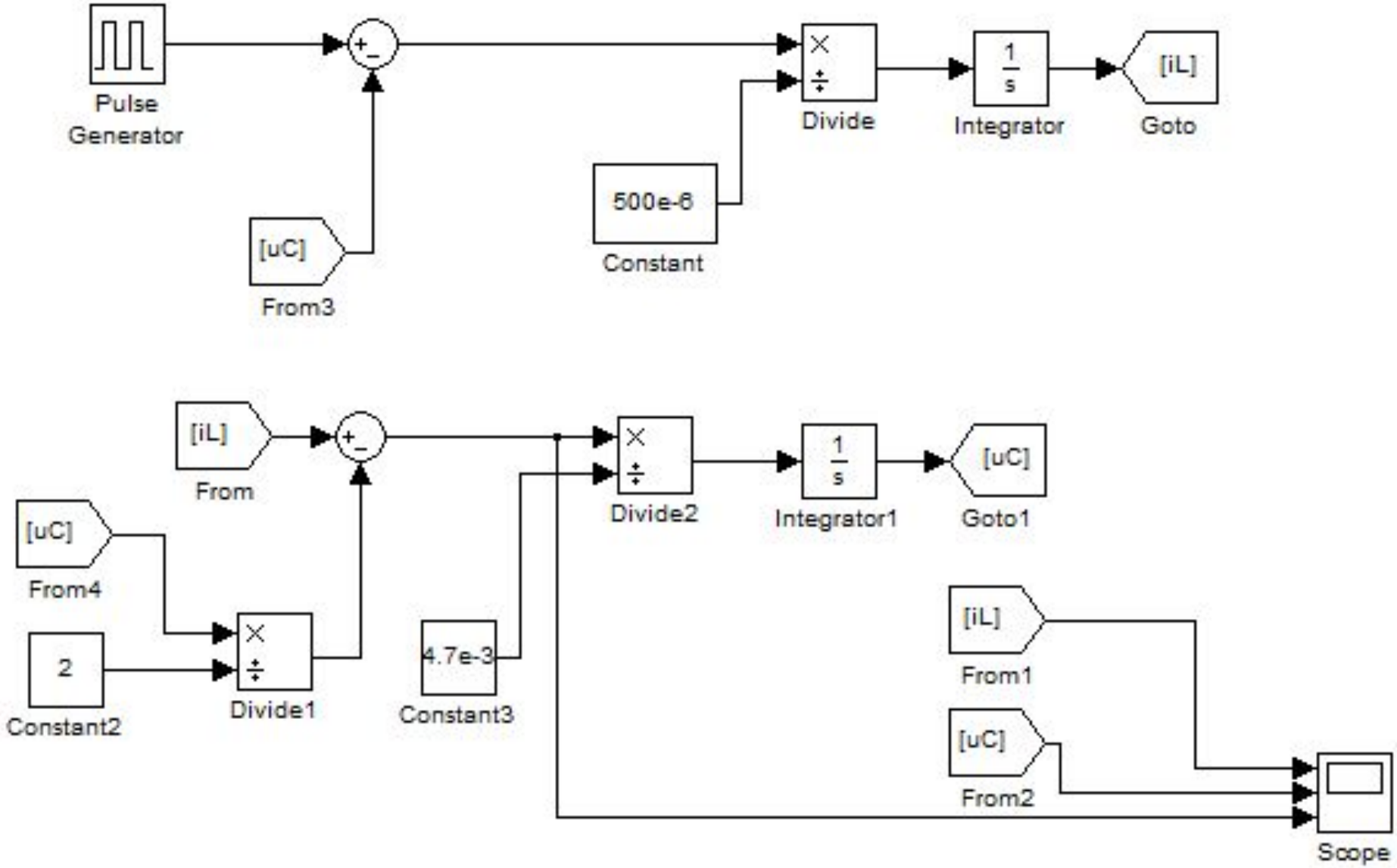
Pulse
Generator
[uC]
From3
500e-6
Constant
Divide
1
s
Integrator
[iL]
Goto
[iL]
From
[uC]
From4
2
Constant2
Divide1
4.7e-3
Constant3
Divide2
1
s
Integrator1
[uC]
Goto1
[iL]
From1
[uC]
From2
Scope

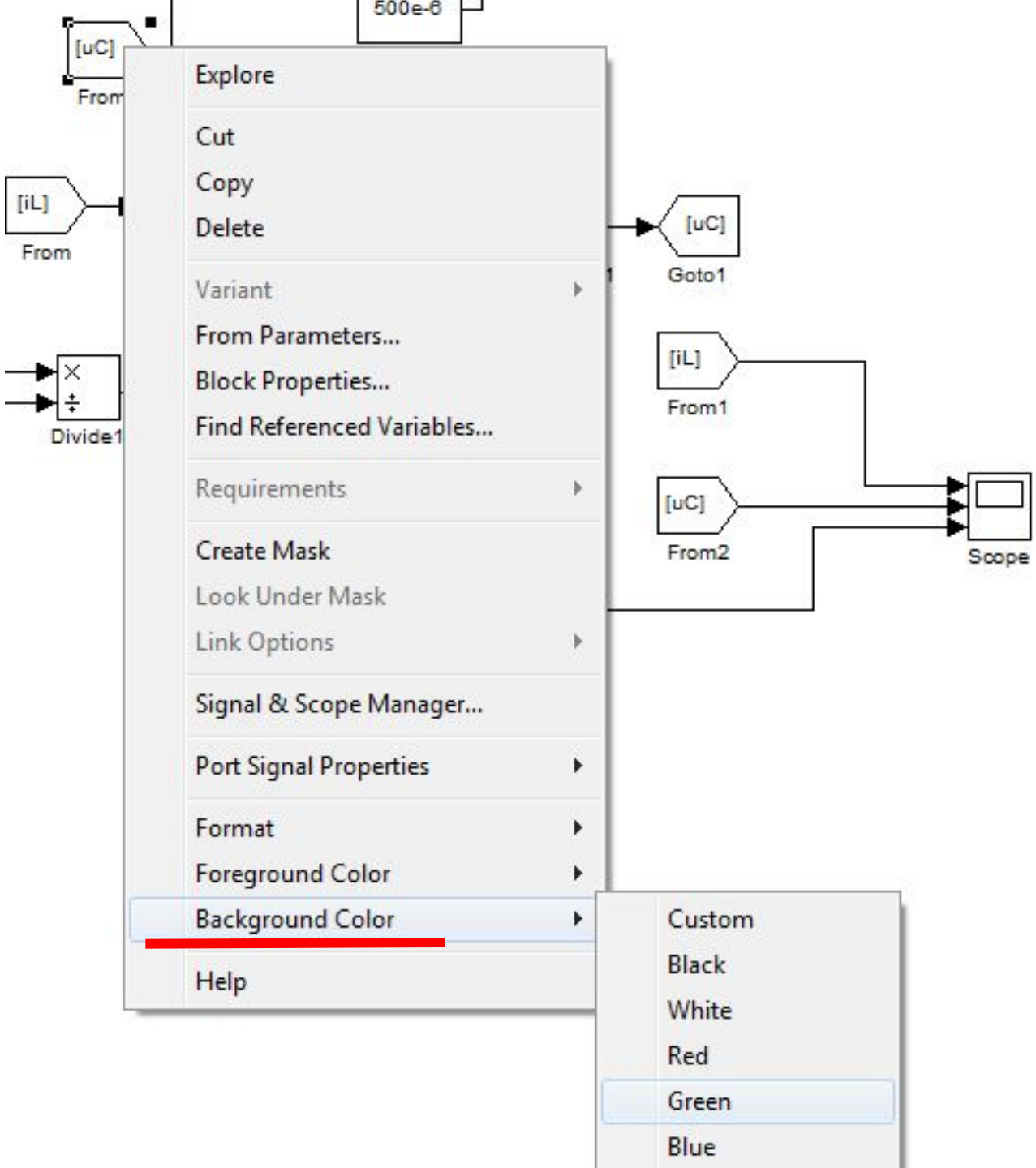
500e-6
[uC]
From
[iL]
From
Divide1
[uC]
Goto1
[iL]
From1
[uC]
From2
Scope
Explore
Cut
Copy
Delete
Variant
From Parameters...
Block Properties...
Find Referenced Variables...
Requirements
Create Mask
Look Under Mask
Link Options
Signal & Scope Manager...
Port Signal Properties
Format
Foreground Color
Background Color
Help
Custom
Black
White
Red
Green
Blue

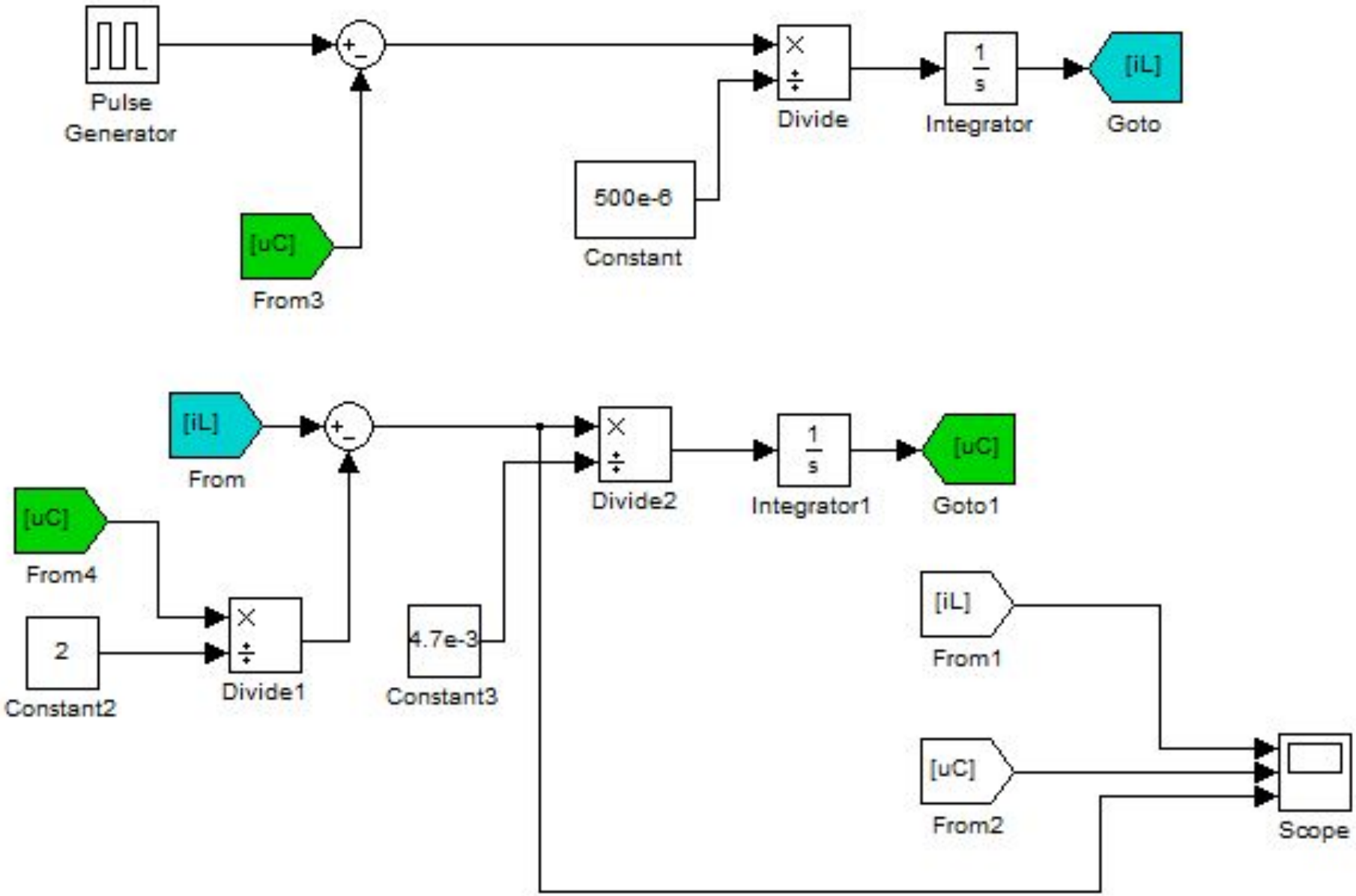
Pulse
Generator
[uC]
From3
500e-6
Constant
Divide
1
s
Integrator
[iL]
Goto
[iL]
From
[uC]
From4
2
Constant2
Divide1
4.7e-3
Constant3
Divide2
1
s
Integrator1
[uC]
Goto1
[iL]
From1
[uC]
From2
Scope

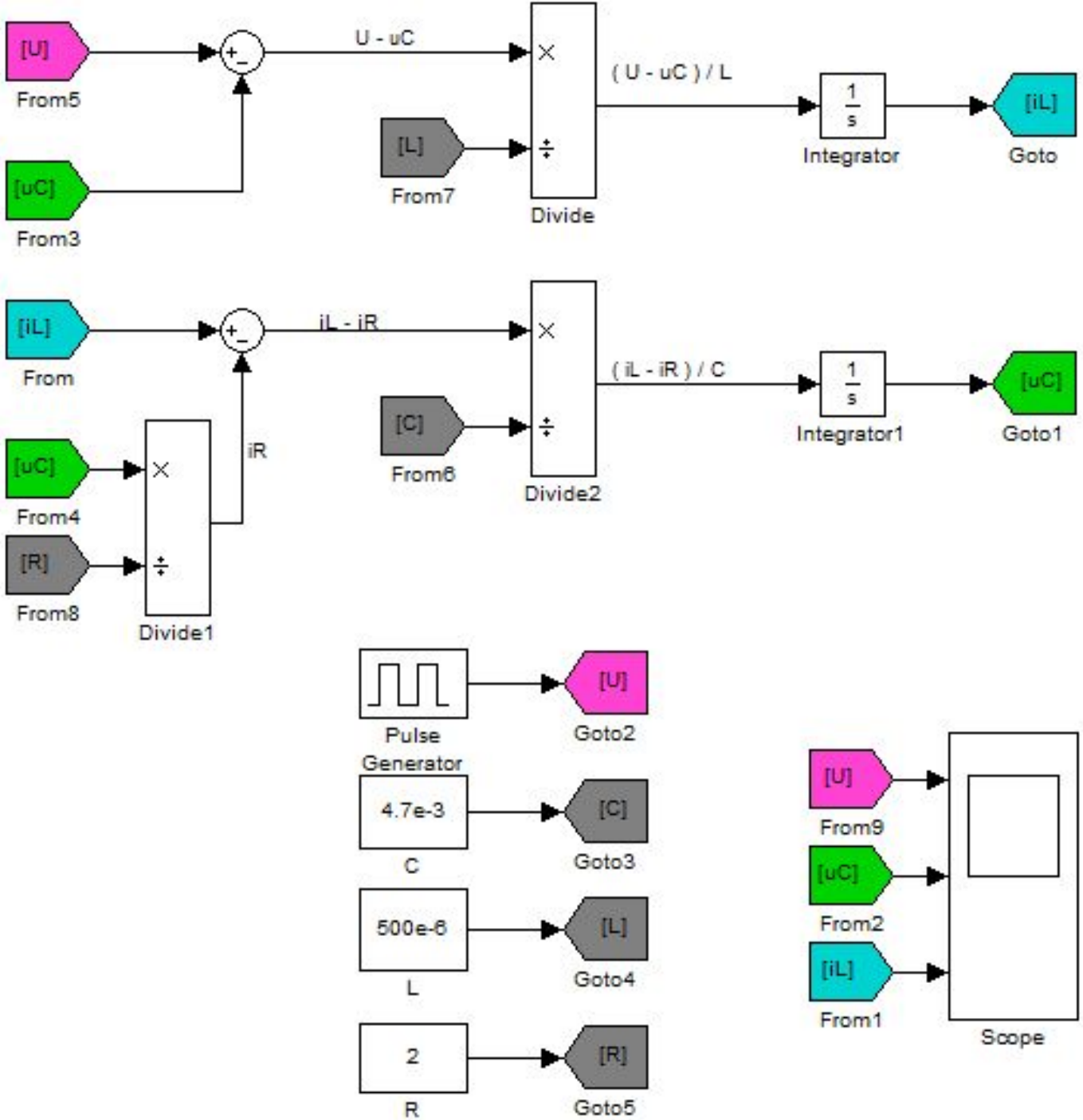
[U]
From5
[uC]
From3
U - uC
[L]
From7
Divide
(U - uC) / L
1
s
Integrator
[iL]
Goto
[iL]
From
iL - iR
[uC]
From4
[R]
From8
Divide1
iR
[C]
From6
Divide2
(iL - iR) / C
Integrator1
[uC]
Goto1
Pulse
Generator
[U]
Goto2
4.7e-3
C
[C]
Goto3
500e-6
L
[L]
Goto4
2
R
[R]
Goto5
[U]
From9
[uC]
From2
[iL]
From1
Scope

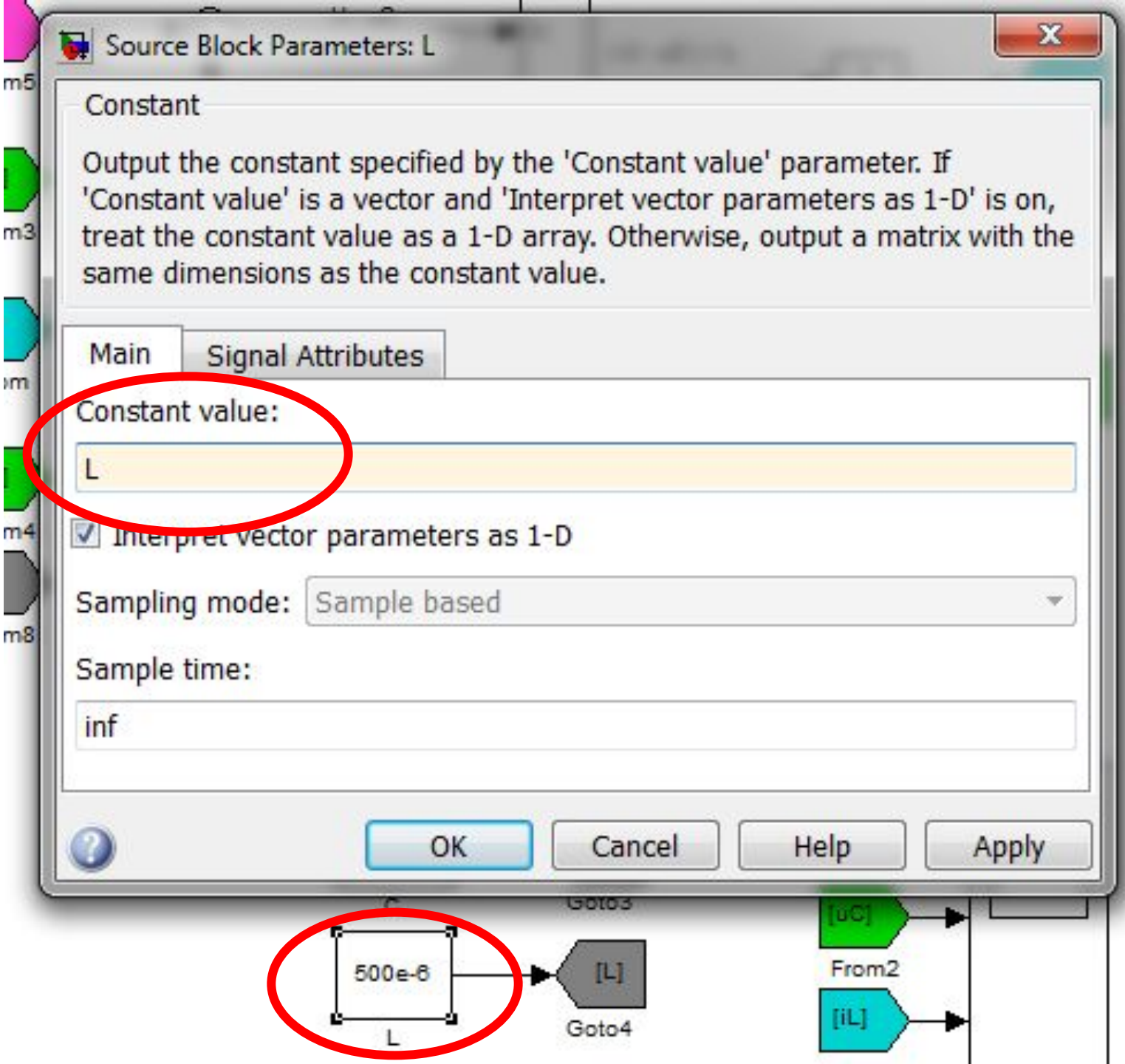
Source Block Parameters: L
Constant
Output the constant specified by the 'Constant value' parameter. If 'Constant value' is a vector and 'Interpret vector parameters as 1-D' is on, treat the constant value as a 1-D array. Otherwise, output a matrix with the same dimensions as the constant value.
Main
Signal Attributes
Constant value:
L
Interpret vector parameters as 1-D
Sampling mode:
Sample based
Sample time:
inf
OK
Cancel
Help
Apply
500e-6
L
[L]
Goto4
[uC]
From2
[iL]

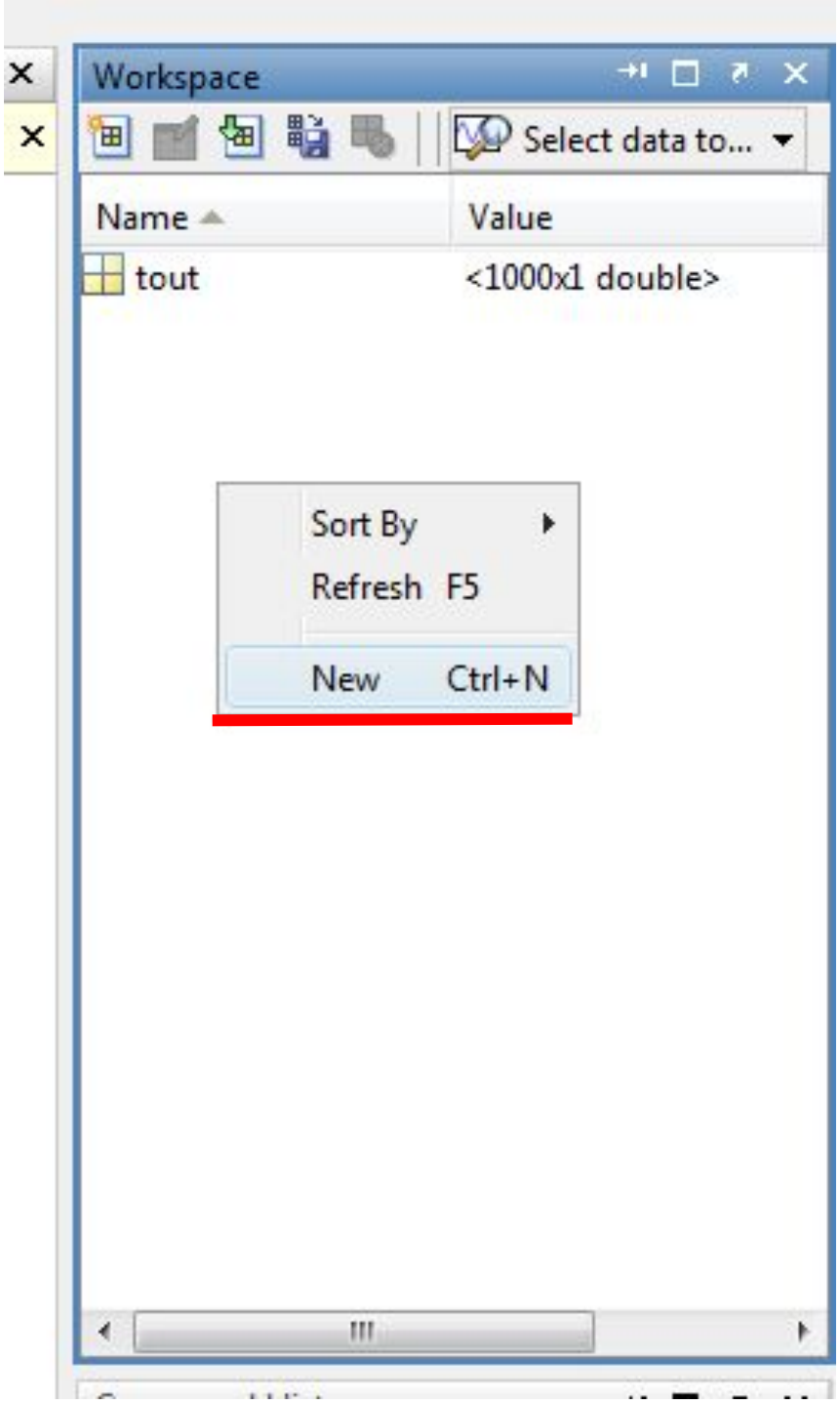
Workspace
Select data to...
Name
Value
tout
<1000x1 double>
Sort By
Refresh F5
New Ctrl+N

Variable Editor - L

Stack: Base

No valid plots for: L

L <1x1 double>

	1	2	3	4	5	6	7	8	9
1	0								
2									
3									
4									
5									
6									
7									
8									
9									
10									
11									
12									
13									
14									
15									
16									
17									
18									
19									
20									
21									

Workspace

No valid p

Name	Value
L	0
tou	<1000x1 doub

Command History

%-- 12.03.2019 13:36 --%

%-- 19.03.2019 13:46 --%

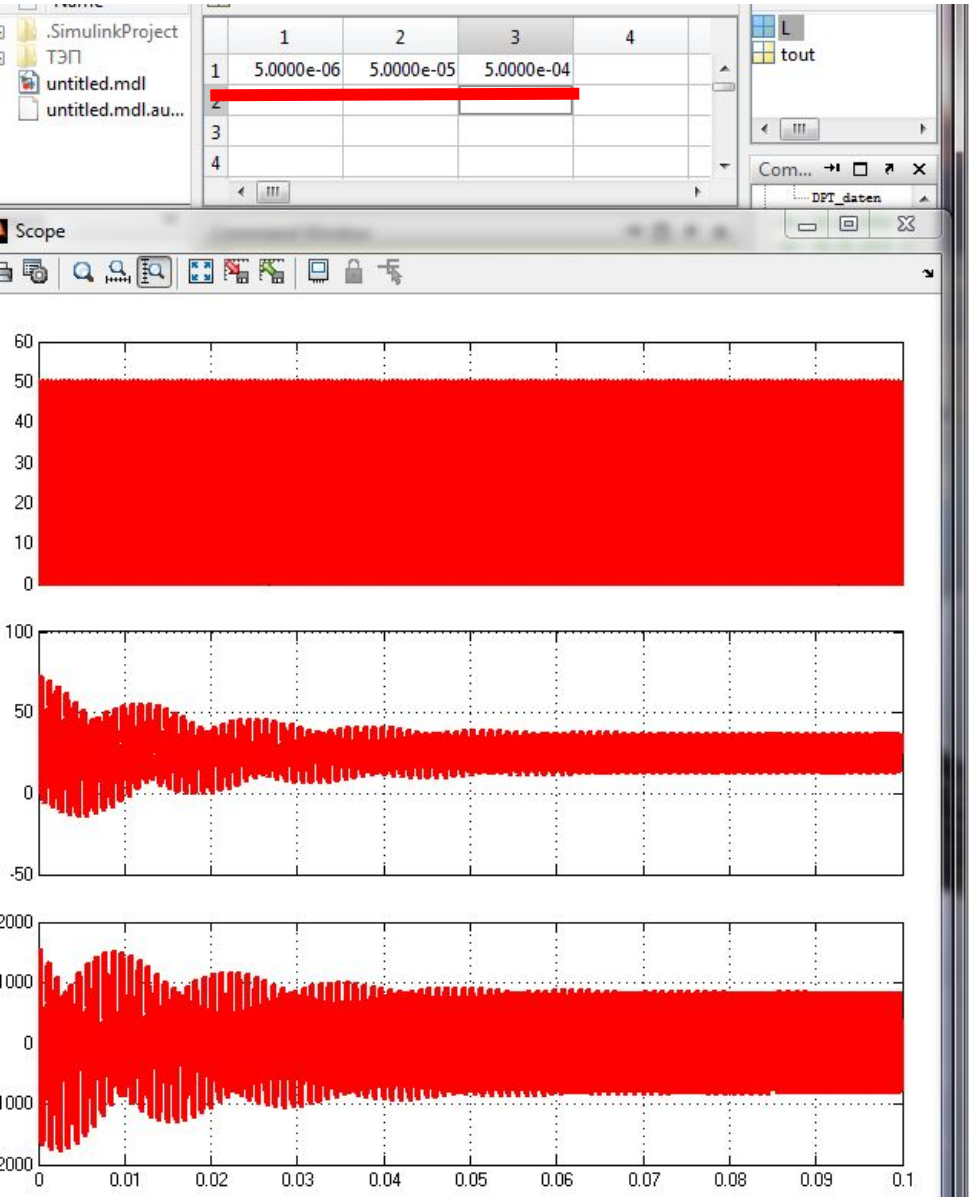
.SimulinkProject
ТЭП
untitled.mdl
untitled.mdl.au...
1 2 3 4
1 5.0000e-06 5.0000e-05 5.0000e-04
L
tout
Com...
DPT_daten
Scope
60 50 40 30 20 10 0
100 50 0 -50
2000 1000 0 -1000 -2000
0 0.01 0.02 0.03 0.04 0.05 0.06 0.07 0.08 0.09 0.1

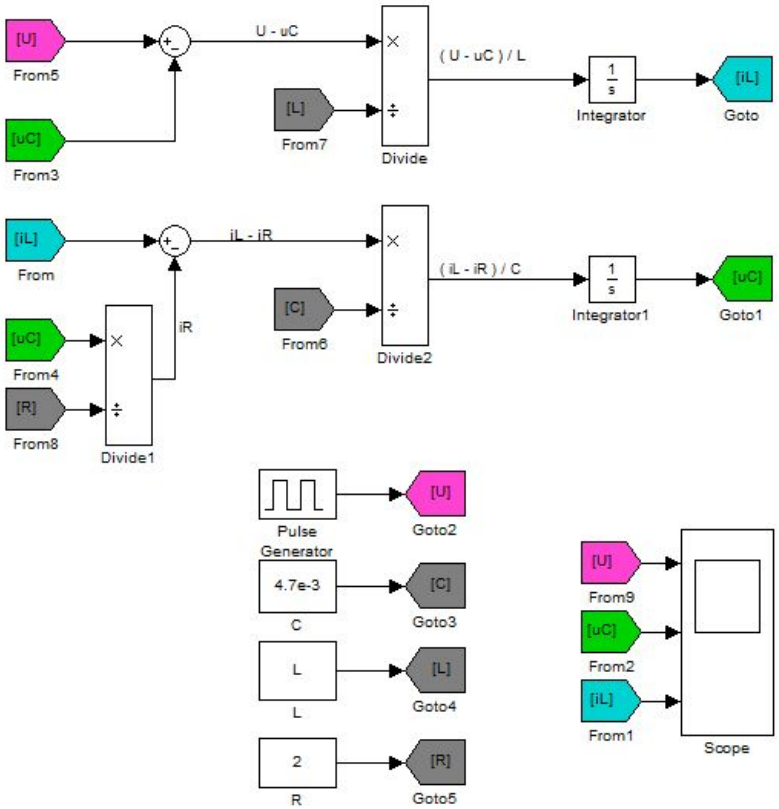
[U]
From5
[uC]
From3
U - uC
[L]
From7
Divide
(U - uC) / L
1/s
Integrator
[iL]
Goto
[iL]
From
[uC]
From4
[R]
From8
Divide1
iL - iR
iR
[C]
From6
Divide2
(iL - iR) / C
Integrator1
[uC]
Goto1
Pulse Generator
[U]
Goto2
4.7e-3
C
[C]
Goto3
L
L
[L]
Goto4
2
R
[R]
Goto5
[U]
From9
[uC]
From2
[iL]
From1
Scope

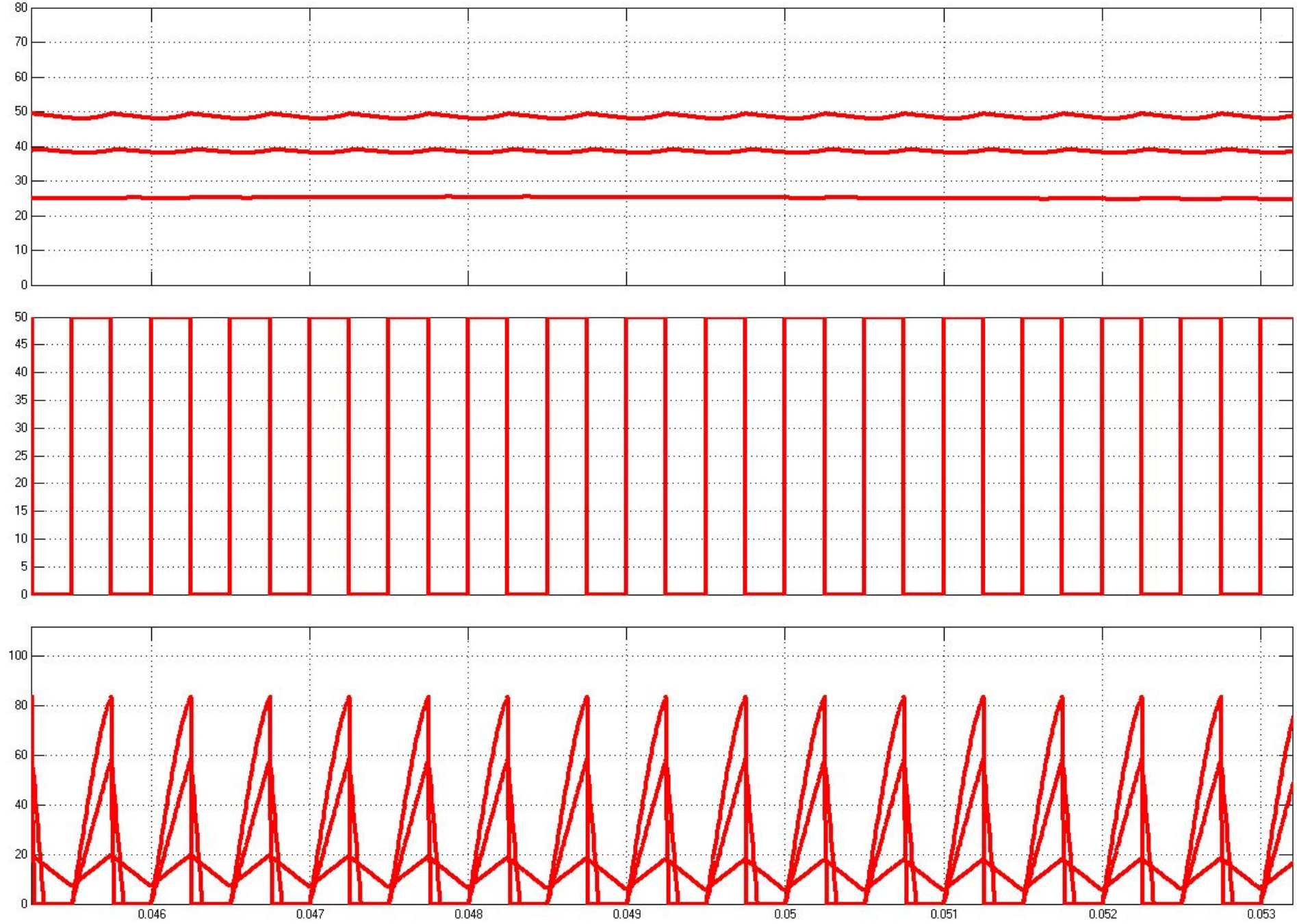
80
70
60
50
40
30
20
10
0
50
45
40
35
30
25
20
15
10
5
0
100
80
60
40
20
0
0.046
0.047
0.048
0.049
0.05
0.051
0.052
0.053

Simulink Library Browser

File Edit View Help

integrator

Libraries

- Simulink
  - Commonly Used Blocks
  - Continuous
  - Discontinuities
  - Discrete
  - Logic and Bit Operations
  - Lookup Tables
  - Math Operations
  - Model Verification
  - Model-Wide Utilities
  - Ports & Subsystems
  - Signal Attributes
  - Signal Routing
  - Sinks
  - Sources
  - User-Defined Functions
  - Additional Math & Discrete
- Control System Toolbox
- Simscape
- Simulink 3D Animation

Library: Simulink/Signal Routing

Found:

- Bus Assignment
- Bus Creator
- Bus Selector
- Data Store Memory
- Data Store Read
- Data Store Write
- Demux
- Environment Controller

Showing: Simulink/Signal Routing

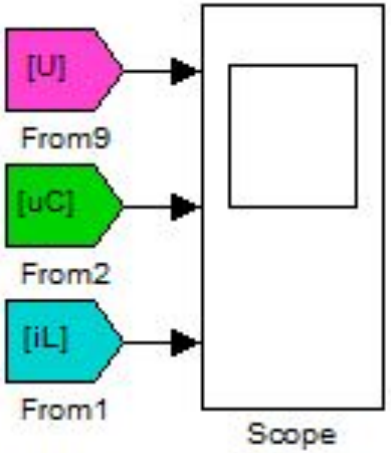

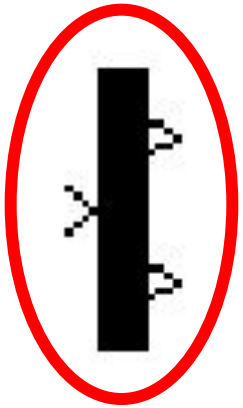

Function Block Parameters: Demux

Demux

Split vector signals into scalars or smaller vectors. Check 'Bus Selection Mode' to split bus signals.

Parameters

Number of outputs:

3

Display option: bar

Bus selection mode

OK Cancel Help Apply

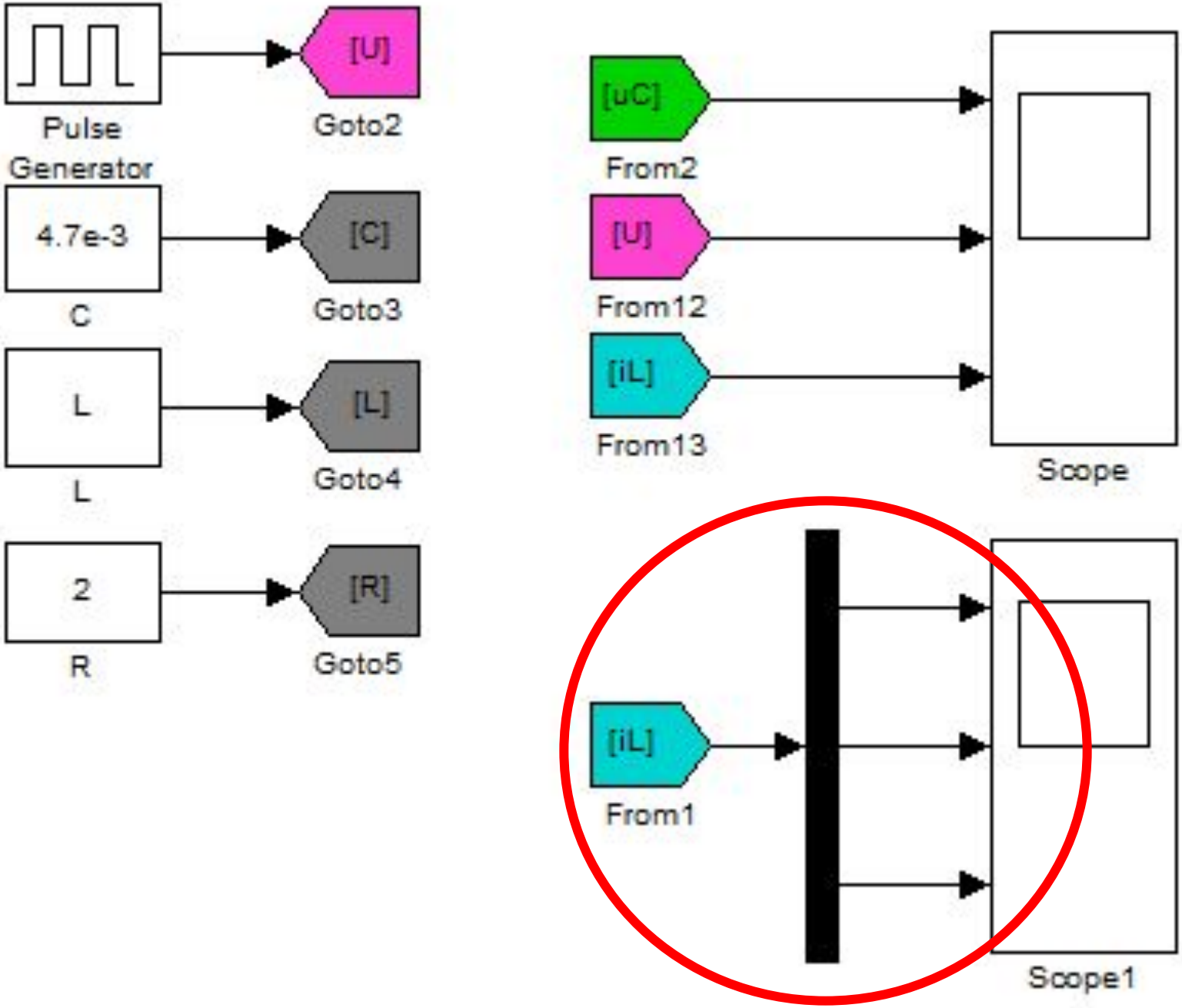
Pulse
Generator
[U]
Goto2
4.7e-3
C
[C]
Goto3
L
L
[L]
Goto4
2
R
[R]
Goto5
[uC]
From2
[U]
From12
[iL]
From13
Scope
[iL]
From1
Scope1

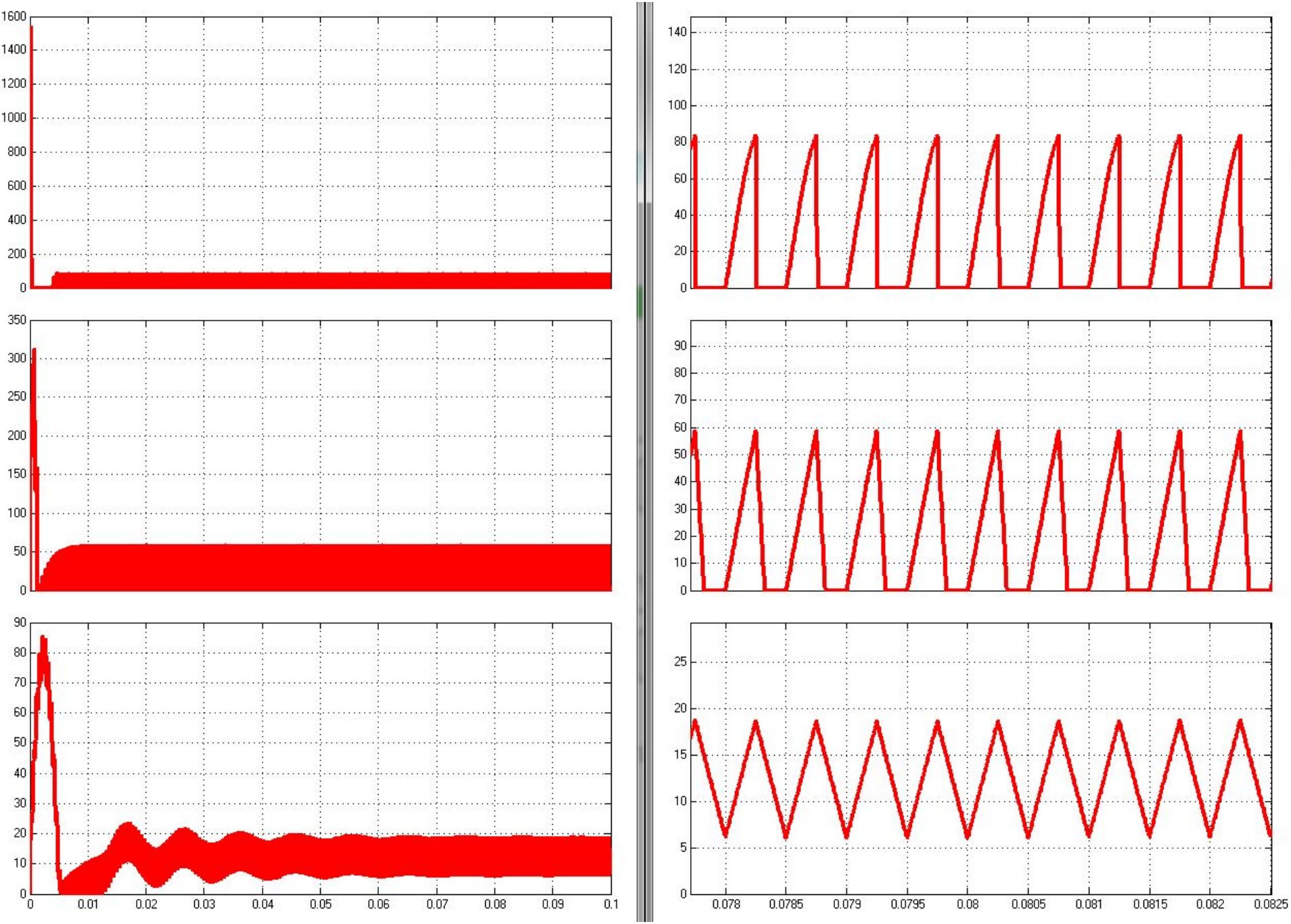
1600
1400
1200
1000
800
600
400
200
0
350
300
250
200
150
100
50
0
90
80
70
60
50
40
30
20
10
0
0
0.01
0.02
0.03
0.04
0.05
0.06
0.07
0.08
0.09
0.1
140
120
100
80
60
40
20
0
90
80
70
60
50
40
30
20
10
0
25
20
15
10
5
0
0.078
0.0785
0.079
0.0795
0.08
0.0805
0.081
0.0815
0.082
0.0825

Задание на защиту ЛР1

1. Сформировать мат. модель понижающего регулятора напряжения с данными ранее параметрами для каждой бригады
2. Каждый из 2х человек в бригаде должен сделать индивидуальное задание, а именно:

- Параметрически изменяя индуктивность в пределах 10 … 190 % (минимум 5 значений) получить осциллограммы тока дросселя и напряжения на нагрузке

- Параметрически изменяя емкость в пределах 10 … 190 % (минимум 5 значений) получить осциллограммы тока дросселя и напряжения на нагрузке

Полученные осциллограммы, а так же принцип работы модели каждый должен уметь пояснить!