# Электровоз ВЛ-10 КРП

Силовые схемы.

# Упрощенная схема работы электровоза на «С» соединении тяговых двигателей.

Упрощенная схема работы электровоза на " С " соединении тяговых двигателей

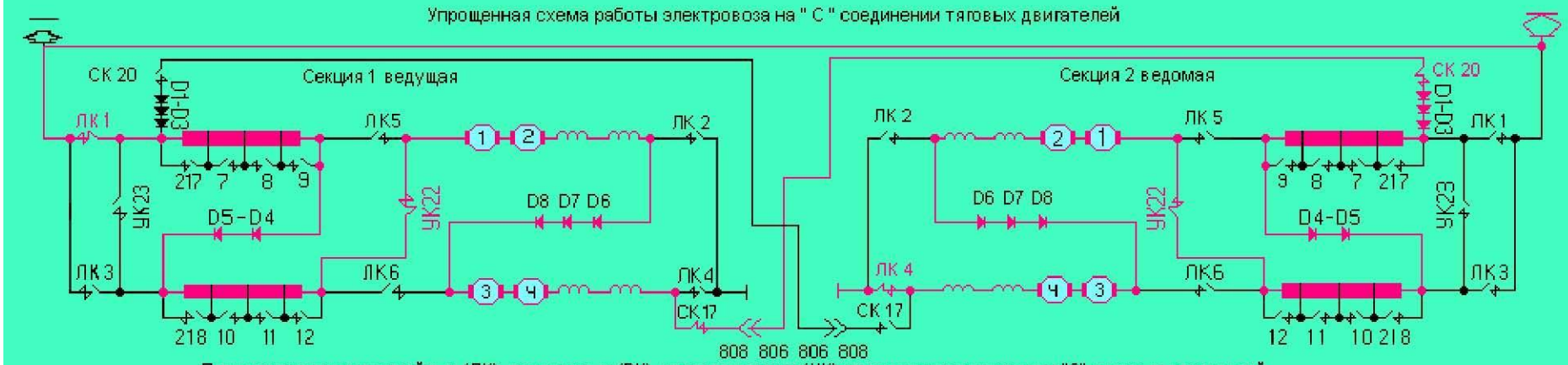


Порядок включения линейных (ЛК), реостатных (РК), уравнительных (УК) на сересном соединении "С" тяговых двигателей

Ведущая 1 секция

| № Поз | Линейные (ЛК) | | | | | | Реостатные (РК) | | | | | | | | | | УК | |
|---|---|---|---|---|---|---|---|---|---|---|---|---|---|---|---|---|---|---|
| | 1 | 2 | 3 | 4 | 5 | 6 | 217 | 7 | 8 | 9 | 218 | 10 | 11 | 12 | 22 | 17 | 20 | 23 | 24 |
| 1 | ● | | | | | | | | | | | | | | ● | ● | | | |
| 2 | ● | | | | | | | | | | | | | | ● | ● | | | |
| 3 | ● | | | | | | | | | ● | | | | | ● | ● | | | |
| 4 | ● | | | | | | | | | ● | | | | | ● | ● | | | |
| 5 | ● | | | | | | | | ● | ● | | | | | ● | ● | | | |
| 6 | ● | | | | | | | | ● | ● | | | | | ● | ● | | | |
| 7 | ● | | ● | | | | | | | | | | | | ● | ● | | | |
| 8 | ● | | ● | | ● | | | | | | | | | | ● | ● | | | |
| 9 | ● | | ● | | ● | | | | | | | | | | ● | ● | | | |
| 10 | ● | | ● | | ● | | | | | | | | | | ● | ● | | | |
| 11 | ● | | ● | | ● | | | | | ● | | | | | ● | ● | | | |
| 12 | ● | | ● | | ● | | | | | ● | | | | | ● | ● | | | |
| 13 | ● | | ● | | ● | | | | | ● | | | | ● | ● | ● | | | |
| 14 | ● | | ● | | ● | | | | ● | ● | | | | ● | ● | ● | | | |
| 15 | ● | | ● | | ● | | | | ● | ● | | | | ● | ● | ● | | | |
| 16 | ● | | ● | | ● | | | | ● | ● | | | ● | ● | ● | ● | | | |
| 17 | ● | | ● | | ● | | | | ● | ● | | | ● | ● | ● | ● | | | |
| 18 | ● | | ● | | ● | | | ● | ● | ● | | | ● | ● | ● | ● | | | |
| 19 | ● | | ● | | ● | | | ● | ● | ● | | | ● | ● | ● | ● | | | |
| 20 | ● | | ● | | ● | | | ● | ● | ● | | ● | ● | ● | ● | ● | | | |
| 21 | ● | | ● | | ● | | | ● | ● | ● | | ● | ● | ● | ● | ● | | | |
| ХП | ● | | ● | | ● | | ● | ● | ● | ● | ● | ● | ● | ● | ● | ● | | | |

Ведомая 2 секция

| № Поз | Линейные (ЛК) | | | | | | Реостатные (РК) | | | | | | | | | | УК | |
|---|---|---|---|---|---|---|---|---|---|---|---|---|---|---|---|---|---|---|
| | 1 | 2 | 3 | 4 | 5 | 6 | 217 | 7 | 8 | 9 | 218 | 10 | 11 | 12 | 22 | 17 | 20 | 23 | 24 |
| 1 | | | | ● | | | | | | | | | | | ● | | ● | | |
| 2 | | | | ● | | | | | | ● | | | | | ● | | ● | | |
| 3 | | | | ● | | | | | | ● | | | | | ● | | ● | | |
| 4 | | | | ● | | | | | ● | ● | | | | | ● | | ● | | |
| 5 | | | | ● | | | | | ● | ● | | | | | ● | | ● | | |
| 6 | | | | ● | | | | | ● | ● | | | | ● | ● | | ● | | |
| 7 | | | | ● | | | | | ● | ● | | | | ● | ● | | ● | | |
| 8 | | | | ● | | | | | ● | ● | | | | ● | ● | | ● | | |
| 9 | | | | ● | | | | | ● | ● | | | | ● | ● | | ● | ● | |
| 10 | | | | ● | ● | | | | | ● | | | | ● | ● | | ● | ● | |
| 11 | | | | ● | ● | | | | | ● | | | | ● | ● | | ● | ● | |
| 12 | | | | ● | ● | | | | ● | ● | | | | ● | ● | | ● | ● | |
| 13 | | | | ● | ● | | | | ● | ● | | | | ● | ● | | ● | ● | |
| 14 | | | | ● | ● | | | | ● | ● | | | | ● | ● | | ● | ● | |
| 15 | | | | ● | ● | | | | ● | ● | | | ● | ● | ● | | ● | ● | |
| 16 | | | | ● | ● | | | | ● | ● | | | ● | ● | ● | | ● | ● | |
| 17 | | | | ● | ● | | | ● | ● | ● | | | ● | ● | ● | | ● | ● | |
| 18 | | | | ● | ● | | | ● | ● | ● | | | ● | ● | ● | | ● | ● | |
| 19 | | | | ● | ● | | | ● | ● | ● | | ● | ● | ● | ● | | ● | ● | |
| 20 | | | | ● | ● | | | ● | ● | ● | | ● | ● | ● | ● | | ● | ● | |
| 21 | | | | ● | ● | | ● | ● | ● | ● | ● | ● | ● | ● | ● | | ● | ● | |
| ХП | | | | ● | ● | | ● | ● | ● | ● | ● | ● | ● | ● | ● | | ● | ● | |

Упрощенная схема работы электровоза на " С " соединении тяговых двигателей

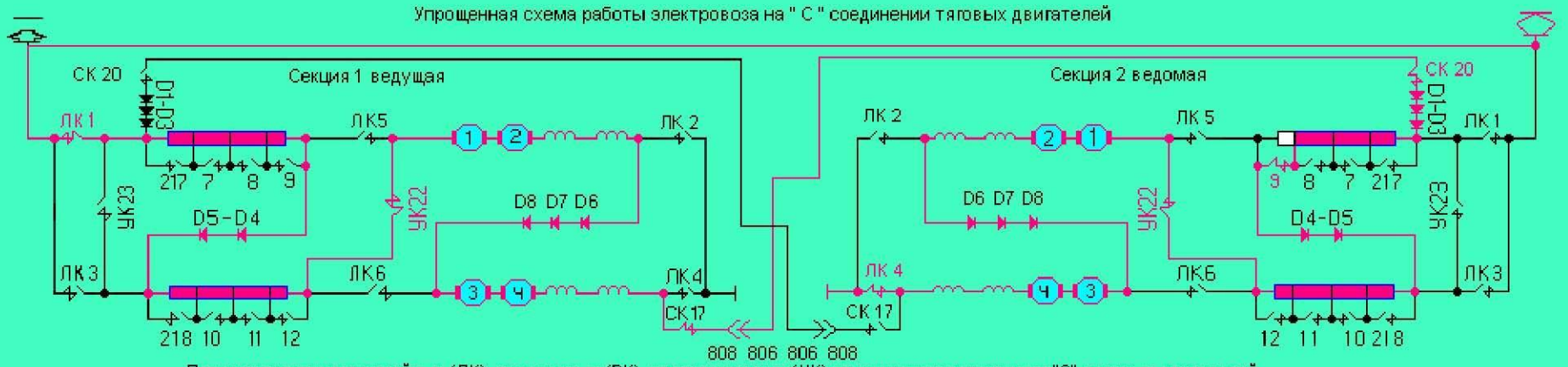


Порядок включения линейных (ЛК), реостатных (РК), уравнительных (УК) на сересном соединении "С" тяговых двигателей

Ведущая 1 секция

| № Поз | Линейные (ЛК) 1 | 2 | 3 | 4 | 5 | 6 | Реостатные (РК) 217 | 7 | 8 | 9 | 218 | 10 | 11 | 12 | 22 | 17 | 20 | УК 23 | 24 |
|---|---|---|---|---|---|---|---|---|---|---|---|---|---|---|---|---|---|---|---|
| 1 | ● | | | | | | | | | | | | | | ● | ● | | | |
| 2 | ● | | | | | | | | | | | | | | ● | ● | | | |
| 3 | ● | | | | | | | | | ● | | | | | ● | ● | | | |
| 4 | ● | | | | | | | | | ● | | | | | ● | ● | | | |
| 5 | ● | | | | | | | | ● | ● | | | | | ● | ● | | | |
| 6 | ● | | | | | | | | ● | ● | | | | | ● | ● | | | |
| 7 | ● | | ● | | | | | | | | | | | | ● | ● | | | |
| 8 | ● | | ● | | ● | | | | | | | | | | ● | ● | | | |
| 9 | ● | | ● | | ● | | | | | | | | | | ● | ● | | | |
| 10 | ● | | ● | | ● | | | | | | | | | | ● | ● | | | |
| 11 | ● | | ● | | ● | | | | | ● | | | | | ● | ● | | | |
| 12 | ● | | ● | | ● | | | | | ● | | | | | ● | ● | | | |
| 13 | ● | | ● | | ● | | | | | ● | | | | ● | ● | ● | | | |
| 14 | ● | | ● | | ● | | | | ● | ● | | | | ● | ● | ● | | | |
| 15 | ● | | ● | | ● | | | | ● | ● | | | | ● | ● | ● | | | |
| 16 | ● | | ● | | ● | | | | ● | ● | | | ● | ● | ● | ● | | | |
| 17 | ● | | ● | | ● | | | | ● | ● | | | ● | ● | ● | ● | | | |
| 18 | ● | | ● | | ● | | | ● | ● | ● | | | ● | ● | ● | ● | | | |
| 19 | ● | | ● | | ● | | | ● | ● | ● | | | ● | ● | ● | ● | | | |
| 20 | ● | | ● | | ● | | | ● | ● | ● | | ● | ● | ● | ● | ● | | | |
| 21 | ● | | ● | | ● | | | ● | ● | ● | | ● | ● | ● | ● | ● | | | |
| ХП | ● | | ● | | ● | | ● | ● | ● | ● | ● | ● | ● | ● | ● | ● | | | |

Ведомая 2 секция

| № Поз | Линейные (ЛК) 1 | 2 | 3 | 4 | 5 | 6 | Реостатные (РК) 217 | 7 | 8 | 9 | 218 | 10 | 11 | 12 | 22 | 17 | 20 | УК 23 | 24 |
|---|---|---|---|---|---|---|---|---|---|---|---|---|---|---|---|---|---|---|---|
| 1 | | | | ● | | | | | | | | | | | ● | | ● | | |
| 2 | | | | ● | | | | | | ● | | | | | ● | | ● | | |
| 3 | | | | ● | | | | | | ● | | | | | ● | | ● | | |
| 4 | | | | ● | | | | | ● | ● | | | | | ● | | ● | | |
| 5 | | | | ● | | | | | ● | ● | | | | | ● | | ● | | |
| 6 | | | | ● | | | | | ● | ● | | | | ● | ● | | ● | | |
| 7 | | | | ● | | | | | ● | ● | | | | ● | ● | | ● | | |
| 8 | | | | ● | | | | | ● | ● | | | | ● | ● | | ● | | |
| 9 | | | | ● | | | | | ● | ● | | | | ● | ● | | ● | ● | |
| 10 | | | | ● | ● | | | | | ● | | | | ● | ● | | ● | ● | |
| 11 | | | | ● | ● | | | | | ● | | | | ● | ● | | ● | ● | |
| 12 | | | | ● | ● | | | | ● | ● | | | | ● | ● | | ● | ● | |
| 13 | | | | ● | ● | | | | ● | ● | | | | ● | ● | | ● | ● | |
| 14 | | | | ● | ● | | | | ● | ● | | | | ● | ● | | ● | ● | |
| 15 | | | | ● | ● | | | | ● | ● | | | ● | ● | ● | | ● | ● | |
| 16 | | | | ● | ● | | | | ● | ● | | | ● | ● | ● | | ● | ● | |
| 17 | | | | ● | ● | | | ● | ● | ● | | | ● | ● | ● | | ● | ● | |
| 18 | | | | ● | ● | | | ● | ● | ● | | | ● | ● | ● | | ● | ● | |
| 19 | | | | ● | ● | | | ● | ● | ● | | ● | ● | ● | ● | | ● | ● | |
| 20 | | | | ● | ● | | | ● | ● | ● | | ● | ● | ● | ● | | ● | ● | |
| 21 | | | | ● | ● | | ● | ● | ● | ● | ● | ● | ● | ● | ● | | ● | ● | |
| ХП | | | | ● | ● | | ● | ● | ● | ● | ● | ● | ● | ● | ● | | ● | ● | |

Упрощенная схема работы электровоза на " С " соединении тяговых двигателей

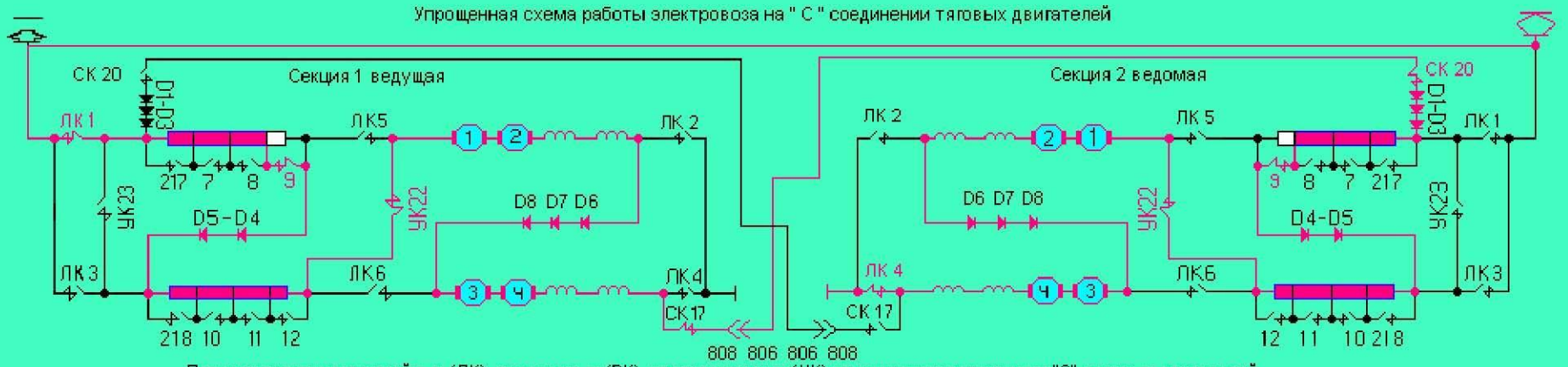


Порядок включения линейных (ЛК), реостатных (РК), уравнительных (УК) на сересном соединении "С" тяговых двигателей

Ведущая 1 секция

| № Поз | Линейные (ЛК) 1 | 2 | 3 | 4 | 5 | 6 | Реостатные (РК) 217 | 7 | 8 | 9 | 218 | 10 | 11 | 12 | 22 | 17 | 20 | УК 23 | 24 |
|---|---|---|---|---|---|---|---|---|---|---|---|---|---|---|---|---|---|---|---|
| 1 | ● | | | | | | | | | | | | | | ● | ● | | | |
| 2 | ● | | | | | | | | | | | | | | ● | ● | | | |
| 3 | ● | | | | | | | | | ● | | | | | ● | ● | | | |
| 4 | ● | | | | | | | | | ● | | | | | ● | ● | | | |
| 5 | ● | | | | | | | | ● | ● | | | | | ● | ● | | | |
| 6 | ● | | | | | | | | ● | ● | | | | | ● | ● | | | |
| 7 | ● | | ● | | | | | | | | | | | | ● | ● | | | |
| 8 | ● | | ● | | ● | | | | | | | | | | ● | ● | | | |
| 9 | ● | | ● | | ● | | | | | | | | | | ● | ● | | | |
| 10 | ● | | ● | | ● | | | | | | | | | | ● | ● | | | |
| 11 | ● | | ● | | ● | | | | | ● | | | | | ● | ● | | | |
| 12 | ● | | ● | | ● | | | | | ● | | | | | ● | ● | | | |
| 13 | ● | | ● | | ● | | | | | ● | | | | ● | ● | ● | | | |
| 14 | ● | | ● | | ● | | | | ● | ● | | | | ● | ● | ● | | | |
| 15 | ● | | ● | | ● | | | | ● | ● | | | | ● | ● | ● | | | |
| 16 | ● | | ● | | ● | | | | ● | ● | | | ● | ● | ● | ● | | | |
| 17 | ● | | ● | | ● | | | | ● | ● | | | ● | ● | ● | ● | | | |
| 18 | ● | | ● | | ● | | | ● | ● | ● | | | ● | ● | ● | ● | | | |
| 19 | ● | | ● | | ● | | | ● | ● | ● | | | ● | ● | ● | ● | | | |
| 20 | ● | | ● | | ● | | | ● | ● | ● | | ● | ● | ● | ● | ● | | | |
| 21 | ● | | ● | | ● | | | ● | ● | ● | | ● | ● | ● | ● | ● | | | |
| ХП | ● | | ● | | ● | | ● | ● | ● | ● | ● | ● | ● | ● | ● | ● | | | |

Ведомая 2 секция

| № Поз | Линейные (ЛК) 1 | 2 | 3 | 4 | 5 | 6 | Реостатные (РК) 217 | 7 | 8 | 9 | 218 | 10 | 11 | 12 | 22 | 17 | 20 | УК 23 | 24 |
|---|---|---|---|---|---|---|---|---|---|---|---|---|---|---|---|---|---|---|---|
| 1 | | | | ● | | | | | | | | | | | ● | | ● | | |
| 2 | | | | ● | | | | | | ● | | | | | ● | | ● | | |
| 3 | | | | ● | | | | | | ● | | | | | ● | | ● | | |
| 4 | | | | ● | | | | | ● | ● | | | | | ● | | ● | | |
| 5 | | | | ● | | | | | ● | ● | | | | | ● | | ● | | |
| 6 | | | | ● | | | | | ● | ● | | | | ● | ● | | ● | | |
| 7 | | | | ● | | | | | ● | ● | | | | ● | ● | | ● | | |
| 8 | | | | ● | | | | | ● | ● | | | | ● | ● | | ● | | |
| 9 | | | | ● | | | | | ● | ● | | | | ● | ● | | ● | ● | |
| 10 | | | | ● | ● | | | | | ● | | | | ● | ● | | ● | ● | |
| 11 | | | | ● | ● | | | | | ● | | | | ● | ● | | ● | ● | |
| 12 | | | | ● | ● | | | | ● | ● | | | | ● | ● | | ● | ● | |
| 13 | | | | ● | ● | | | | ● | ● | | | | ● | ● | | ● | ● | |
| 14 | | | | ● | ● | | | | ● | ● | | | | ● | ● | | ● | ● | |
| 15 | | | | ● | ● | | | | ● | ● | | | ● | ● | ● | | ● | ● | |
| 16 | | | | ● | ● | | | | ● | ● | | | ● | ● | ● | | ● | ● | |
| 17 | | | | ● | ● | | | ● | ● | ● | | | ● | ● | ● | | ● | ● | |
| 18 | | | | ● | ● | | | ● | ● | ● | | | ● | ● | ● | | ● | ● | |
| 19 | | | | ● | ● | | | ● | ● | ● | | ● | ● | ● | ● | | ● | ● | |
| 20 | | | | ● | ● | | | ● | ● | ● | | ● | ● | ● | ● | | ● | ● | |
| 21 | | | | ● | ● | | ● | ● | ● | ● | ● | ● | ● | ● | ● | | ● | ● | |
| ХП | | | | ● | ● | | ● | ● | ● | ● | ● | ● | ● | ● | ● | | ● | ● | |

Упрощенная схема работы электровоза на " С " соединении тяговых двигателей

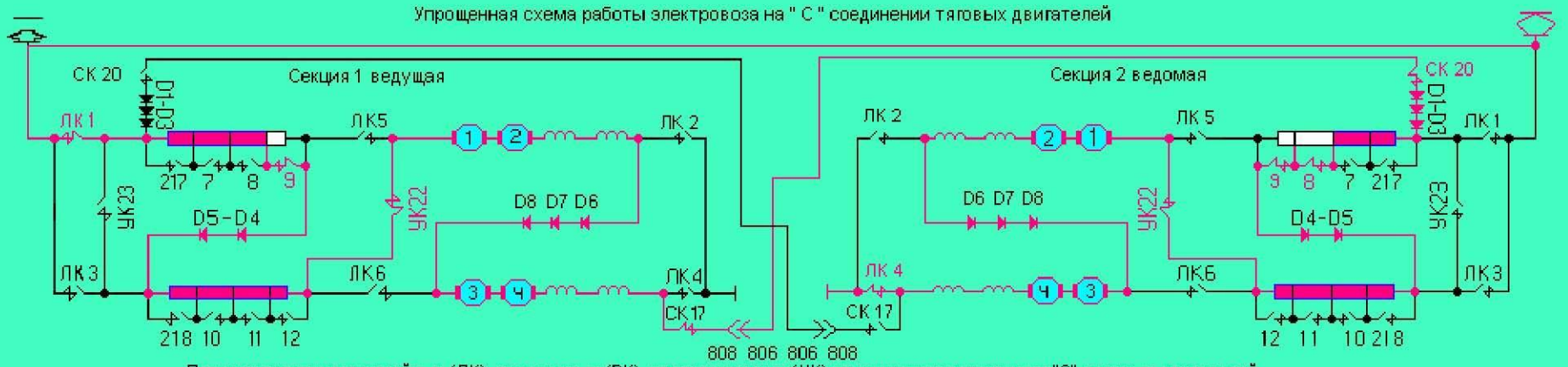


Порядок включения линейных (ЛК), реостатных (РК), уравнительных (УК) на сересном соединении "С" тяговых двигателей

Ведущая 1 секция

| № | Линейные (ЛК) | | | | | | Реостатные (РК) | | | | | | | | | | | УК | |
|---|---|---|---|---|---|---|---|---|---|---|---|---|---|---|---|---|---|---|---|
| Поз | 1 | 2 | 3 | 4 | 5 | 6 | 217 | 7 | 8 | 9 | 218 | 10 | 11 | 12 | 22 | 17 | 20 | 23 | 24 |
| 1 | ● | | | | | | | | | | | | | | ● | ● | | | |
| 2 | ● | | | | | | | | | | | | | | ● | ● | | | |
| 3 | ● | | | | | | | | | ● | | | | | ● | ● | | | |
| 4 | ● | | | | | | | | | ● | | | | | ● | ● | | | |
| 5 | ● | | | | | | | | ● | ● | | | | | ● | ● | | | |
| 6 | ● | | | | | | | | ● | ● | | | | | ● | ● | | | |
| 7 | ● | | ● | | | | | | | | | | | | ● | ● | | | |
| 8 | ● | | ● | | ● | | | | | | | | | | ● | ● | | | |
| 9 | ● | | ● | | ● | | | | | | | | | | ● | ● | | | |
| 10 | ● | | ● | | ● | | | | | | | | | | ● | ● | | | |
| 11 | ● | | ● | | ● | | | | | ● | | | | | ● | ● | | | |
| 12 | ● | | ● | | ● | | | | | ● | | | | | ● | ● | | | |
| 13 | ● | | ● | | ● | | | | | ● | | | | ● | ● | ● | | | |
| 14 | ● | | ● | | ● | | | | ● | ● | | | | ● | ● | ● | | | |
| 15 | ● | | ● | | ● | | | | ● | ● | | | | ● | ● | ● | | | |
| 16 | ● | | ● | | ● | | | | ● | ● | | | ● | ● | ● | ● | | | |
| 17 | ● | | ● | | ● | | | | ● | ● | | | ● | ● | ● | ● | | | |
| 18 | ● | | ● | | ● | | | ● | ● | ● | | | ● | ● | ● | ● | | | |
| 19 | ● | | ● | | ● | | | ● | ● | ● | | | ● | ● | ● | ● | | | |
| 20 | ● | | ● | | ● | | | ● | ● | ● | | ● | ● | ● | ● | ● | | | |
| 21 | ● | | ● | | ● | | | ● | ● | ● | | ● | ● | ● | ● | ● | | | |
| ХП | ● | | ● | | ● | | ● | ● | ● | ● | ● | ● | ● | ● | ● | ● | | | |

Ведомая 2 секция

| № | Линейные (ЛК) | | | | | | Реостатные (РК) | | | | | | | | | | | УК | |
|---|---|---|---|---|---|---|---|---|---|---|---|---|---|---|---|---|---|---|---|
| Поз | 1 | 2 | 3 | 4 | 5 | 6 | 217 | 7 | 8 | 9 | 218 | 10 | 11 | 12 | 22 | 17 | 20 | 23 | 24 |
| 1 | | | | ● | | | | | | | | | | | ● | | ● | | |
| 2 | | | | ● | | | | | | ● | | | | | ● | | ● | | |
| 3 | | | | ● | | | | | | ● | | | | | ● | | ● | | |
| 4 | | | | ● | | | | | ● | ● | | | | | ● | | ● | | |
| 5 | | | | ● | | | | | ● | ● | | | | | ● | | ● | | |
| 6 | | | | ● | | | | | ● | ● | | | | ● | ● | | ● | | |
| 7 | | | | ● | | | | | ● | ● | | | | ● | ● | | ● | | |
| 8 | | | | ● | | | | | ● | ● | | | | ● | ● | | ● | | |
| 9 | | | | ● | | | | | ● | ● | | | | ● | ● | | ● | ● | |
| 10 | | | | ● | ● | | | | | ● | | | | ● | ● | | ● | ● | |
| 11 | | | | ● | ● | | | | | ● | | | | ● | ● | | ● | ● | |
| 12 | | | | ● | ● | | | | ● | ● | | | | ● | ● | | ● | ● | |
| 13 | | | | ● | ● | | | | ● | ● | | | | ● | ● | | ● | ● | |
| 14 | | | | ● | ● | | | | ● | ● | | | | ● | ● | | ● | ● | |
| 15 | | | | ● | ● | | | | ● | ● | | | ● | ● | ● | | ● | ● | |
| 16 | | | | ● | ● | | | | ● | ● | | | ● | ● | ● | | ● | ● | |
| 17 | | | | ● | ● | | | ● | ● | ● | | | ● | ● | ● | | ● | ● | |
| 18 | | | | ● | ● | | | ● | ● | ● | | | ● | ● | ● | | ● | ● | |
| 19 | | | | ● | ● | | | ● | ● | ● | | ● | ● | ● | ● | | ● | ● | |
| 20 | | | | ● | ● | | | ● | ● | ● | | ● | ● | ● | ● | | ● | ● | |
| 21 | | | | ● | ● | | ● | ● | ● | ● | ● | ● | ● | ● | ● | | ● | ● | |
| ХП | | | | ● | ● | | ● | ● | ● | ● | ● | ● | ● | ● | ● | | ● | ● | |

Упрощенная схема работы электровоза на " С " соединении тяговых двигателей

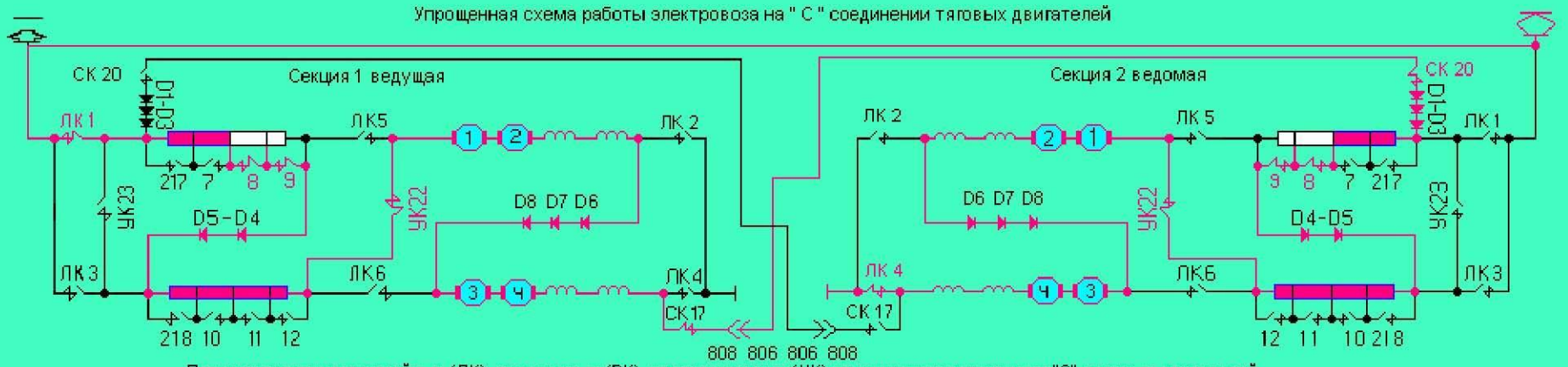


Порядок включения линейных (ЛК), реостатных (РК), уравнительных (УК) на сересном соединении "С" тяговых двигателей

Ведущая 1 секция

| № Поз | Линейные (ЛК) | | | | | | Реостатные (РК) | | | | | | | | | | | УК | |
|---|---|---|---|---|---|---|---|---|---|---|---|---|---|---|---|---|---|---|---|
| | 1 | 2 | 3 | 4 | 5 | 6 | 217 | 7 | 8 | 9 | 218 | 10 | 11 | 12 | 22 | 17 | 20 | 23 | 24 |
| 1 | ● | | | | | | | | | | | | | | ● | ● | | | |
| 2 | ● | | | | | | | | | | | | | | ● | ● | | | |
| 3 | ● | | | | | | | | | ● | | | | | ● | ● | | | |
| 4 | ● | | | | | | | | | ● | | | | | ● | ● | | | |
| 5 | ● | | | | | | | | ● | ● | | | | | ● | ● | | | |
| 6 | ● | | | | | | | | ● | ● | | | | | ● | ● | | | |
| 7 | ● | | ● | | | | | | | | | | | | ● | ● | | | |
| 8 | ● | | ● | | ● | | | | | | | | | | ● | ● | | | |
| 9 | ● | | ● | | ● | | | | | | | | | | ● | ● | | | |
| 10 | ● | | ● | | ● | | | | | | | | | | ● | ● | | | |
| 11 | ● | | ● | | ● | | | | | ● | | | | | ● | ● | | | |
| 12 | ● | | ● | | ● | | | | | ● | | | | | ● | ● | | | |
| 13 | ● | | ● | | ● | | | | | ● | | | | ● | ● | ● | | | |
| 14 | ● | | ● | | ● | | | | ● | ● | | | | ● | ● | ● | | | |
| 15 | ● | | ● | | ● | | | | ● | ● | | | | ● | ● | ● | | | |
| 16 | ● | | ● | | ● | | | | ● | ● | | | ● | ● | ● | ● | | | |
| 17 | ● | | ● | | ● | | | | ● | ● | | | ● | ● | ● | ● | | | |
| 18 | ● | | ● | | ● | | | ● | ● | ● | | | ● | ● | ● | ● | | | |
| 19 | ● | | ● | | ● | | | ● | ● | ● | | | ● | ● | ● | ● | | | |
| 20 | ● | | ● | | ● | | | ● | ● | ● | | ● | ● | ● | ● | ● | | | |
| 21 | ● | | ● | | ● | | | ● | ● | ● | | ● | ● | ● | ● | ● | | | |
| ХП | ● | | ● | | ● | | ● | ● | ● | ● | ● | ● | ● | ● | ● | ● | | | |

Ведомая 2 секция

| № Поз | Линейные (ЛК) | | | | | | Реостатные (РК) | | | | | | | | | | | УК | |
|---|---|---|---|---|---|---|---|---|---|---|---|---|---|---|---|---|---|---|---|
| | 1 | 2 | 3 | 4 | 5 | 6 | 217 | 7 | 8 | 9 | 218 | 10 | 11 | 12 | 22 | 17 | 20 | 23 | 24 |
| 1 | | | | ● | | | | | | | | | | | ● | | ● | | |
| 2 | | | | ● | | | | | | ● | | | | | ● | | ● | | |
| 3 | | | | ● | | | | | | ● | | | | | ● | | ● | | |
| 4 | | | | ● | | | | | ● | ● | | | | | ● | | ● | | |
| 5 | | | | ● | | | | | ● | ● | | | | | ● | | ● | | |
| 6 | | | | ● | | | | | ● | ● | | | | ● | ● | | ● | | |
| 7 | | | | ● | | | | | ● | ● | | | | ● | ● | | ● | | |
| 8 | | | | ● | | | | | ● | ● | | | | ● | ● | | ● | | |
| 9 | | | | ● | | | | | ● | ● | | | | ● | ● | | ● | ● | |
| 10 | | | | ● | ● | | | | | ● | | | | ● | ● | | ● | ● | |
| 11 | | | | ● | ● | | | | | ● | | | | ● | ● | | ● | ● | |
| 12 | | | | ● | ● | | | | ● | ● | | | | ● | ● | | ● | ● | |
| 13 | | | | ● | ● | | | | ● | ● | | | | ● | ● | | ● | ● | |
| 14 | | | | ● | ● | | | | ● | ● | | | | ● | ● | | ● | ● | |
| 15 | | | | ● | ● | | | | ● | ● | | | ● | ● | ● | | ● | ● | |
| 16 | | | | ● | ● | | | | ● | ● | | | ● | ● | ● | | ● | ● | |
| 17 | | | | ● | ● | | | ● | ● | ● | | | ● | ● | ● | | ● | ● | |
| 18 | | | | ● | ● | | | ● | ● | ● | | | ● | ● | ● | | ● | ● | |
| 19 | | | | ● | ● | | | ● | ● | ● | | ● | ● | ● | ● | | ● | ● | |
| 20 | | | | ● | ● | | | ● | ● | ● | | ● | ● | ● | ● | | ● | ● | |
| 21 | | | | ● | ● | | ● | ● | ● | ● | ● | ● | ● | ● | ● | | ● | ● | |
| ХП | | | | ● | ● | | ● | ● | ● | ● | ● | ● | ● | ● | ● | | ● | ● | |

Упрощенная схема работы электровоза на " С " соединении тяговых двигателей

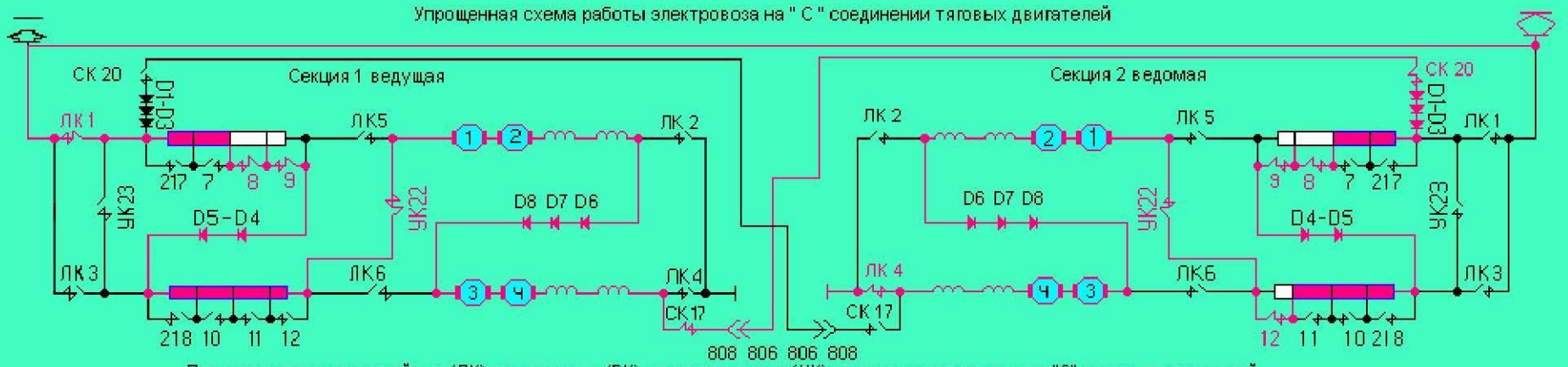


Порядок включения линейных (ЛК), реостатных (РК), уравнительных (УК) на сересном соединении "С" тяговых двигателей

Ведущая 1 секция

| № Поз | Линейные (ЛК) | | | | | | Реостатные (РК) | | | | | | | | | | | УК | |
|---|---|---|---|---|---|---|---|---|---|---|---|---|---|---|---|---|---|---|---|
| | 1 | 2 | 3 | 4 | 5 | 6 | 217 | 7 | 8 | 9 | 218 | 10 | 11 | 12 | 22 | 17 | 20 | 23 | 24 |
| 1 | ● | | | | | | | | | | | | | | ● | ● | | | |
| 2 | ● | | | | | | | | | | | | | | ● | ● | | | |
| 3 | ● | | | | | | | | | ● | | | | | ● | ● | | | |
| 4 | ● | | | | | | | | | ● | | | | | ● | ● | | | |
| 5 | ● | | | | | | | | ● | ● | | | | | ● | ● | | | |
| 6 | ● | | | | | | | | ● | ● | | | | | ● | ● | | | |
| 7 | ● | | ● | | | | | | | | | | | | ● | ● | | | |
| 8 | ● | | ● | | ● | | | | | | | | | | ● | ● | | | |
| 9 | ● | | ● | | ● | | | | | | | | | | ● | ● | | | |
| 10 | ● | | ● | | ● | | | | | | | | | | ● | ● | | | |
| 11 | ● | | ● | | ● | | | | | ● | | | | | ● | ● | | | |
| 12 | ● | | ● | | ● | | | | | ● | | | | | ● | ● | | | |
| 13 | ● | | ● | | ● | | | | | ● | | | | ● | ● | ● | | | |
| 14 | ● | | ● | | ● | | | | ● | ● | | | | ● | ● | ● | | | |
| 15 | ● | | ● | | ● | | | | ● | ● | | | | ● | ● | ● | | | |
| 16 | ● | | ● | | ● | | | | ● | ● | | | ● | ● | ● | ● | | | |
| 17 | ● | | ● | | ● | | | | ● | ● | | | ● | ● | ● | ● | | | |
| 18 | ● | | ● | | ● | | | ● | ● | ● | | | ● | ● | ● | ● | | | |
| 19 | ● | | ● | | ● | | | ● | ● | ● | | | ● | ● | ● | ● | | | |
| 20 | ● | | ● | | ● | | | ● | ● | ● | | ● | ● | ● | ● | ● | | | |
| 21 | ● | | ● | | ● | | | ● | ● | ● | | ● | ● | ● | ● | ● | | | |
| ХП | ● | | ● | | ● | | ● | ● | ● | ● | ● | ● | ● | ● | ● | ● | | | |

Ведомая 2 секция

| № Поз | Линейные (ЛК) | | | | | | Реостатные (РК) | | | | | | | | | | | УК | |
|---|---|---|---|---|---|---|---|---|---|---|---|---|---|---|---|---|---|---|---|
| | 1 | 2 | 3 | 4 | 5 | 6 | 217 | 7 | 8 | 9 | 218 | 10 | 11 | 12 | 22 | 17 | 20 | 23 | 24 |
| 1 | | | | ● | | | | | | | | | | | ● | | ● | | |
| 2 | | | | ● | | | | | | ● | | | | | ● | | ● | | |
| 3 | | | | ● | | | | | | ● | | | | | ● | | ● | | |
| 4 | | | | ● | | | | | ● | ● | | | | | ● | | ● | | |
| 5 | | | | ● | | | | | ● | ● | | | | | ● | | ● | | |
| 6 | | | | ● | | | | | ● | ● | | | | ● | ● | | ● | | |
| 7 | | | | ● | | | | | ● | ● | | | | ● | ● | | ● | | |
| 8 | | | | ● | | | | | ● | ● | | | | ● | ● | | ● | | |
| 9 | | | | ● | | | | | ● | ● | | | | ● | ● | | ● | ● | |
| 10 | | | | ● | ● | | | | | ● | | | | ● | ● | | ● | ● | |
| 11 | | | | ● | ● | | | | | ● | | | | ● | ● | | ● | ● | |
| 12 | | | | ● | ● | | | | ● | ● | | | | ● | ● | | ● | ● | |
| 13 | | | | ● | ● | | | | ● | ● | | | | ● | ● | | ● | ● | |
| 14 | | | | ● | ● | | | | ● | ● | | | | ● | ● | | ● | ● | |
| 15 | | | | ● | ● | | | | ● | ● | | | ● | ● | ● | | ● | ● | |
| 16 | | | | ● | ● | | | | ● | ● | | | ● | ● | ● | | ● | ● | |
| 17 | | | | ● | ● | | | ● | ● | ● | | | ● | ● | ● | | ● | ● | |
| 18 | | | | ● | ● | | | ● | ● | ● | | | ● | ● | ● | | ● | ● | |
| 19 | | | | ● | ● | | | ● | ● | ● | | ● | ● | ● | ● | | ● | ● | |
| 20 | | | | ● | ● | | | ● | ● | ● | | ● | ● | ● | ● | | ● | ● | |
| 21 | | | | ● | ● | | ● | ● | ● | ● | ● | ● | ● | ● | ● | | ● | ● | |
| ХП | | | | ● | ● | | ● | ● | ● | ● | ● | ● | ● | ● | ● | | ● | ● | |

Упрощенная схема работы электровоза на " С " соединении тяговых двигателей

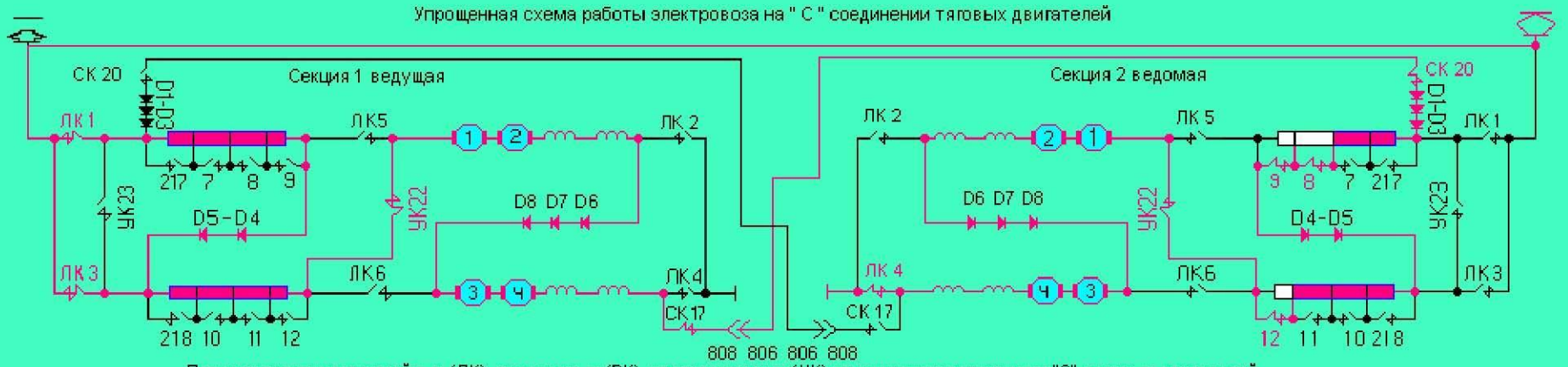


Порядок включения линейных (ЛК), реостатных (РК), уравнительных (УК) на сересном соединении "С" тяговых двигателей

Ведущая 1 секция

| № Поз | Линейные (ЛК) | | | | | | Реостатные (РК) | | | | | | | | | | | УК | |
|---|---|---|---|---|---|---|---|---|---|---|---|---|---|---|---|---|---|---|---|
| | 1 | 2 | 3 | 4 | 5 | 6 | 217 | 7 | 8 | 9 | 218 | 10 | 11 | 12 | 22 | 17 | 20 | 23 | 24 |
| 1 | ● | | | | | | | | | | | | | | ● | ● | | | |
| 2 | ● | | | | | | | | | | | | | | ● | ● | | | |
| 3 | ● | | | | | | | | | ● | | | | | ● | ● | | | |
| 4 | ● | | | | | | | | | ● | | | | | ● | ● | | | |
| 5 | ● | | | | | | | | ● | ● | | | | | ● | ● | | | |
| 6 | ● | | | | | | | | ● | ● | | | | | ● | ● | | | |
| 7 | ● | | ● | | | | | | | | | | | | ● | ● | | | |
| 8 | ● | | ● | | ● | | | | | | | | | | ● | ● | | | |
| 9 | ● | | ● | | ● | | | | | | | | | | ● | ● | | | |
| 10 | ● | | ● | | ● | | | | | | | | | | ● | ● | | | |
| 11 | ● | | ● | | ● | | | | | ● | | | | | ● | ● | | | |
| 12 | ● | | ● | | ● | | | | | ● | | | | | ● | ● | | | |
| 13 | ● | | ● | | ● | | | | | ● | | | | ● | ● | ● | | | |
| 14 | ● | | ● | | ● | | | | ● | ● | | | | ● | ● | ● | | | |
| 15 | ● | | ● | | ● | | | | ● | ● | | | | ● | ● | ● | | | |
| 16 | ● | | ● | | ● | | | | ● | ● | | | ● | ● | ● | ● | | | |
| 17 | ● | | ● | | ● | | | | ● | ● | | | ● | ● | ● | ● | | | |
| 18 | ● | | ● | | ● | | | ● | ● | ● | | | ● | ● | ● | ● | | | |
| 19 | ● | | ● | | ● | | | ● | ● | ● | | | ● | ● | ● | ● | | | |
| 20 | ● | | ● | | ● | | | ● | ● | ● | | ● | ● | ● | ● | ● | | | |
| 21 | ● | | ● | | ● | | | ● | ● | ● | | ● | ● | ● | ● | ● | | | |
| ХП | ● | | ● | | ● | | ● | ● | ● | ● | ● | ● | ● | ● | ● | ● | | | |

Ведомая 2 секция

| № Поз | Линейные (ЛК) | | | | | | Реостатные (РК) | | | | | | | | | | | УК | |
|---|---|---|---|---|---|---|---|---|---|---|---|---|---|---|---|---|---|---|---|
| | 1 | 2 | 3 | 4 | 5 | 6 | 217 | 7 | 8 | 9 | 218 | 10 | 11 | 12 | 22 | 17 | 20 | 23 | 24 |
| 1 | | | | ● | | | | | | | | | | | ● | | ● | | |
| 2 | | | | ● | | | | | | ● | | | | | ● | | ● | | |
| 3 | | | | ● | | | | | | ● | | | | | ● | | ● | | |
| 4 | | | | ● | | | | | ● | ● | | | | | ● | | ● | | |
| 5 | | | | ● | | | | | ● | ● | | | | | ● | | ● | | |
| 6 | | | | ● | | | | | ● | ● | | | | ● | ● | | ● | | |
| 7 | | | | ● | | | | | ● | ● | | | | ● | ● | | ● | | |
| 8 | | | | ● | | | | | ● | ● | | | | ● | ● | | ● | | |
| 9 | | | | ● | | | | | ● | ● | | | | ● | ● | | ● | ● | |
| 10 | | | | ● | ● | | | | | ● | | | | ● | ● | | ● | ● | |
| 11 | | | | ● | ● | | | | | ● | | | | ● | ● | | ● | ● | |
| 12 | | | | ● | ● | | | | ● | ● | | | | ● | ● | | ● | ● | |
| 13 | | | | ● | ● | | | | ● | ● | | | | ● | ● | | ● | ● | |
| 14 | | | | ● | ● | | | | ● | ● | | | | ● | ● | | ● | ● | |
| 15 | | | | ● | ● | | | | ● | ● | | | ● | ● | ● | | ● | ● | |
| 16 | | | | ● | ● | | | | ● | ● | | | ● | ● | ● | | ● | ● | |
| 17 | | | | ● | ● | | | ● | ● | ● | | | ● | ● | ● | | ● | ● | |
| 18 | | | | ● | ● | | | ● | ● | ● | | | ● | ● | ● | | ● | ● | |
| 19 | | | | ● | ● | | | ● | ● | ● | | ● | ● | ● | ● | | ● | ● | |
| 20 | | | | ● | ● | | | ● | ● | ● | | ● | ● | ● | ● | | ● | ● | |
| 21 | | | | ● | ● | | ● | ● | ● | ● | ● | ● | ● | ● | ● | | ● | ● | |
| ХП | | | | ● | ● | | ● | ● | ● | ● | ● | ● | ● | ● | ● | | ● | ● | |

Упрощенная схема работы электровоза на " С " соединении тяговых двигателей

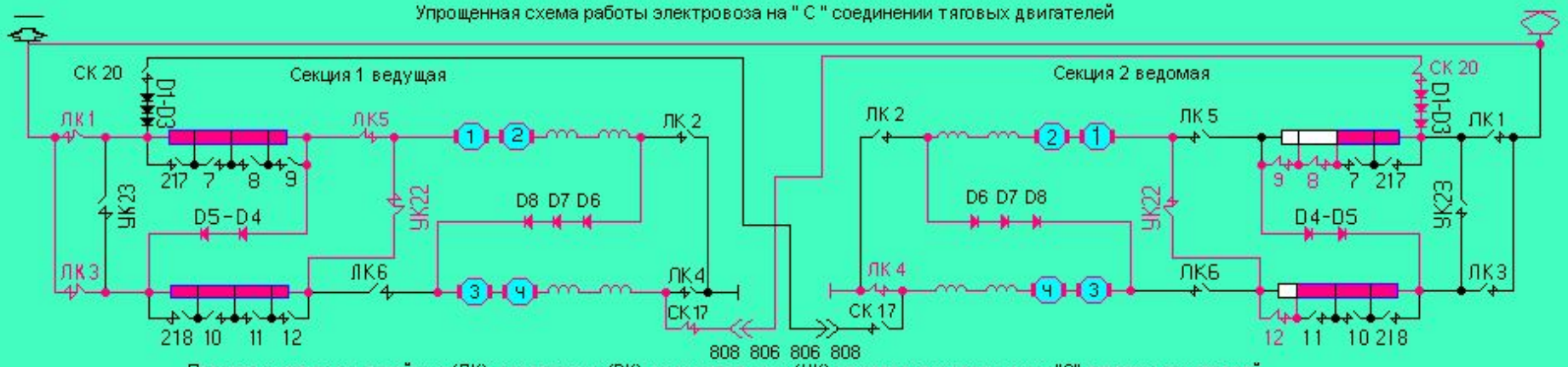


Порядок включения линейных (ЛК), реостатных (РК), уравнительных (УК) на сересном соединении "С" тяговых двигателей

Ведущая 1 секция

| № Поз | Линейные (ЛК) 1 | 2 | 3 | 4 | 5 | 6 | Реостатные (РК) 217 | 7 | 8 | 9 | 218 | 10 | 11 | 12 | 22 | 17 | 20 | УК 23 | 24 |
|---|---|---|---|---|---|---|---|---|---|---|---|---|---|---|---|---|---|---|---|
| 1 | ● | | | | | | | | | | | | | | ● | ● | | | |
| 2 | ● | | | | | | | | | | | | | | ● | ● | | | |
| 3 | ● | | | | | | | | | ● | | | | | ● | ● | | | |
| 4 | ● | | | | | | | | | ● | | | | | ● | ● | | | |
| 5 | ● | | | | | | | | ● | ● | | | | | ● | ● | | | |
| 6 | ● | | | | | | | | ● | ● | | | | | ● | ● | | | |
| 7 | ● | | ● | | | | | | | | | | | | ● | ● | | | |
| 8 | ● | | ● | | ● | | | | | | | | | | ● | ● | | | |
| 9 | ● | | ● | | ● | | | | | | | | | | ● | ● | | | |
| 10 | ● | | ● | | ● | | | | | | | | | | ● | ● | | | |
| 11 | ● | | ● | | ● | | | | | ● | | | | | ● | ● | | | |
| 12 | ● | | ● | | ● | | | | | ● | | | | | ● | ● | | | |
| 13 | ● | | ● | | ● | | | | | ● | | | | ● | ● | ● | | | |
| 14 | ● | | ● | | ● | | | | ● | ● | | | | ● | ● | ● | | | |
| 15 | ● | | ● | | ● | | | | ● | ● | | | | ● | ● | ● | | | |
| 16 | ● | | ● | | ● | | | | ● | ● | | | ● | ● | ● | ● | | | |
| 17 | ● | | ● | | ● | | | | ● | ● | | | ● | ● | ● | ● | | | |
| 18 | ● | | ● | | ● | | | ● | ● | ● | | | ● | ● | ● | ● | | | |
| 19 | ● | | ● | | ● | | | ● | ● | ● | | | ● | ● | ● | ● | | | |
| 20 | ● | | ● | | ● | | | ● | ● | ● | | ● | ● | ● | ● | ● | | | |
| 21 | ● | | ● | | ● | | | ● | ● | ● | | ● | ● | ● | ● | ● | | | |
| ХП | ● | | ● | | ● | | ● | ● | ● | ● | ● | ● | ● | ● | ● | ● | | | |

Ведомая 2 секция

| № Поз | Линейные (ЛК) 1 | 2 | 3 | 4 | 5 | 6 | Реостатные (РК) 217 | 7 | 8 | 9 | 218 | 10 | 11 | 12 | 22 | 17 | 20 | УК 23 | 24 |
|---|---|---|---|---|---|---|---|---|---|---|---|---|---|---|---|---|---|---|---|
| 1 | | | | ● | | | | | | | | | | | ● | | ● | | |
| 2 | | | | ● | | | | | | ● | | | | | ● | | ● | | |
| 3 | | | | ● | | | | | | ● | | | | | ● | | ● | | |
| 4 | | | | ● | | | | | ● | ● | | | | | ● | | ● | | |
| 5 | | | | ● | | | | | ● | ● | | | | | ● | | ● | | |
| 6 | | | | ● | | | | | ● | ● | | | | ● | ● | | ● | | |
| 7 | | | | ● | | | | | ● | ● | | | | ● | ● | | ● | | |
| 8 | | | | ● | | | | | ● | ● | | | | ● | ● | | ● | | |
| 9 | | | | ● | | | | | ● | ● | | | | ● | ● | | ● | ● | |
| 10 | | | | ● | ● | | | | | ● | | | | ● | ● | | ● | ● | |
| 11 | | | | ● | ● | | | | | ● | | | | ● | ● | | ● | ● | |
| 12 | | | | ● | ● | | | | ● | ● | | | | ● | ● | | ● | ● | |
| 13 | | | | ● | ● | | | | ● | ● | | | | ● | ● | | ● | ● | |
| 14 | | | | ● | ● | | | | ● | ● | | | | ● | ● | | ● | ● | |
| 15 | | | | ● | ● | | | | ● | ● | | | ● | ● | ● | | ● | ● | |
| 16 | | | | ● | ● | | | | ● | ● | | | ● | ● | ● | | ● | ● | |
| 17 | | | | ● | ● | | | ● | ● | ● | | | ● | ● | ● | | ● | ● | |
| 18 | | | | ● | ● | | | ● | ● | ● | | | ● | ● | ● | | ● | ● | |
| 19 | | | | ● | ● | | | ● | ● | ● | | ● | ● | ● | ● | | ● | ● | |
| 20 | | | | ● | ● | | | ● | ● | ● | | ● | ● | ● | ● | | ● | ● | |
| 21 | | | | ● | ● | | ● | ● | ● | ● | ● | ● | ● | ● | ● | | ● | ● | |
| ХП | | | | ● | ● | | ● | ● | ● | ● | ● | ● | ● | ● | ● | | ● | ● | |

Упрощенная схема работы электровоза на " С " соединении тяговых двигателей

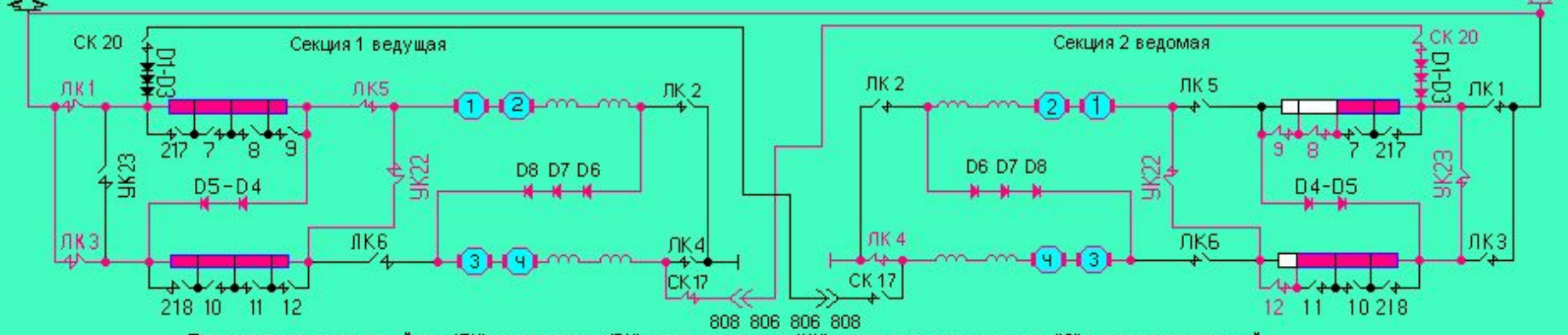


Порядок включения линейных (ЛК), реостатных (РК), уравнительных (УК) на сересном соединении "С" тяговых двигателей

Ведущая 1 секция

| № Поз | Линейные (ЛК) 1 | 2 | 3 | 4 | 5 | 6 | Реостатные (РК) 217 | 7 | 8 | 9 | 218 | 10 | 11 | 12 | 22 | 17 | 20 | УК 23 | 24 |
|---|---|---|---|---|---|---|---|---|---|---|---|---|---|---|---|---|---|---|---|
| 1 | ● | | | | | | | | | | | | | | ● | ● | | | |
| 2 | ● | | | | | | | | | | | | | | ● | ● | | | |
| 3 | ● | | | | | | | | | ● | | | | | ● | ● | | | |
| 4 | ● | | | | | | | | | ● | | | | | ● | ● | | | |
| 5 | ● | | | | | | | | ● | ● | | | | | ● | ● | | | |
| 6 | ● | | | | | | | | ● | ● | | | | | ● | ● | | | |
| 7 | ● | | ● | | | | | | | | | | | | ● | ● | | | |
| 8 | ● | | ● | | ● | | | | | | | | | | ● | ● | | | |
| 9 | ● | | ● | | ● | | | | | | | | | | ● | ● | | | |
| 10 | ● | | ● | | ● | | | | | | | | | | ● | ● | | | |
| 11 | ● | | ● | | ● | | | | | ● | | | | | ● | ● | | | |
| 12 | ● | | ● | | ● | | | | | ● | | | | | ● | ● | | | |
| 13 | ● | | ● | | ● | | | | | ● | | | | ● | ● | ● | | | |
| 14 | ● | | ● | | ● | | | | ● | ● | | | | ● | ● | ● | | | |
| 15 | ● | | ● | | ● | | | | ● | ● | | | | ● | ● | ● | | | |
| 16 | ● | | ● | | ● | | | | ● | ● | | | ● | ● | ● | ● | | | |
| 17 | ● | | ● | | ● | | | | ● | ● | | | ● | ● | ● | ● | | | |
| 18 | ● | | ● | | ● | | | ● | ● | ● | | | ● | ● | ● | ● | | | |
| 19 | ● | | ● | | ● | | | ● | ● | ● | | | ● | ● | ● | ● | | | |
| 20 | ● | | ● | | ● | | | ● | ● | ● | | ● | ● | ● | ● | ● | | | |
| 21 | ● | | ● | | ● | | | ● | ● | ● | | ● | ● | ● | ● | ● | | | |
| ХП | ● | | ● | | ● | | ● | ● | ● | ● | ● | ● | ● | ● | ● | ● | | | |

Ведомая 2 секция

| № Поз | Линейные (ЛК) 1 | 2 | 3 | 4 | 5 | 6 | Реостатные (РК) 217 | 7 | 8 | 9 | 218 | 10 | 11 | 12 | 22 | 17 | 20 | УК 23 | 24 |
|---|---|---|---|---|---|---|---|---|---|---|---|---|---|---|---|---|---|---|---|
| 1 | | | | ● | | | | | | | | | | | ● | | ● | | |
| 2 | | | | ● | | | | | | ● | | | | | ● | | ● | | |
| 3 | | | | ● | | | | | | ● | | | | | ● | | ● | | |
| 4 | | | | ● | | | | | ● | ● | | | | | ● | | ● | | |
| 5 | | | | ● | | | | | ● | ● | | | | | ● | | ● | | |
| 6 | | | | ● | | | | | ● | ● | | | | ● | ● | | ● | | |
| 7 | | | | ● | | | | | ● | ● | | | | ● | ● | | ● | | |
| 8 | | | | ● | | | | | ● | ● | | | | ● | ● | | ● | | |
| 9 | | | | ● | | | | | ● | ● | | | | ● | ● | | ● | ● | |
| 10 | | | | ● | ● | | | | | ● | | | | ● | ● | | ● | ● | |
| 11 | | | | ● | ● | | | | | ● | | | | ● | ● | | ● | ● | |
| 12 | | | | ● | ● | | | | ● | ● | | | | ● | ● | | ● | ● | |
| 13 | | | | ● | ● | | | | ● | ● | | | | ● | ● | | ● | ● | |
| 14 | | | | ● | ● | | | | ● | ● | | | | ● | ● | | ● | ● | |
| 15 | | | | ● | ● | | | | ● | ● | | | ● | ● | ● | | ● | ● | |
| 16 | | | | ● | ● | | | | ● | ● | | | ● | ● | ● | | ● | ● | |
| 17 | | | | ● | ● | | | ● | ● | ● | | | ● | ● | ● | | ● | ● | |
| 18 | | | | ● | ● | | | ● | ● | ● | | | ● | ● | ● | | ● | ● | |
| 19 | | | | ● | ● | | | ● | ● | ● | | ● | ● | ● | ● | | ● | ● | |
| 20 | | | | ● | ● | | | ● | ● | ● | | ● | ● | ● | ● | | ● | ● | |
| 21 | | | | ● | ● | | ● | ● | ● | ● | ● | ● | ● | ● | ● | | ● | ● | |
| ХП | | | | ● | ● | | ● | ● | ● | ● | ● | ● | ● | ● | ● | | ● | ● | |

Упрощенная схема работы электровоза на " С " соединении тяговых двигателей

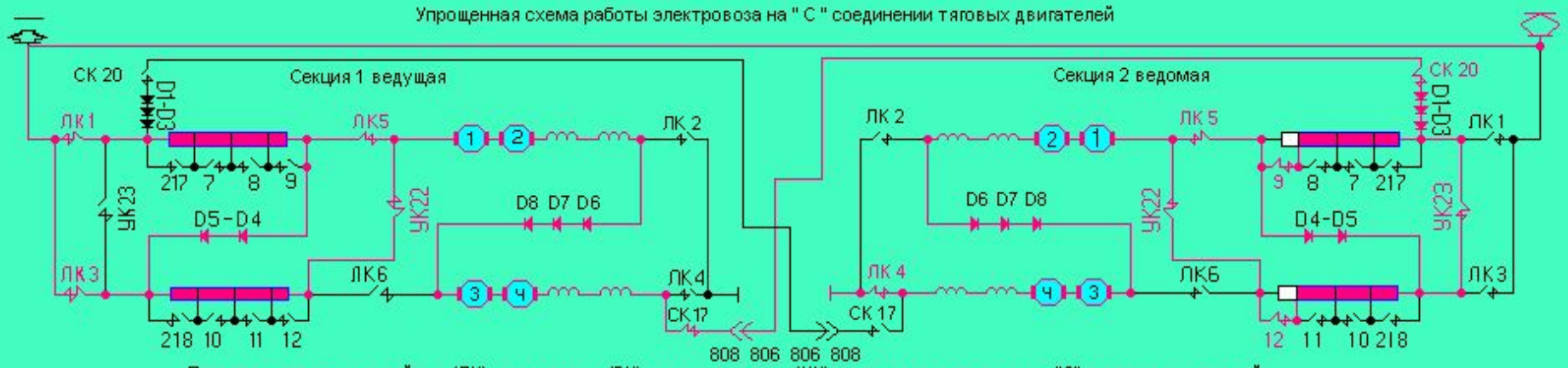


Порядок включения линейных (ЛК), реостатных (РК), уравнительных (УК) на сересном соединении "С" тяговых двигателей

Ведущая 1 секция

| № Поз | Линейные (ЛК) 1 | 2 | 3 | 4 | 5 | 6 | Реостатные (РК) 217 | 7 | 8 | 9 | 218 | 10 | 11 | 12 | 22 | 17 | 20 | УК 23 | 24 |
|---|---|---|---|---|---|---|---|---|---|---|---|---|---|---|---|---|---|---|---|
| 1 | ● | | | | | | | | | | | | | | ● | ● | | | |
| 2 | ● | | | | | | | | | | | | | | ● | ● | | | |
| 3 | ● | | | | | | | | | ● | | | | | ● | ● | | | |
| 4 | ● | | | | | | | | | ● | | | | | ● | ● | | | |
| 5 | ● | | | | | | | | ● | ● | | | | | ● | ● | | | |
| 6 | ● | | | | | | | | ● | ● | | | | | ● | ● | | | |
| 7 | ● | | ● | | | | | | | | | | | | ● | ● | | | |
| 8 | ● | | ● | | ● | | | | | | | | | | ● | ● | | | |
| 9 | ● | | ● | | ● | | | | | | | | | | ● | ● | | | |
| 10 | ● | | ● | | ● | | | | | | | | | | ● | ● | | | |
| 11 | ● | | ● | | ● | | | | | ● | | | | | ● | ● | | | |
| 12 | ● | | ● | | ● | | | | | ● | | | | | ● | ● | | | |
| 13 | ● | | ● | | ● | | | | | ● | | | | ● | ● | ● | | | |
| 14 | ● | | ● | | ● | | | | ● | ● | | | | ● | ● | ● | | | |
| 15 | ● | | ● | | ● | | | | ● | ● | | | | ● | ● | ● | | | |
| 16 | ● | | ● | | ● | | | | ● | ● | | | ● | ● | ● | ● | | | |
| 17 | ● | | ● | | ● | | | | ● | ● | | | ● | ● | ● | ● | | | |
| 18 | ● | | ● | | ● | | | ● | ● | ● | | | ● | ● | ● | ● | | | |
| 19 | ● | | ● | | ● | | | ● | ● | ● | | | ● | ● | ● | ● | | | |
| 20 | ● | | ● | | ● | | | ● | ● | ● | | ● | ● | ● | ● | ● | | | |
| 21 | ● | | ● | | ● | | | ● | ● | ● | | ● | ● | ● | ● | ● | | | |
| ХП | ● | | ● | | ● | | ● | ● | ● | ● | ● | ● | ● | ● | ● | ● | | | |

Ведомая 2 секция

| № Поз | Линейные (ЛК) 1 | 2 | 3 | 4 | 5 | 6 | Реостатные (РК) 217 | 7 | 8 | 9 | 218 | 10 | 11 | 12 | 22 | 17 | 20 | УК 23 | 24 |
|---|---|---|---|---|---|---|---|---|---|---|---|---|---|---|---|---|---|---|---|
| 1 | | | | ● | | | | | | | | | | | ● | | ● | | |
| 2 | | | | ● | | | | | | ● | | | | | ● | | ● | | |
| 3 | | | | ● | | | | | | ● | | | | | ● | | ● | | |
| 4 | | | | ● | | | | | ● | ● | | | | | ● | | ● | | |
| 5 | | | | ● | | | | | ● | ● | | | | | ● | | ● | | |
| 6 | | | | ● | | | | | ● | ● | | | | ● | ● | | ● | | |
| 7 | | | | ● | | | | | ● | ● | | | | ● | ● | | ● | | |
| 8 | | | | ● | | | | | ● | ● | | | | ● | ● | | ● | | |
| 9 | | | | ● | | | | | ● | ● | | | | ● | ● | | ● | ● | |
| 10 | | | | ● | ● | | | | | ● | | | | ● | ● | | ● | ● | |
| 11 | | | | ● | ● | | | | | ● | | | | ● | ● | | ● | ● | |
| 12 | | | | ● | ● | | | | ● | ● | | | | ● | ● | | ● | ● | |
| 13 | | | | ● | ● | | | | ● | ● | | | | ● | ● | | ● | ● | |
| 14 | | | | ● | ● | | | | ● | ● | | | | ● | ● | | ● | ● | |
| 15 | | | | ● | ● | | | | ● | ● | | | ● | ● | ● | | ● | ● | |
| 16 | | | | ● | ● | | | | ● | ● | | | ● | ● | ● | | ● | ● | |
| 17 | | | | ● | ● | | | ● | ● | ● | | | ● | ● | ● | | ● | ● | |
| 18 | | | | ● | ● | | | ● | ● | ● | | | ● | ● | ● | | ● | ● | |
| 19 | | | | ● | ● | | | ● | ● | ● | | ● | ● | ● | ● | | ● | ● | |
| 20 | | | | ● | ● | | | ● | ● | ● | | ● | ● | ● | ● | | ● | ● | |
| 21 | | | | ● | ● | | ● | ● | ● | ● | ● | ● | ● | ● | ● | | ● | ● | |
| ХП | | | | ● | ● | | ● | ● | ● | ● | ● | ● | ● | ● | ● | | ● | ● | |

Упрощенная схема работы электровоза на " С " соединении тяговых двигателей

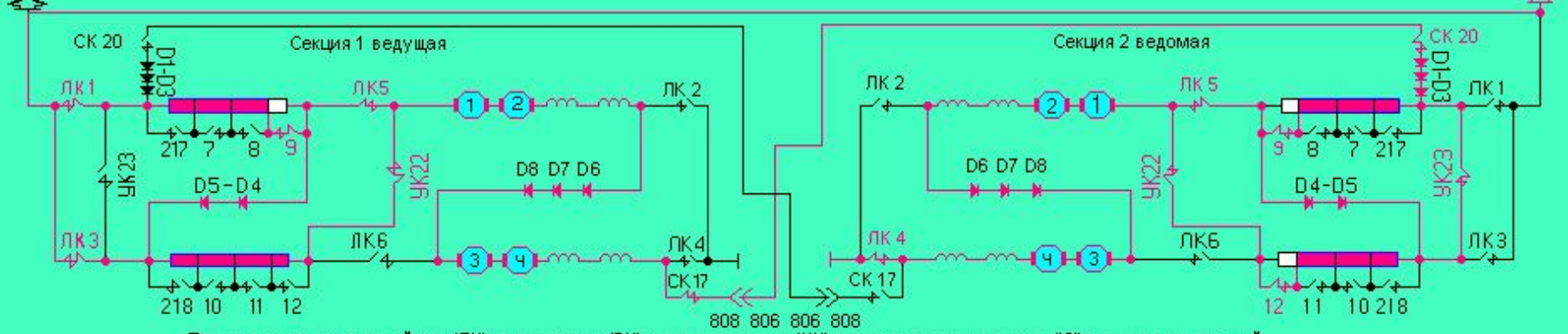


Порядок включения линейных (ЛК), реостатных (РК), уравнительных (УК) на сересном соединении "С" тяговых двигателей

Ведущая 1 секция

| № Поз | Линейные (ЛК) 1 | 2 | 3 | 4 | 5 | 6 | Реостатные (РК) 217 | 7 | 8 | 9 | 218 | 10 | 11 | 12 | 22 | 17 | 20 | УК 23 | 24 |
|---|---|---|---|---|---|---|---|---|---|---|---|---|---|---|---|---|---|---|---|
| 1 | ● | | | | | | | | | | | | | | ● | ● | | | |
| 2 | ● | | | | | | | | | | | | | | ● | ● | | | |
| 3 | ● | | | | | | | | | ● | | | | | ● | ● | | | |
| 4 | ● | | | | | | | | | ● | | | | | ● | ● | | | |
| 5 | ● | | | | | | | | ● | ● | | | | | ● | ● | | | |
| 6 | ● | | | | | | | | ● | ● | | | | | ● | ● | | | |
| 7 | ● | | ● | | | | | | | | | | | | ● | ● | | | |
| 8 | ● | | ● | | ● | | | | | | | | | | ● | ● | | | |
| 9 | ● | | ● | | ● | | | | | | | | | | ● | ● | | | |
| 10 | ● | | ● | | ● | | | | | | | | | | ● | ● | | | |
| 11 | ● | | ● | | ● | | | | | ● | | | | | ● | ● | | | |
| 12 | ● | | ● | | ● | | | | | ● | | | | | ● | ● | | | |
| 13 | ● | | ● | | ● | | | | | ● | | | | ● | ● | ● | | | |
| 14 | ● | | ● | | ● | | | | ● | ● | | | | ● | ● | ● | | | |
| 15 | ● | | ● | | ● | | | | ● | ● | | | | ● | ● | ● | | | |
| 16 | ● | | ● | | ● | | | | ● | ● | | | ● | ● | ● | ● | | | |
| 17 | ● | | ● | | ● | | | | ● | ● | | | ● | ● | ● | ● | | | |
| 18 | ● | | ● | | ● | | | ● | ● | ● | | | ● | ● | ● | ● | | | |
| 19 | ● | | ● | | ● | | | ● | ● | ● | | | ● | ● | ● | ● | | | |
| 20 | ● | | ● | | ● | | | ● | ● | ● | | ● | ● | ● | ● | ● | | | |
| 21 | ● | | ● | | ● | | | ● | ● | ● | | ● | ● | ● | ● | ● | | | |
| ХП | ● | | ● | | ● | | ● | ● | ● | ● | ● | ● | ● | ● | ● | ● | | | |

Ведомая 2 секция

| № Поз | Линейные (ЛК) 1 | 2 | 3 | 4 | 5 | 6 | Реостатные (РК) 217 | 7 | 8 | 9 | 218 | 10 | 11 | 12 | 22 | 17 | 20 | УК 23 | 24 |
|---|---|---|---|---|---|---|---|---|---|---|---|---|---|---|---|---|---|---|---|
| 1 | | | | ● | | | | | | | | | | | ● | | ● | | |
| 2 | | | | ● | | | | | | ● | | | | | ● | | ● | | |
| 3 | | | | ● | | | | | | ● | | | | | ● | | ● | | |
| 4 | | | | ● | | | | | ● | ● | | | | | ● | | ● | | |
| 5 | | | | ● | | | | | ● | ● | | | | | ● | | ● | | |
| 6 | | | | ● | | | | | ● | ● | | | | ● | ● | | ● | | |
| 7 | | | | ● | | | | | ● | ● | | | | ● | ● | | ● | | |
| 8 | | | | ● | | | | | ● | ● | | | | ● | ● | | ● | | |
| 9 | | | | ● | | | | | ● | ● | | | | ● | ● | | ● | ● | |
| 10 | | | | ● | ● | | | | | ● | | | | ● | ● | | ● | ● | |
| 11 | | | | ● | ● | | | | | ● | | | | ● | ● | | ● | ● | |
| 12 | | | | ● | ● | | | | ● | ● | | | | ● | ● | | ● | ● | |
| 13 | | | | ● | ● | | | | ● | ● | | | | ● | ● | | ● | ● | |
| 14 | | | | ● | ● | | | | ● | ● | | | | ● | ● | | ● | ● | |
| 15 | | | | ● | ● | | | | ● | ● | | | ● | ● | ● | | ● | ● | |
| 16 | | | | ● | ● | | | | ● | ● | | | ● | ● | ● | | ● | ● | |
| 17 | | | | ● | ● | | | ● | ● | ● | | | ● | ● | ● | | ● | ● | |
| 18 | | | | ● | ● | | | ● | ● | ● | | | ● | ● | ● | | ● | ● | |
| 19 | | | | ● | ● | | | ● | ● | ● | | ● | ● | ● | ● | | ● | ● | |
| 20 | | | | ● | ● | | | ● | ● | ● | | ● | ● | ● | ● | | ● | ● | |
| 21 | | | | ● | ● | | ● | ● | ● | ● | ● | ● | ● | ● | ● | | ● | ● | |
| ХП | | | | ● | ● | | ● | ● | ● | ● | ● | ● | ● | ● | ● | | ● | ● | |

Упрощенная схема работы электровоза на " С " соединении тяговых двигателей

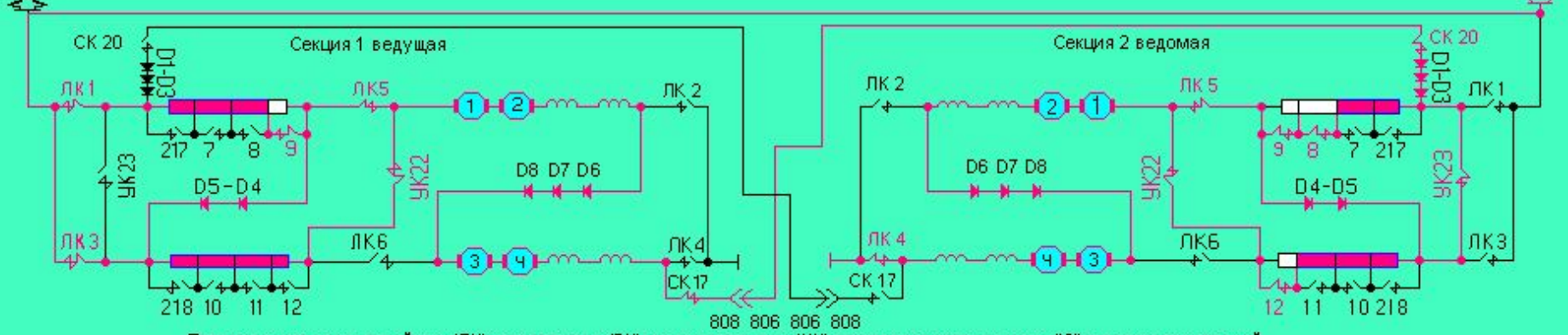


Порядок включения линейных (ЛК), реостатных (РК), уравнительных (УК) на сересном соединении "С" тяговых двигателей

Ведущая 1 секция

| № Поз | Линейные (ЛК) 1 | 2 | 3 | 4 | 5 | 6 | Реостатные (РК) 217 | 7 | 8 | 9 | 218 | 10 | 11 | 12 | 22 | 17 | 20 | УК 23 | 24 |
|---|---|---|---|---|---|---|---|---|---|---|---|---|---|---|---|---|---|---|---|
| 1 | ● | | | | | | | | | | | | | | ● | ● | | | |
| 2 | ● | | | | | | | | | | | | | | ● | ● | | | |
| 3 | ● | | | | | | | | | ● | | | | | ● | ● | | | |
| 4 | ● | | | | | | | | | ● | | | | | ● | ● | | | |
| 5 | ● | | | | | | | | ● | ● | | | | | ● | ● | | | |
| 6 | ● | | | | | | | | ● | ● | | | | | ● | ● | | | |
| 7 | ● | | ● | | | | | | | | | | | | ● | ● | | | |
| 8 | ● | | ● | | ● | | | | | | | | | | ● | ● | | | |
| 9 | ● | | ● | | ● | | | | | | | | | | ● | ● | | | |
| 10 | ● | | ● | | ● | | | | | | | | | | ● | ● | | | |
| 11 | ● | | ● | | ● | | | | | ● | | | | | ● | ● | | | |
| 12 | ● | | ● | | ● | | | | | ● | | | | | ● | ● | | | |
| 13 | ● | | ● | | ● | | | | | ● | | | | ● | ● | ● | | | |
| 14 | ● | | ● | | ● | | | | ● | ● | | | | ● | ● | ● | | | |
| 15 | ● | | ● | | ● | | | | ● | ● | | | | ● | ● | ● | | | |
| 16 | ● | | ● | | ● | | | | ● | ● | | | ● | ● | ● | ● | | | |
| 17 | ● | | ● | | ● | | | | ● | ● | | | ● | ● | ● | ● | | | |
| 18 | ● | | ● | | ● | | | ● | ● | ● | | | ● | ● | ● | ● | | | |
| 19 | ● | | ● | | ● | | | ● | ● | ● | | | ● | ● | ● | ● | | | |
| 20 | ● | | ● | | ● | | | ● | ● | ● | | ● | ● | ● | ● | ● | | | |
| 21 | ● | | ● | | ● | | | ● | ● | ● | | ● | ● | ● | ● | ● | | | |
| ХП | ● | | ● | | ● | | ● | ● | ● | ● | ● | ● | ● | ● | ● | ● | | | |

Ведомая 2 секция

| № Поз | Линейные (ЛК) 1 | 2 | 3 | 4 | 5 | 6 | Реостатные (РК) 217 | 7 | 8 | 9 | 218 | 10 | 11 | 12 | 22 | 17 | 20 | УК 23 | 24 |
|---|---|---|---|---|---|---|---|---|---|---|---|---|---|---|---|---|---|---|---|
| 1 | | | | ● | | | | | | | | | | | ● | | ● | | |
| 2 | | | | ● | | | | | | ● | | | | | ● | | ● | | |
| 3 | | | | ● | | | | | | ● | | | | | ● | | ● | | |
| 4 | | | | ● | | | | | ● | ● | | | | | ● | | ● | | |
| 5 | | | | ● | | | | | ● | ● | | | | | ● | | ● | | |
| 6 | | | | ● | | | | | ● | ● | | | | ● | ● | | ● | | |
| 7 | | | | ● | | | | | ● | ● | | | | ● | ● | | ● | | |
| 8 | | | | ● | | | | | ● | ● | | | | ● | ● | | ● | | |
| 9 | | | | ● | | | | | ● | ● | | | | ● | ● | | ● | ● | |
| 10 | | | | ● | ● | | | | | ● | | | | ● | ● | | ● | ● | |
| 11 | | | | ● | ● | | | | | ● | | | | ● | ● | | ● | ● | |
| 12 | | | | ● | ● | | | | ● | ● | | | | ● | ● | | ● | ● | |
| 13 | | | | ● | ● | | | | ● | ● | | | | ● | ● | | ● | ● | |
| 14 | | | | ● | ● | | | | ● | ● | | | | ● | ● | | ● | ● | |
| 15 | | | | ● | ● | | | | ● | ● | | | ● | ● | ● | | ● | ● | |
| 16 | | | | ● | ● | | | | ● | ● | | | ● | ● | ● | | ● | ● | |
| 17 | | | | ● | ● | | | ● | ● | ● | | | ● | ● | ● | | ● | ● | |
| 18 | | | | ● | ● | | | ● | ● | ● | | | ● | ● | ● | | ● | ● | |
| 19 | | | | ● | ● | | | ● | ● | ● | | ● | ● | ● | ● | | ● | ● | |
| 20 | | | | ● | ● | | | ● | ● | ● | | ● | ● | ● | ● | | ● | ● | |
| 21 | | | | ● | ● | | ● | ● | ● | ● | ● | ● | ● | ● | ● | | ● | ● | |
| ХП | | | | ● | ● | | ● | ● | ● | ● | ● | ● | ● | ● | ● | | ● | ● | |

Упрощенная схема работы электровоза на " С " соединении тяговых двигателей

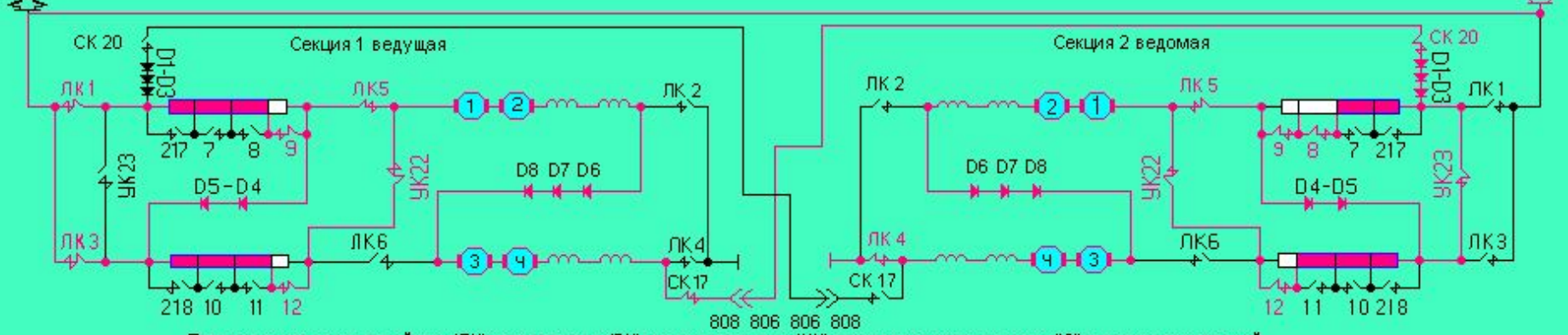


Порядок включения линейных (ЛК), реостатных (РК), уравнительных (УК) на сересном соединении "С" тяговых двигателей

Ведущая 1 секция

| № Поз | Линейные (ЛК) 1 | 2 | 3 | 4 | 5 | 6 | Реостатные (РК) 217 | 7 | 8 | 9 | 218 | 10 | 11 | 12 | 22 | 17 | 20 | УК 23 | 24 |
|---|---|---|---|---|---|---|---|---|---|---|---|---|---|---|---|---|---|---|---|
| 1 | ● | | | | | | | | | | | | | | ● | ● | | | |
| 2 | ● | | | | | | | | | | | | | | ● | ● | | | |
| 3 | ● | | | | | | | | | ● | | | | | ● | ● | | | |
| 4 | ● | | | | | | | | | ● | | | | | ● | ● | | | |
| 5 | ● | | | | | | | | ● | ● | | | | | ● | ● | | | |
| 6 | ● | | | | | | | | ● | ● | | | | | ● | ● | | | |
| 7 | ● | | ● | | | | | | | | | | | | ● | ● | | | |
| 8 | ● | | ● | | ● | | | | | | | | | | ● | ● | | | |
| 9 | ● | | ● | | ● | | | | | | | | | | ● | ● | | | |
| 10 | ● | | ● | | ● | | | | | | | | | | ● | ● | | | |
| 11 | ● | | ● | | ● | | | | | ● | | | | | ● | ● | | | |
| 12 | ● | | ● | | ● | | | | | ● | | | | | ● | ● | | | |
| 13 | ● | | ● | | ● | | | | | ● | | | | ● | ● | ● | | | |
| 14 | ● | | ● | | ● | | | | ● | ● | | | | ● | ● | ● | | | |
| 15 | ● | | ● | | ● | | | | ● | ● | | | | ● | ● | ● | | | |
| 16 | ● | | ● | | ● | | | | ● | ● | | | ● | ● | ● | ● | | | |
| 17 | ● | | ● | | ● | | | | ● | ● | | | ● | ● | ● | ● | | | |
| 18 | ● | | ● | | ● | | | ● | ● | ● | | | ● | ● | ● | ● | | | |
| 19 | ● | | ● | | ● | | | ● | ● | ● | | | ● | ● | ● | ● | | | |
| 20 | ● | | ● | | ● | | | ● | ● | ● | | ● | ● | ● | ● | ● | | | |
| 21 | ● | | ● | | ● | | | ● | ● | ● | | ● | ● | ● | ● | ● | | | |
| ХП | ● | | ● | | ● | | ● | ● | ● | ● | ● | ● | ● | ● | ● | ● | | | |

Ведомая 2 секция

| № Поз | Линейные (ЛК) 1 | 2 | 3 | 4 | 5 | 6 | Реостатные (РК) 217 | 7 | 8 | 9 | 218 | 10 | 11 | 12 | 22 | 17 | 20 | УК 23 | 24 |
|---|---|---|---|---|---|---|---|---|---|---|---|---|---|---|---|---|---|---|---|
| 1 | | | | ● | | | | | | | | | | | ● | | ● | | |
| 2 | | | | ● | | | | | | ● | | | | | ● | | ● | | |
| 3 | | | | ● | | | | | | ● | | | | | ● | | ● | | |
| 4 | | | | ● | | | | | ● | ● | | | | | ● | | ● | | |
| 5 | | | | ● | | | | | ● | ● | | | | | ● | | ● | | |
| 6 | | | | ● | | | | | ● | ● | | | | ● | ● | | ● | | |
| 7 | | | | ● | | | | | ● | ● | | | | ● | ● | | ● | | |
| 8 | | | | ● | | | | | ● | ● | | | | ● | ● | | ● | | |
| 9 | | | | ● | | | | | ● | ● | | | | ● | ● | | ● | ● | |
| 10 | | | | ● | ● | | | | | ● | | | | ● | ● | | ● | ● | |
| 11 | | | | ● | ● | | | | | ● | | | | ● | ● | | ● | ● | |
| 12 | | | | ● | ● | | | | ● | ● | | | | ● | ● | | ● | ● | |
| 13 | | | | ● | ● | | | | ● | ● | | | | ● | ● | | ● | ● | |
| 14 | | | | ● | ● | | | | ● | ● | | | | ● | ● | | ● | ● | |
| 15 | | | | ● | ● | | | | ● | ● | | | ● | ● | ● | | ● | ● | |
| 16 | | | | ● | ● | | | | ● | ● | | | ● | ● | ● | | ● | ● | |
| 17 | | | | ● | ● | | | ● | ● | ● | | | ● | ● | ● | | ● | ● | |
| 18 | | | | ● | ● | | | ● | ● | ● | | | ● | ● | ● | | ● | ● | |
| 19 | | | | ● | ● | | | ● | ● | ● | | ● | ● | ● | ● | | ● | ● | |
| 20 | | | | ● | ● | | | ● | ● | ● | | ● | ● | ● | ● | | ● | ● | |
| 21 | | | | ● | ● | | ● | ● | ● | ● | ● | ● | ● | ● | ● | | ● | ● | |
| ХП | | | | ● | ● | | ● | ● | ● | ● | ● | ● | ● | ● | ● | | ● | ● | |

Упрощенная схема работы электровоза на " С " соединении тяговых двигателей

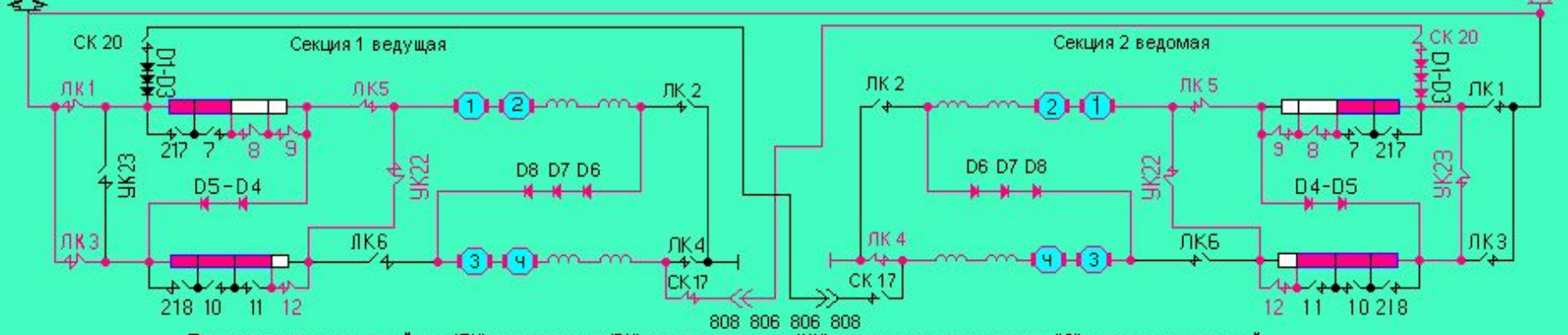


Порядок включения линейных (ЛК), реостатных (РК), уравнительных (УК) на сересном соединении "С" тяговых двигателей

Ведущая 1 секция

| № Поз | Линейные (ЛК) 1 | 2 | 3 | 4 | 5 | 6 | Реостатные (РК) 217 | 7 | 8 | 9 | 218 | 10 | 11 | 12 | 22 | 17 | 20 | УК 23 | 24 |
|---|---|---|---|---|---|---|---|---|---|---|---|---|---|---|---|---|---|---|---|
| 1 | ● | | | | | | | | | | | | | | ● | ● | | | |
| 2 | ● | | | | | | | | | | | | | | ● | ● | | | |
| 3 | ● | | | | | | | | | ● | | | | | ● | ● | | | |
| 4 | ● | | | | | | | | | ● | | | | | ● | ● | | | |
| 5 | ● | | | | | | | | ● | ● | | | | | ● | ● | | | |
| 6 | ● | | | | | | | | ● | ● | | | | | ● | ● | | | |
| 7 | ● | | ● | | | | | | | | | | | | ● | ● | | | |
| 8 | ● | | ● | | ● | | | | | | | | | | ● | ● | | | |
| 9 | ● | | ● | | ● | | | | | | | | | | ● | ● | | | |
| 10 | ● | | ● | | ● | | | | | | | | | | ● | ● | | | |
| 11 | ● | | ● | | ● | | | | | ● | | | | | ● | ● | | | |
| 12 | ● | | ● | | ● | | | | | ● | | | | | ● | ● | | | |
| 13 | ● | | ● | | ● | | | | | ● | | | | ● | ● | ● | | | |
| 14 | ● | | ● | | ● | | | | ● | ● | | | | ● | ● | ● | | | |
| 15 | ● | | ● | | ● | | | | ● | ● | | | | ● | ● | ● | | | |
| 16 | ● | | ● | | ● | | | | ● | ● | | | ● | ● | ● | ● | | | |
| 17 | ● | | ● | | ● | | | | ● | ● | | | ● | ● | ● | ● | | | |
| 18 | ● | | ● | | ● | | | ● | ● | ● | | | ● | ● | ● | ● | | | |
| 19 | ● | | ● | | ● | | | ● | ● | ● | | | ● | ● | ● | ● | | | |
| 20 | ● | | ● | | ● | | | ● | ● | ● | | ● | ● | ● | ● | ● | | | |
| 21 | ● | | ● | | ● | | | ● | ● | ● | | ● | ● | ● | ● | ● | | | |
| ХП | ● | | ● | | ● | | ● | ● | ● | ● | ● | ● | ● | ● | ● | ● | | | |

Ведомая 2 секция

| № Поз | Линейные (ЛК) 1 | 2 | 3 | 4 | 5 | 6 | Реостатные (РК) 217 | 7 | 8 | 9 | 218 | 10 | 11 | 12 | 22 | 17 | 20 | УК 23 | 24 |
|---|---|---|---|---|---|---|---|---|---|---|---|---|---|---|---|---|---|---|---|
| 1 | | | | ● | | | | | | | | | | | ● | | ● | | |
| 2 | | | | ● | | | | | | ● | | | | | ● | | ● | | |
| 3 | | | | ● | | | | | | ● | | | | | ● | | ● | | |
| 4 | | | | ● | | | | | ● | ● | | | | | ● | | ● | | |
| 5 | | | | ● | | | | | ● | ● | | | | | ● | | ● | | |
| 6 | | | | ● | | | | | ● | ● | | | | ● | ● | | ● | | |
| 7 | | | | ● | | | | | ● | ● | | | | ● | ● | | ● | | |
| 8 | | | | ● | | | | | ● | ● | | | | ● | ● | | ● | | |
| 9 | | | | ● | | | | | ● | ● | | | | ● | ● | | ● | ● | |
| 10 | | | | ● | ● | | | | | ● | | | | ● | ● | | ● | ● | |
| 11 | | | | ● | ● | | | | | ● | | | | ● | ● | | ● | ● | |
| 12 | | | | ● | ● | | | | ● | ● | | | | ● | ● | | ● | ● | |
| 13 | | | | ● | ● | | | | ● | ● | | | | ● | ● | | ● | ● | |
| 14 | | | | ● | ● | | | | ● | ● | | | | ● | ● | | ● | ● | |
| 15 | | | | ● | ● | | | | ● | ● | | | ● | ● | ● | | ● | ● | |
| 16 | | | | ● | ● | | | | ● | ● | | | ● | ● | ● | | ● | ● | |
| 17 | | | | ● | ● | | | ● | ● | ● | | | ● | ● | ● | | ● | ● | |
| 18 | | | | ● | ● | | | ● | ● | ● | | | ● | ● | ● | | ● | ● | |
| 19 | | | | ● | ● | | | ● | ● | ● | | ● | ● | ● | ● | | ● | ● | |
| 20 | | | | ● | ● | | | ● | ● | ● | | ● | ● | ● | ● | | ● | ● | |
| 21 | | | | ● | ● | | ● | ● | ● | ● | ● | ● | ● | ● | ● | | ● | ● | |
| ХП | | | | ● | ● | | ● | ● | ● | ● | ● | ● | ● | ● | ● | | ● | ● | |

Упрощенная схема работы электровоза на " С " соединении тяговых двигателей

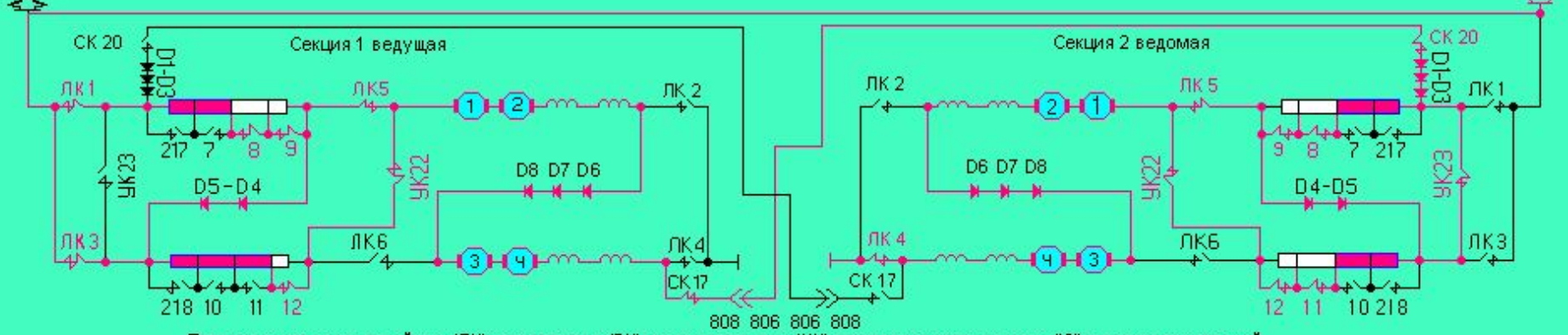


Порядок включения линейных (ЛК), реостатных (РК), уравнительных (УК) на сересном соединении "С" тяговых двигателей

Ведущая 1 секция

| № Поз | Линейные (ЛК) 1 | 2 | 3 | 4 | 5 | 6 | Реостатные (РК) 217 | 7 | 8 | 9 | 218 | 10 | 11 | 12 | 22 | 17 | 20 | УК 23 | 24 |
|---|---|---|---|---|---|---|---|---|---|---|---|---|---|---|---|---|---|---|---|
| 1 | ● | | | | | | | | | | | | | | ● | ● | | | |
| 2 | ● | | | | | | | | | | | | | | ● | ● | | | |
| 3 | ● | | | | | | | | | ● | | | | | ● | ● | | | |
| 4 | ● | | | | | | | | | ● | | | | | ● | ● | | | |
| 5 | ● | | | | | | | | ● | ● | | | | | ● | ● | | | |
| 6 | ● | | | | | | | | ● | ● | | | | | ● | ● | | | |
| 7 | ● | | ● | | | | | | | | | | | | ● | ● | | | |
| 8 | ● | | ● | | ● | | | | | | | | | | ● | ● | | | |
| 9 | ● | | ● | | ● | | | | | | | | | | ● | ● | | | |
| 10 | ● | | ● | | ● | | | | | | | | | | ● | ● | | | |
| 11 | ● | | ● | | ● | | | | | ● | | | | | ● | ● | | | |
| 12 | ● | | ● | | ● | | | | | ● | | | | | ● | ● | | | |
| 13 | ● | | ● | | ● | | | | | ● | | | | ● | ● | ● | | | |
| 14 | ● | | ● | | ● | | | | ● | ● | | | | ● | ● | ● | | | |
| 15 | ● | | ● | | ● | | | | ● | ● | | | | ● | ● | ● | | | |
| 16 | ● | | ● | | ● | | | | ● | ● | | | ● | ● | ● | ● | | | |
| 17 | ● | | ● | | ● | | | | ● | ● | | | ● | ● | ● | ● | | | |
| 18 | ● | | ● | | ● | | | ● | ● | ● | | | ● | ● | ● | ● | | | |
| 19 | ● | | ● | | ● | | | ● | ● | ● | | | ● | ● | ● | ● | | | |
| 20 | ● | | ● | | ● | | | ● | ● | ● | | ● | ● | ● | ● | ● | | | |
| 21 | ● | | ● | | ● | | | ● | ● | ● | | ● | ● | ● | ● | ● | | | |
| ХП | ● | | ● | | ● | | ● | ● | ● | ● | ● | ● | ● | ● | ● | ● | | | |

Ведомая 2 секция

| № Поз | Линейные (ЛК) 1 | 2 | 3 | 4 | 5 | 6 | Реостатные (РК) 217 | 7 | 8 | 9 | 218 | 10 | 11 | 12 | 22 | 17 | 20 | УК 23 | 24 |
|---|---|---|---|---|---|---|---|---|---|---|---|---|---|---|---|---|---|---|---|
| 1 | | | | ● | | | | | | | | | | | ● | | ● | | |
| 2 | | | | ● | | | | | | ● | | | | | ● | | ● | | |
| 3 | | | | ● | | | | | | ● | | | | | ● | | ● | | |
| 4 | | | | ● | | | | | ● | ● | | | | | ● | | ● | | |
| 5 | | | | ● | | | | | ● | ● | | | | | ● | | ● | | |
| 6 | | | | ● | | | | | ● | ● | | | | ● | ● | | ● | | |
| 7 | | | | ● | | | | | ● | ● | | | | ● | ● | | ● | | |
| 8 | | | | ● | | | | | ● | ● | | | | ● | ● | | ● | | |
| 9 | | | | ● | | | | | ● | ● | | | | ● | ● | | ● | ● | |
| 10 | | | | ● | ● | | | | | ● | | | | ● | ● | | ● | ● | |
| 11 | | | | ● | ● | | | | | ● | | | | ● | ● | | ● | ● | |
| 12 | | | | ● | ● | | | | ● | ● | | | | ● | ● | | ● | ● | |
| 13 | | | | ● | ● | | | | ● | ● | | | | ● | ● | | ● | ● | |
| 14 | | | | ● | ● | | | | ● | ● | | | | ● | ● | | ● | ● | |
| 15 | | | | ● | ● | | | | ● | ● | | | ● | ● | ● | | ● | ● | |
| 16 | | | | ● | ● | | | | ● | ● | | | ● | ● | ● | | ● | ● | |
| 17 | | | | ● | ● | | | ● | ● | ● | | | ● | ● | ● | | ● | ● | |
| 18 | | | | ● | ● | | | ● | ● | ● | | | ● | ● | ● | | ● | ● | |
| 19 | | | | ● | ● | | | ● | ● | ● | | ● | ● | ● | ● | | ● | ● | |
| 20 | | | | ● | ● | | | ● | ● | ● | | ● | ● | ● | ● | | ● | ● | |
| 21 | | | | ● | ● | | ● | ● | ● | ● | ● | ● | ● | ● | ● | | ● | ● | |
| ХП | | | | ● | ● | | ● | ● | ● | ● | ● | ● | ● | ● | ● | | ● | ● | |

Упрощенная схема работы электровоза на " С " соединении тяговых двигателей

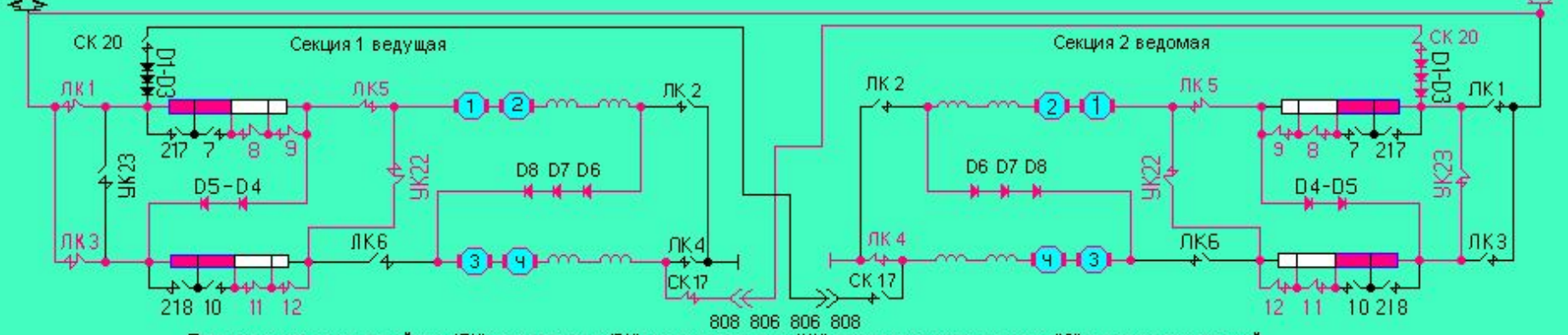


Порядок включения линейных (ЛК), реостатных (РК), уравнительных (УК) на сересном соединении "С" тяговых двигателей

Ведущая 1 секция

| № Поз | Линейные (ЛК) 1 | 2 | 3 | 4 | 5 | 6 | Реостатные (РК) 217 | 7 | 8 | 9 | 218 | 10 | 11 | 12 | 22 | 17 | 20 | УК 23 | 24 |
|---|---|---|---|---|---|---|---|---|---|---|---|---|---|---|---|---|---|---|---|
| 1 | ● | | | | | | | | | | | | | | ● | ● | | | |
| 2 | ● | | | | | | | | | | | | | | ● | ● | | | |
| 3 | ● | | | | | | | | | ● | | | | | ● | ● | | | |
| 4 | ● | | | | | | | | | ● | | | | | ● | ● | | | |
| 5 | ● | | | | | | | | ● | ● | | | | | ● | ● | | | |
| 6 | ● | | | | | | | | ● | ● | | | | | ● | ● | | | |
| 7 | ● | | ● | | | | | | | | | | | | ● | ● | | | |
| 8 | ● | | ● | | ● | | | | | | | | | | ● | ● | | | |
| 9 | ● | | ● | | ● | | | | | | | | | | ● | ● | | | |
| 10 | ● | | ● | | ● | | | | | | | | | | ● | ● | | | |
| 11 | ● | | ● | | ● | | | | | ● | | | | | ● | ● | | | |
| 12 | ● | | ● | | ● | | | | | ● | | | | | ● | ● | | | |
| 13 | ● | | ● | | ● | | | | | ● | | | | ● | ● | ● | | | |
| 14 | ● | | ● | | ● | | | | ● | ● | | | | ● | ● | ● | | | |
| 15 | ● | | ● | | ● | | | | ● | ● | | | | ● | ● | ● | | | |
| 16 | ● | | ● | | ● | | | | ● | ● | | | ● | ● | ● | ● | | | |
| 17 | ● | | ● | | ● | | | | ● | ● | | | ● | ● | ● | ● | | | |
| 18 | ● | | ● | | ● | | | ● | ● | ● | | | ● | ● | ● | ● | | | |
| 19 | ● | | ● | | ● | | | ● | ● | ● | | | ● | ● | ● | ● | | | |
| 20 | ● | | ● | | ● | | | ● | ● | ● | | ● | ● | ● | ● | ● | | | |
| 21 | ● | | ● | | ● | | | ● | ● | ● | | ● | ● | ● | ● | ● | | | |
| ХП | ● | | ● | | ● | | ● | ● | ● | ● | ● | ● | ● | ● | ● | ● | | | |

Ведомая 2 секция

| № Поз | Линейные (ЛК) 1 | 2 | 3 | 4 | 5 | 6 | Реостатные (РК) 217 | 7 | 8 | 9 | 218 | 10 | 11 | 12 | 22 | 17 | 20 | УК 23 | 24 |
|---|---|---|---|---|---|---|---|---|---|---|---|---|---|---|---|---|---|---|---|
| 1 | | | | ● | | | | | | | | | | | ● | | ● | | |
| 2 | | | | ● | | | | | | ● | | | | | ● | | ● | | |
| 3 | | | | ● | | | | | | ● | | | | | ● | | ● | | |
| 4 | | | | ● | | | | | ● | ● | | | | | ● | | ● | | |
| 5 | | | | ● | | | | | ● | ● | | | | | ● | | ● | | |
| 6 | | | | ● | | | | | ● | ● | | | | ● | ● | | ● | | |
| 7 | | | | ● | | | | | ● | ● | | | | ● | ● | | ● | | |
| 8 | | | | ● | | | | | ● | ● | | | | ● | ● | | ● | | |
| 9 | | | | ● | | | | | ● | ● | | | | ● | ● | | ● | ● | |
| 10 | | | | ● | ● | | | | | ● | | | | ● | ● | | ● | ● | |
| 11 | | | | ● | ● | | | | | ● | | | | ● | ● | | ● | ● | |
| 12 | | | | ● | ● | | | | ● | ● | | | | ● | ● | | ● | ● | |
| 13 | | | | ● | ● | | | | ● | ● | | | | ● | ● | | ● | ● | |
| 14 | | | | ● | ● | | | | ● | ● | | | | ● | ● | | ● | ● | |
| 15 | | | | ● | ● | | | | ● | ● | | | ● | ● | ● | | ● | ● | |
| 16 | | | | ● | ● | | | | ● | ● | | | ● | ● | ● | | ● | ● | |
| 17 | | | | ● | ● | | | ● | ● | ● | | | ● | ● | ● | | ● | ● | |
| 18 | | | | ● | ● | | | ● | ● | ● | | | ● | ● | ● | | ● | ● | |
| 19 | | | | ● | ● | | | ● | ● | ● | | ● | ● | ● | ● | | ● | ● | |
| 20 | | | | ● | ● | | | ● | ● | ● | | ● | ● | ● | ● | | ● | ● | |
| 21 | | | | ● | ● | | ● | ● | ● | ● | ● | ● | ● | ● | ● | | ● | ● | |
| ХП | | | | ● | ● | | ● | ● | ● | ● | ● | ● | ● | ● | ● | | ● | ● | |

Упрощенная схема работы электровоза на " С " соединении тяговых двигателей

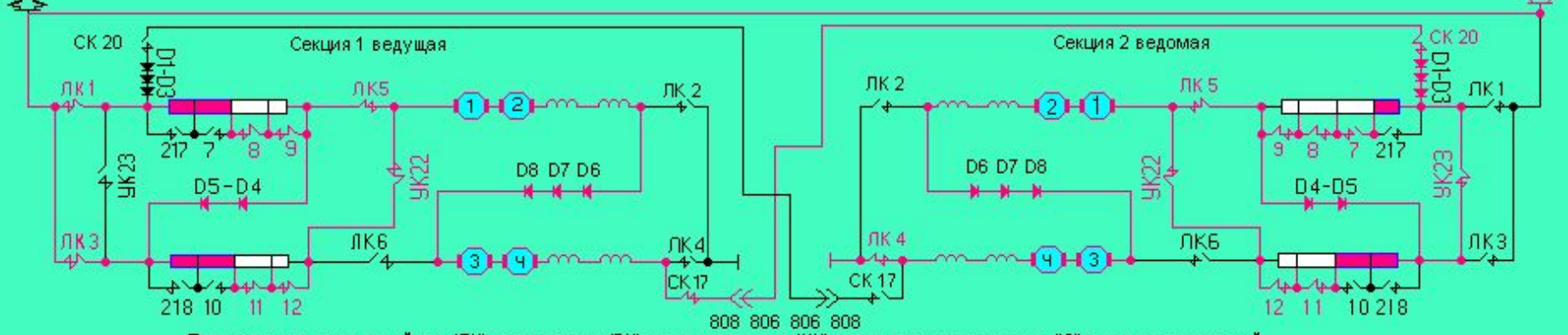


Порядок включения линейных (ЛК), реостатных (РК), уравнительных (УК) на сересном соединении "С" тяговых двигателей

Ведущая 1 секция

| № | Линейные (ЛК) | | | | | | Реостатные (РК) | | | | | | | | | | | УК | |
|---|---|---|---|---|---|---|---|---|---|---|---|---|---|---|---|---|---|---|---|
| Поз | 1 | 2 | 3 | 4 | 5 | 6 | 217 | 7 | 8 | 9 | 218 | 10 | 11 | 12 | 22 | 17 | 20 | 23 | 24 |
| 1 | ● | | | | | | | | | | | | | | ● | ● | | | |
| 2 | ● | | | | | | | | | | | | | | ● | ● | | | |
| 3 | ● | | | | | | | | | ● | | | | | ● | ● | | | |
| 4 | ● | | | | | | | | | ● | | | | | ● | ● | | | |
| 5 | ● | | | | | | | | ● | ● | | | | | ● | ● | | | |
| 6 | ● | | | | | | | | ● | ● | | | | | ● | ● | | | |
| 7 | ● | | ● | | | | | | | | | | | | ● | ● | | | |
| 8 | ● | | ● | | ● | | | | | | | | | | ● | ● | | | |
| 9 | ● | | ● | | ● | | | | | | | | | | ● | ● | | | |
| 10 | ● | | ● | | ● | | | | | | | | | | ● | ● | | | |
| 11 | ● | | ● | | ● | | | | | ● | | | | | ● | ● | | | |
| 12 | ● | | ● | | ● | | | | | ● | | | | | ● | ● | | | |
| 13 | ● | | ● | | ● | | | | | ● | | | | ● | ● | ● | | | |
| 14 | ● | | ● | | ● | | | | ● | ● | | | | ● | ● | ● | | | |
| 15 | ● | | ● | | ● | | | | ● | ● | | | | ● | ● | ● | | | |
| 16 | ● | | ● | | ● | | | | ● | ● | | | ● | ● | ● | ● | | | |
| 17 | ● | | ● | | ● | | | | ● | ● | | | ● | ● | ● | ● | | | |
| 18 | ● | | ● | | ● | | | ● | ● | ● | | | ● | ● | ● | ● | | | |
| 19 | ● | | ● | | ● | | | ● | ● | ● | | | ● | ● | ● | ● | | | |
| 20 | ● | | ● | | ● | | | ● | ● | ● | | ● | ● | ● | ● | ● | | | |
| 21 | ● | | ● | | ● | | | ● | ● | ● | | ● | ● | ● | ● | ● | | | |
| ХП | ● | | ● | | ● | | ● | ● | ● | ● | ● | ● | ● | ● | ● | ● | | | |

Ведомая 2 секция

| № | Линейные (ЛК) | | | | | | Реостатные (РК) | | | | | | | | | | | УК | |
|---|---|---|---|---|---|---|---|---|---|---|---|---|---|---|---|---|---|---|---|
| Поз | 1 | 2 | 3 | 4 | 5 | 6 | 217 | 7 | 8 | 9 | 218 | 10 | 11 | 12 | 22 | 17 | 20 | 23 | 24 |
| 1 | | | | ● | | | | | | | | | | | ● | | ● | | |
| 2 | | | | ● | | | | | | ● | | | | | ● | | ● | | |
| 3 | | | | ● | | | | | | ● | | | | | ● | | ● | | |
| 4 | | | | ● | | | | | ● | ● | | | | | ● | | ● | | |
| 5 | | | | ● | | | | | ● | ● | | | | | ● | | ● | | |
| 6 | | | | ● | | | | | ● | ● | | | | ● | ● | | ● | | |
| 7 | | | | ● | | | | | ● | ● | | | | ● | ● | | ● | | |
| 8 | | | | ● | | | | | ● | ● | | | | ● | ● | | ● | | |
| 9 | | | | ● | | | | | ● | ● | | | | ● | ● | | ● | ● | |
| 10 | | | | ● | ● | | | | | ● | | | | ● | ● | | ● | ● | |
| 11 | | | | ● | ● | | | | | ● | | | | ● | ● | | ● | ● | |
| 12 | | | | ● | ● | | | | ● | ● | | | | ● | ● | | ● | ● | |
| 13 | | | | ● | ● | | | | ● | ● | | | | ● | ● | | ● | ● | |
| 14 | | | | ● | ● | | | | ● | ● | | | | ● | ● | | ● | ● | |
| 15 | | | | ● | ● | | | | ● | ● | | | ● | ● | ● | | ● | ● | |
| 16 | | | | ● | ● | | | | ● | ● | | | ● | ● | ● | | ● | ● | |
| 17 | | | | ● | ● | | | ● | ● | ● | | | ● | ● | ● | | ● | ● | |
| 18 | | | | ● | ● | | | ● | ● | ● | | | ● | ● | ● | | ● | ● | |
| 19 | | | | ● | ● | | | ● | ● | ● | | ● | ● | ● | ● | | ● | ● | |
| 20 | | | | ● | ● | | | ● | ● | ● | | ● | ● | ● | ● | | ● | ● | |
| 21 | | | | ● | ● | | ● | ● | ● | ● | ● | ● | ● | ● | ● | | ● | ● | |
| ХП | | | | ● | ● | | ● | ● | ● | ● | ● | ● | ● | ● | ● | | ● | ● | |

Упрощенная схема работы электровоза на " С " соединении тяговых двигателей

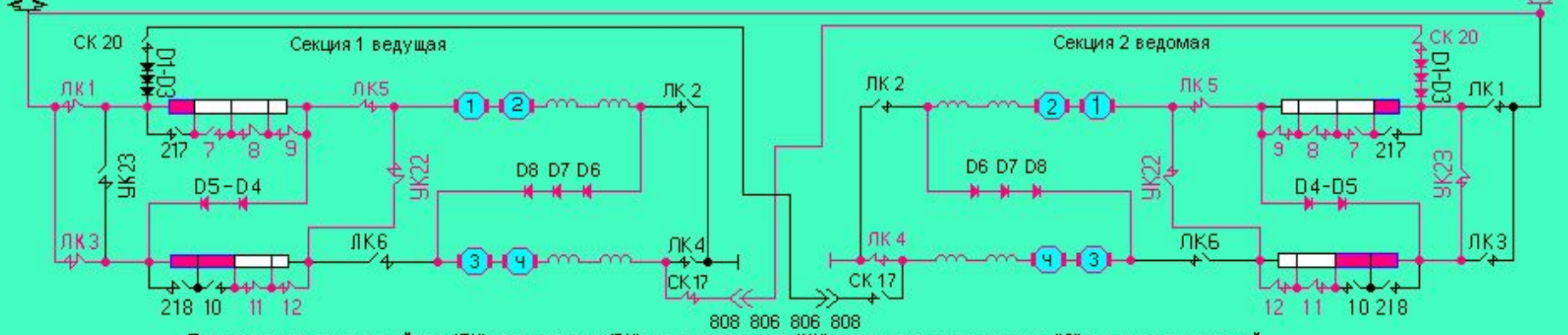


Порядок включения линейных (ЛК), реостатных (РК), уравнительных (УК) на сересном соединении "С" тяговых двигателей

Ведущая 1 секция

| № | Линейные (ЛК) | | | | | | Реостатные (РК) | | | | | | | | | | | УК | |
|---|---|---|---|---|---|---|---|---|---|---|---|---|---|---|---|---|---|---|---|
| Поз | 1 | 2 | 3 | 4 | 5 | 6 | 217 | 7 | 8 | 9 | 218 | 10 | 11 | 12 | 22 | 17 | 20 | 23 | 24 |
| 1 | ● | | | | | | | | | | | | | | ● | ● | | | |
| 2 | ● | | | | | | | | | | | | | | ● | ● | | | |
| 3 | ● | | | | | | | | | ● | | | | | ● | ● | | | |
| 4 | ● | | | | | | | | | ● | | | | | ● | ● | | | |
| 5 | ● | | | | | | | | ● | ● | | | | | ● | ● | | | |
| 6 | ● | | | | | | | | ● | ● | | | | | ● | ● | | | |
| 7 | ● | | ● | | | | | | | | | | | | ● | ● | | | |
| 8 | ● | | ● | | ● | | | | | | | | | | ● | ● | | | |
| 9 | ● | | ● | | ● | | | | | | | | | | ● | ● | | | |
| 10 | ● | | ● | | ● | | | | | | | | | | ● | ● | | | |
| 11 | ● | | ● | | ● | | | | | ● | | | | | ● | ● | | | |
| 12 | ● | | ● | | ● | | | | | ● | | | | | ● | ● | | | |
| 13 | ● | | ● | | ● | | | | | ● | | | | ● | ● | ● | | | |
| 14 | ● | | ● | | ● | | | | ● | ● | | | | ● | ● | ● | | | |
| 15 | ● | | ● | | ● | | | | ● | ● | | | | ● | ● | ● | | | |
| 16 | ● | | ● | | ● | | | | ● | ● | | | ● | ● | ● | ● | | | |
| 17 | ● | | ● | | ● | | | | ● | ● | | | ● | ● | ● | ● | | | |
| 18 | ● | | ● | | ● | | | ● | ● | ● | | | ● | ● | ● | ● | | | |
| 19 | ● | | ● | | ● | | | ● | ● | ● | | | ● | ● | ● | ● | | | |
| 20 | ● | | ● | | ● | | | ● | ● | ● | | ● | ● | ● | ● | ● | | | |
| 21 | ● | | ● | | ● | | | ● | ● | ● | | ● | ● | ● | ● | ● | | | |
| ХП | ● | | ● | | ● | | ● | ● | ● | ● | ● | ● | ● | ● | ● | ● | | | |

Ведомая 2 секция

| № | Линейные (ЛК) | | | | | | Реостатные (РК) | | | | | | | | | | | УК | |
|---|---|---|---|---|---|---|---|---|---|---|---|---|---|---|---|---|---|---|---|
| Поз | 1 | 2 | 3 | 4 | 5 | 6 | 217 | 7 | 8 | 9 | 218 | 10 | 11 | 12 | 22 | 17 | 20 | 23 | 24 |
| 1 | | | | ● | | | | | | | | | | | ● | | ● | | |
| 2 | | | | ● | | | | | | ● | | | | | ● | | ● | | |
| 3 | | | | ● | | | | | | ● | | | | | ● | | ● | | |
| 4 | | | | ● | | | | | ● | ● | | | | | ● | | ● | | |
| 5 | | | | ● | | | | | ● | ● | | | | | ● | | ● | | |
| 6 | | | | ● | | | | | ● | ● | | | | ● | ● | | ● | | |
| 7 | | | | ● | | | | | ● | ● | | | | ● | ● | | ● | | |
| 8 | | | | ● | | | | | ● | ● | | | | ● | ● | | ● | | |
| 9 | | | | ● | | | | | ● | ● | | | | ● | ● | | ● | ● | |
| 10 | | | | ● | ● | | | | | ● | | | | ● | ● | | ● | ● | |
| 11 | | | | ● | ● | | | | | ● | | | | ● | ● | | ● | ● | |
| 12 | | | | ● | ● | | | | ● | ● | | | | ● | ● | | ● | ● | |
| 13 | | | | ● | ● | | | | ● | ● | | | | ● | ● | | ● | ● | |
| 14 | | | | ● | ● | | | | ● | ● | | | | ● | ● | | ● | ● | |
| 15 | | | | ● | ● | | | | ● | ● | | | ● | ● | ● | | ● | ● | |
| 16 | | | | ● | ● | | | | ● | ● | | | ● | ● | ● | | ● | ● | |
| 17 | | | | ● | ● | | | ● | ● | ● | | | ● | ● | ● | | ● | ● | |
| 18 | | | | ● | ● | | | ● | ● | ● | | | ● | ● | ● | | ● | ● | |
| 19 | | | | ● | ● | | | ● | ● | ● | | ● | ● | ● | ● | | ● | ● | |
| 20 | | | | ● | ● | | | ● | ● | ● | | ● | ● | ● | ● | | ● | ● | |
| 21 | | | | ● | ● | | ● | ● | ● | ● | ● | ● | ● | ● | ● | | ● | ● | |
| ХП | | | | ● | ● | | ● | ● | ● | ● | ● | ● | ● | ● | ● | | ● | ● | |

Упрощенная схема работы электровоза на " С " соединении тяговых двигателей

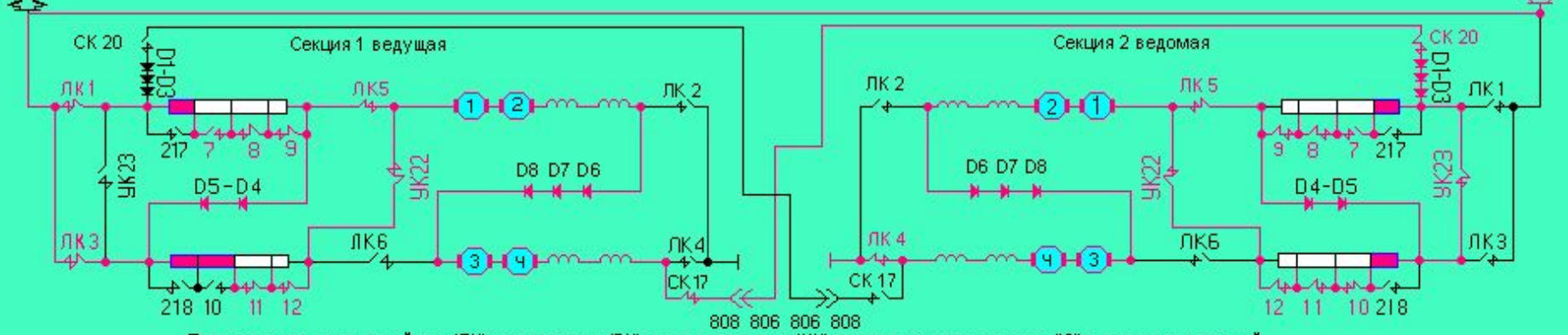


Порядок включения линейных (ЛК), реостатных (РК), уравнительных (УК) на сересном соединении "С" тяговых двигателей

Ведущая 1 секция

| № | Линейные (ЛК) | | | | | | Реостатные (РК) | | | | | | | | | | | УК | |
|---|---|---|---|---|---|---|---|---|---|---|---|---|---|---|---|---|---|---|---|
| Поз | 1 | 2 | 3 | 4 | 5 | 6 | 217 | 7 | 8 | 9 | 218 | 10 | 11 | 12 | 22 | 17 | 20 | 23 | 24 |
| 1 | ● | | | | | | | | | | | | | | ● | ● | | | |
| 2 | ● | | | | | | | | | | | | | | ● | ● | | | |
| 3 | ● | | | | | | | | | ● | | | | | ● | ● | | | |
| 4 | ● | | | | | | | | | ● | | | | | ● | ● | | | |
| 5 | ● | | | | | | | | ● | ● | | | | | ● | ● | | | |
| 6 | ● | | | | | | | | ● | ● | | | | | ● | ● | | | |
| 7 | ● | | ● | | | | | | | | | | | | ● | ● | | | |
| 8 | ● | | ● | | ● | | | | | | | | | | ● | ● | | | |
| 9 | ● | | ● | | ● | | | | | | | | | | ● | ● | | | |
| 10 | ● | | ● | | ● | | | | | | | | | | ● | ● | | | |
| 11 | ● | | ● | | ● | | | | | ● | | | | | ● | ● | | | |
| 12 | ● | | ● | | ● | | | | | ● | | | | | ● | ● | | | |
| 13 | ● | | ● | | ● | | | | | ● | | | | ● | ● | ● | | | |
| 14 | ● | | ● | | ● | | | | ● | ● | | | | ● | ● | ● | | | |
| 15 | ● | | ● | | ● | | | | ● | ● | | | | ● | ● | ● | | | |
| 16 | ● | | ● | | ● | | | | ● | ● | | | ● | ● | ● | ● | | | |
| 17 | ● | | ● | | ● | | | | ● | ● | | | ● | ● | ● | ● | | | |
| 18 | ● | | ● | | ● | | | ● | ● | ● | | | ● | ● | ● | ● | | | |
| 19 | ● | | ● | | ● | | | ● | ● | ● | | | ● | ● | ● | ● | | | |
| 20 | ● | | ● | | ● | | | ● | ● | ● | | ● | ● | ● | ● | ● | | | |
| 21 | ● | | ● | | ● | | | ● | ● | ● | | ● | ● | ● | ● | ● | | | |
| ХП | ● | | ● | | ● | | ● | ● | ● | ● | ● | ● | ● | ● | ● | ● | | | |

Ведомая 2 секция

| № | Линейные (ЛК) | | | | | | Реостатные (РК) | | | | | | | | | | | УК | |
|---|---|---|---|---|---|---|---|---|---|---|---|---|---|---|---|---|---|---|---|
| Поз | 1 | 2 | 3 | 4 | 5 | 6 | 217 | 7 | 8 | 9 | 218 | 10 | 11 | 12 | 22 | 17 | 20 | 23 | 24 |
| 1 | | | | ● | | | | | | | | | | | ● | | ● | | |
| 2 | | | | ● | | | | | | ● | | | | | ● | | ● | | |
| 3 | | | | ● | | | | | | ● | | | | | ● | | ● | | |
| 4 | | | | ● | | | | | ● | ● | | | | | ● | | ● | | |
| 5 | | | | ● | | | | | ● | ● | | | | | ● | | ● | | |
| 6 | | | | ● | | | | | ● | ● | | | | ● | ● | | ● | | |
| 7 | | | | ● | | | | | ● | ● | | | | ● | ● | | ● | | |
| 8 | | | | ● | | | | | ● | ● | | | | ● | ● | | ● | | |
| 9 | | | | ● | | | | | ● | ● | | | | ● | ● | | ● | ● | |
| 10 | | | | ● | ● | | | | | ● | | | | ● | ● | | ● | ● | |
| 11 | | | | ● | ● | | | | | ● | | | | ● | ● | | ● | ● | |
| 12 | | | | ● | ● | | | | ● | ● | | | | ● | ● | | ● | ● | |
| 13 | | | | ● | ● | | | | ● | ● | | | | ● | ● | | ● | ● | |
| 14 | | | | ● | ● | | | | ● | ● | | | | ● | ● | | ● | ● | |
| 15 | | | | ● | ● | | | | ● | ● | | | ● | ● | ● | | ● | ● | |
| 16 | | | | ● | ● | | | | ● | ● | | | ● | ● | ● | | ● | ● | |
| 17 | | | | ● | ● | | | ● | ● | ● | | | ● | ● | ● | | ● | ● | |
| 18 | | | | ● | ● | | | ● | ● | ● | | | ● | ● | ● | | ● | ● | |
| 19 | | | | ● | ● | | | ● | ● | ● | | ● | ● | ● | ● | | ● | ● | |
| 20 | | | | ● | ● | | | ● | ● | ● | | ● | ● | ● | ● | | ● | ● | |
| 21 | | | | ● | ● | | ● | ● | ● | ● | ● | ● | ● | ● | ● | | ● | ● | |
| ХП | | | | ● | ● | | ● | ● | ● | ● | ● | ● | ● | ● | ● | | ● | ● | |

Упрощенная схема работы электровоза на " С " соединении тяговых двигателей

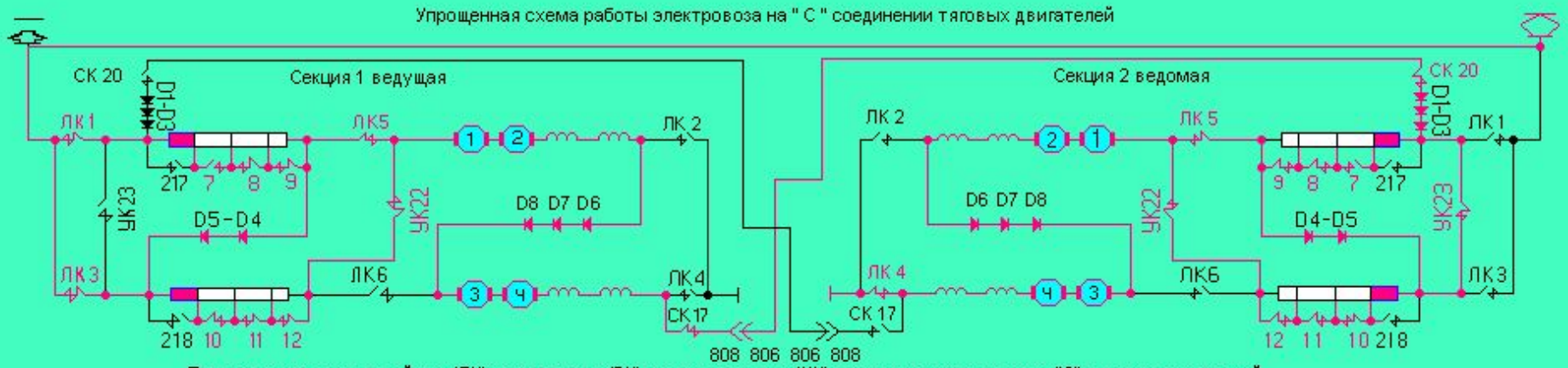


Порядок включения линейных (ЛК), реостатных (РК), уравнительных (УК) на сересном соединении "С" тяговых двигателей

Ведущая 1 секция

| № | Линейные (ЛК) | | | | | | Реостатные (РК) | | | | | | | | | | | УК | |
|---|---|---|---|---|---|---|---|---|---|---|---|---|---|---|---|---|---|---|---|
| Поз | 1 | 2 | 3 | 4 | 5 | 6 | 217 | 7 | 8 | 9 | 218 | 10 | 11 | 12 | 22 | 17 | 20 | 23 | 24 |
| 1 | ● | | | | | | | | | | | | | | ● | ● | | | |
| 2 | ● | | | | | | | | | | | | | | ● | ● | | | |
| 3 | ● | | | | | | | | | ● | | | | | ● | ● | | | |
| 4 | ● | | | | | | | | | ● | | | | | ● | ● | | | |
| 5 | ● | | | | | | | | ● | ● | | | | | ● | ● | | | |
| 6 | ● | | | | | | | | ● | ● | | | | | ● | ● | | | |
| 7 | ● | | ● | | | | | | | | | | | | ● | ● | | | |
| 8 | ● | | ● | | ● | | | | | | | | | | ● | ● | | | |
| 9 | ● | | ● | | ● | | | | | | | | | | ● | ● | | | |
| 10 | ● | | ● | | ● | | | | | | | | | | ● | ● | | | |
| 11 | ● | | ● | | ● | | | | | ● | | | | | ● | ● | | | |
| 12 | ● | | ● | | ● | | | | | ● | | | | | ● | ● | | | |
| 13 | ● | | ● | | ● | | | | | ● | | | | ● | ● | ● | | | |
| 14 | ● | | ● | | ● | | | | ● | ● | | | | ● | ● | ● | | | |
| 15 | ● | | ● | | ● | | | | ● | ● | | | | ● | ● | ● | | | |
| 16 | ● | | ● | | ● | | | | ● | ● | | | ● | ● | ● | ● | | | |
| 17 | ● | | ● | | ● | | | | ● | ● | | | ● | ● | ● | ● | | | |
| 18 | ● | | ● | | ● | | | ● | ● | ● | | | ● | ● | ● | ● | | | |
| 19 | ● | | ● | | ● | | | ● | ● | ● | | | ● | ● | ● | ● | | | |
| 20 | ● | | ● | | ● | | | ● | ● | ● | | ● | ● | ● | ● | ● | | | |
| 21 | ● | | ● | | ● | | | ● | ● | ● | | ● | ● | ● | ● | ● | | | |
| ХП | ● | | ● | | ● | | ● | ● | ● | ● | ● | ● | ● | ● | ● | ● | | | |

Ведомая 2 секция

| № | Линейные (ЛК) | | | | | | Реостатные (РК) | | | | | | | | | | | УК | |
|---|---|---|---|---|---|---|---|---|---|---|---|---|---|---|---|---|---|---|---|
| Поз | 1 | 2 | 3 | 4 | 5 | 6 | 217 | 7 | 8 | 9 | 218 | 10 | 11 | 12 | 22 | 17 | 20 | 23 | 24 |
| 1 | | | | ● | | | | | | | | | | | ● | | ● | | |
| 2 | | | | ● | | | | | | ● | | | | | ● | | ● | | |
| 3 | | | | ● | | | | | | ● | | | | | ● | | ● | | |
| 4 | | | | ● | | | | | ● | ● | | | | | ● | | ● | | |
| 5 | | | | ● | | | | | ● | ● | | | | | ● | | ● | | |
| 6 | | | | ● | | | | | ● | ● | | | | ● | ● | | ● | | |
| 7 | | | | ● | | | | | ● | ● | | | | ● | ● | | ● | | |
| 8 | | | | ● | | | | | ● | ● | | | | ● | ● | | ● | | |
| 9 | | | | ● | | | | | ● | ● | | | | ● | ● | | ● | ● | |
| 10 | | | | ● | ● | | | | | ● | | | | ● | ● | | ● | ● | |
| 11 | | | | ● | ● | | | | | ● | | | | ● | ● | | ● | ● | |
| 12 | | | | ● | ● | | | | ● | ● | | | | ● | ● | | ● | ● | |
| 13 | | | | ● | ● | | | | ● | ● | | | | ● | ● | | ● | ● | |
| 14 | | | | ● | ● | | | | ● | ● | | | | ● | ● | | ● | ● | |
| 15 | | | | ● | ● | | | | ● | ● | | | ● | ● | ● | | ● | ● | |
| 16 | | | | ● | ● | | | | ● | ● | | | ● | ● | ● | | ● | ● | |
| 17 | | | | ● | ● | | | ● | ● | ● | | | ● | ● | ● | | ● | ● | |
| 18 | | | | ● | ● | | | ● | ● | ● | | | ● | ● | ● | | ● | ● | |
| 19 | | | | ● | ● | | | ● | ● | ● | | ● | ● | ● | ● | | ● | ● | |
| 20 | | | | ● | ● | | | ● | ● | ● | | ● | ● | ● | ● | | ● | ● | |
| 21 | | | | ● | ● | | ● | ● | ● | ● | ● | ● | ● | ● | ● | | ● | ● | |
| ХП | | | | ● | ● | | ● | ● | ● | ● | ● | ● | ● | ● | ● | | ● | ● | |

Упрощенная схема работы электровоза на " С " соединении тяговых двигателей

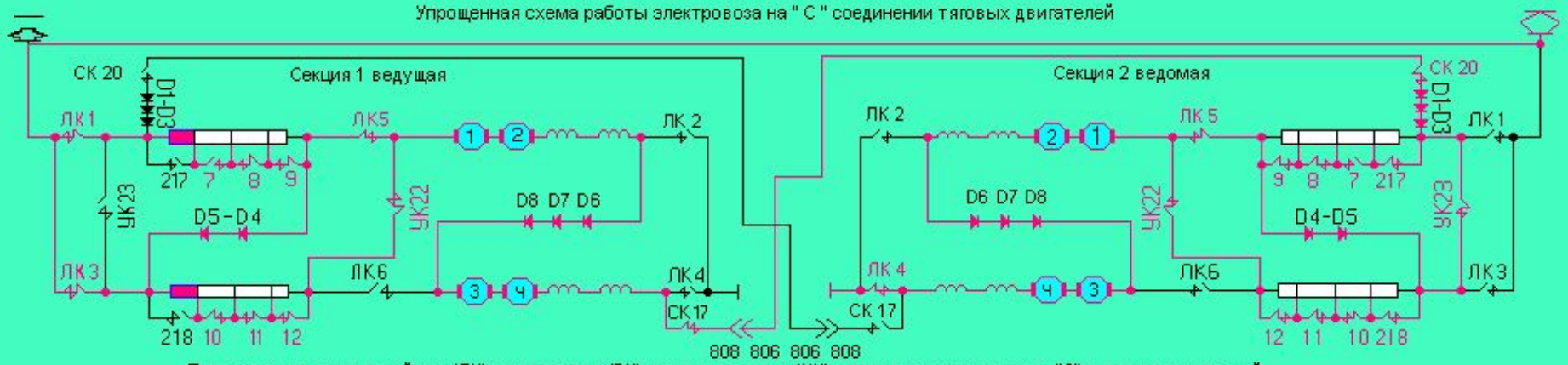


Порядок включения линейных (ЛК), реостатных (РК), уравнительных (УК) на сересном соединении "С" тяговых двигателей

Ведущая 1 секция

| № Поз | Линейные (ЛК) 1 | 2 | 3 | 4 | 5 | 6 | Реостатные (РК) 217 | 7 | 8 | 9 | 218 | 10 | 11 | 12 | 22 | 17 | 20 | УК 23 | 24 |
|---|---|---|---|---|---|---|---|---|---|---|---|---|---|---|---|---|---|---|---|
| 1 | ● | | | | | | | | | | | | | | ● | ● | | | |
| 2 | ● | | | | | | | | | | | | | | ● | ● | | | |
| 3 | ● | | | | | | | | | ● | | | | | ● | ● | | | |
| 4 | ● | | | | | | | | | ● | | | | | ● | ● | | | |
| 5 | ● | | | | | | | | ● | ● | | | | | ● | ● | | | |
| 6 | ● | | | | | | | | ● | ● | | | | | ● | ● | | | |
| 7 | ● | | ● | | | | | | | | | | | | ● | ● | | | |
| 8 | ● | | ● | | ● | | | | | | | | | | ● | ● | | | |
| 9 | ● | | ● | | ● | | | | | | | | | | ● | ● | | | |
| 10 | ● | | ● | | ● | | | | | | | | | | ● | ● | | | |
| 11 | ● | | ● | | ● | | | | | ● | | | | | ● | ● | | | |
| 12 | ● | | ● | | ● | | | | | ● | | | | | ● | ● | | | |
| 13 | ● | | ● | | ● | | | | | ● | | | | ● | ● | ● | | | |
| 14 | ● | | ● | | ● | | | | ● | ● | | | | ● | ● | ● | | | |
| 15 | ● | | ● | | ● | | | | ● | ● | | | | ● | ● | ● | | | |
| 16 | ● | | ● | | ● | | | | ● | ● | | | ● | ● | ● | ● | | | |
| 17 | ● | | ● | | ● | | | | ● | ● | | | ● | ● | ● | ● | | | |
| 18 | ● | | ● | | ● | | | ● | ● | ● | | | ● | ● | ● | ● | | | |
| 19 | ● | | ● | | ● | | | ● | ● | ● | | | ● | ● | ● | ● | | | |
| 20 | ● | | ● | | ● | | | ● | ● | ● | | ● | ● | ● | ● | ● | | | |
| 21 | ● | | ● | | ● | | | ● | ● | ● | | ● | ● | ● | ● | ● | | | |
| ХП | ● | | ● | | ● | | ● | ● | ● | ● | ● | ● | ● | ● | ● | ● | | | |

Ведомая 2 секция

| № Поз | Линейные (ЛК) 1 | 2 | 3 | 4 | 5 | 6 | Реостатные (РК) 217 | 7 | 8 | 9 | 218 | 10 | 11 | 12 | 22 | 17 | 20 | УК 23 | 24 |
|---|---|---|---|---|---|---|---|---|---|---|---|---|---|---|---|---|---|---|---|
| 1 | | | | ● | | | | | | | | | | | ● | | ● | | |
| 2 | | | | ● | | | | | | ● | | | | | ● | | ● | | |
| 3 | | | | ● | | | | | | ● | | | | | ● | | ● | | |
| 4 | | | | ● | | | | | ● | ● | | | | | ● | | ● | | |
| 5 | | | | ● | | | | | ● | ● | | | | | ● | | ● | | |
| 6 | | | | ● | | | | | ● | ● | | | | ● | ● | | ● | | |
| 7 | | | | ● | | | | | ● | ● | | | | ● | ● | | ● | | |
| 8 | | | | ● | | | | | ● | ● | | | | ● | ● | | ● | | |
| 9 | | | | ● | | | | | ● | ● | | | | ● | ● | | ● | ● | |
| 10 | | | | ● | ● | | | | | ● | | | | ● | ● | | ● | ● | |
| 11 | | | | ● | ● | | | | | ● | | | | ● | ● | | ● | ● | |
| 12 | | | | ● | ● | | | | ● | ● | | | | ● | ● | | ● | ● | |
| 13 | | | | ● | ● | | | | ● | ● | | | | ● | ● | | ● | ● | |
| 14 | | | | ● | ● | | | | ● | ● | | | | ● | ● | | ● | ● | |
| 15 | | | | ● | ● | | | | ● | ● | | | ● | ● | ● | | ● | ● | |
| 16 | | | | ● | ● | | | | ● | ● | | | ● | ● | ● | | ● | ● | |
| 17 | | | | ● | ● | | | ● | ● | ● | | | ● | ● | ● | | ● | ● | |
| 18 | | | | ● | ● | | | ● | ● | ● | | | ● | ● | ● | | ● | ● | |
| 19 | | | | ● | ● | | | ● | ● | ● | | ● | ● | ● | ● | | ● | ● | |
| 20 | | | | ● | ● | | | ● | ● | ● | | ● | ● | ● | ● | | ● | ● | |
| 21 | | | | ● | ● | | ● | ● | ● | ● | ● | ● | ● | ● | ● | | ● | ● | |
| ХП | | | | ● | ● | | ● | ● | ● | ● | ● | ● | ● | ● | ● | | ● | ● | |

Упрощенная схема работы электровоза на " С " соединении тяговых двигателей

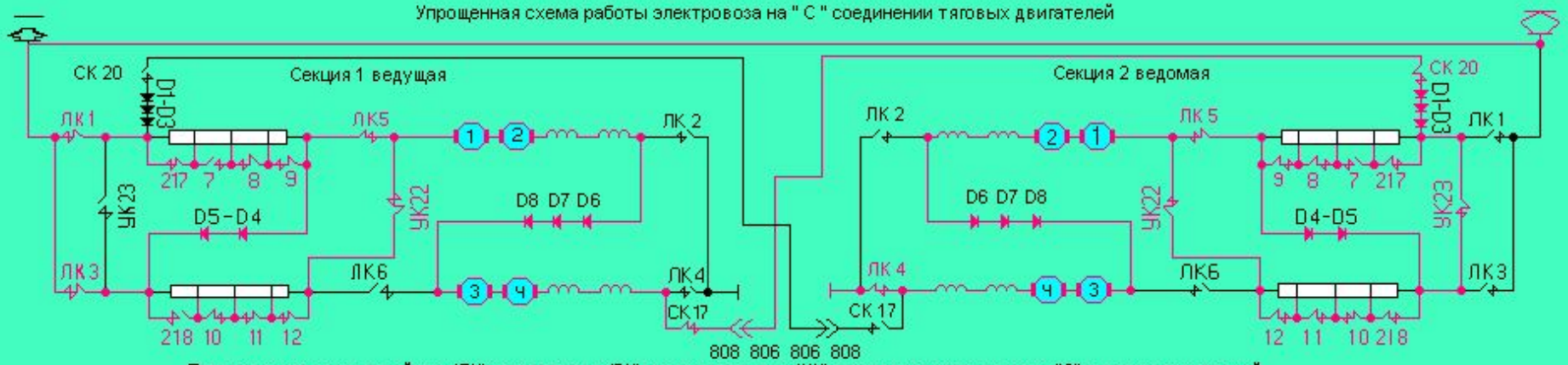


Порядок включения линейных (ЛК), реостатных (РК), уравнительных (УК) на сересном соединении "С" тяговых двигателей

Ведущая 1 секция

| № Поз | Линейные (ЛК) | | | | | | Реостатные (РК) | | | | | | | | | | | УК | |
|---|---|---|---|---|---|---|---|---|---|---|---|---|---|---|---|---|---|---|---|
| | 1 | 2 | 3 | 4 | 5 | 6 | 217 | 7 | 8 | 9 | 218 | 10 | 11 | 12 | 22 | 17 | 20 | 23 | 24 |
| 1 | ● | | | | | | | | | | | | | | ● | ● | | | |
| 2 | ● | | | | | | | | | | | | | | ● | ● | | | |
| 3 | ● | | | | | | | | | ● | | | | | ● | ● | | | |
| 4 | ● | | | | | | | | | ● | | | | | ● | ● | | | |
| 5 | ● | | | | | | | | ● | ● | | | | | ● | ● | | | |
| 6 | ● | | | | | | | | ● | ● | | | | | ● | ● | | | |
| 7 | ● | | ● | | | | | | | | | | | | ● | ● | | | |
| 8 | ● | | ● | | ● | | | | | | | | | | ● | ● | | | |
| 9 | ● | | ● | | ● | | | | | | | | | | ● | ● | | | |
| 10 | ● | | ● | | ● | | | | | | | | | | ● | ● | | | |
| 11 | ● | | ● | | ● | | | | | ● | | | | | ● | ● | | | |
| 12 | ● | | ● | | ● | | | | | ● | | | | | ● | ● | | | |
| 13 | ● | | ● | | ● | | | | | ● | | | | ● | ● | ● | | | |
| 14 | ● | | ● | | ● | | | | ● | ● | | | | ● | ● | ● | | | |
| 15 | ● | | ● | | ● | | | | ● | ● | | | | ● | ● | ● | | | |
| 16 | ● | | ● | | ● | | | | ● | ● | | | ● | ● | ● | ● | | | |
| 17 | ● | | ● | | ● | | | | ● | ● | | | ● | ● | ● | ● | | | |
| 18 | ● | | ● | | ● | | | ● | ● | ● | | | ● | ● | ● | ● | | | |
| 19 | ● | | ● | | ● | | | ● | ● | ● | | | ● | ● | ● | ● | | | |
| 20 | ● | | ● | | ● | | | ● | ● | ● | | ● | ● | ● | ● | ● | | | |
| 21 | ● | | ● | | ● | | | ● | ● | ● | | ● | ● | ● | ● | ● | | | |
| ХП | ● | | ● | | ● | | ● | ● | ● | ● | ● | ● | ● | ● | ● | ● | | | |

Ведомая 2 секция

| № Поз | Линейные (ЛК) | | | | | | Реостатные (РК) | | | | | | | | | | | УК | |
|---|---|---|---|---|---|---|---|---|---|---|---|---|---|---|---|---|---|---|---|
| | 1 | 2 | 3 | 4 | 5 | 6 | 217 | 7 | 8 | 9 | 218 | 10 | 11 | 12 | 22 | 17 | 20 | 23 | 24 |
| 1 | | | | ● | | | | | | | | | | | ● | | ● | | |
| 2 | | | | ● | | | | | | ● | | | | | ● | | ● | | |
| 3 | | | | ● | | | | | | ● | | | | | ● | | ● | | |
| 4 | | | | ● | | | | | ● | ● | | | | | ● | | ● | | |
| 5 | | | | ● | | | | | ● | ● | | | | | ● | | ● | | |
| 6 | | | | ● | | | | | ● | ● | | | | ● | ● | | ● | | |
| 7 | | | | ● | | | | | ● | ● | | | | ● | ● | | ● | | |
| 8 | | | | ● | | | | | ● | ● | | | | ● | ● | | ● | | |
| 9 | | | | ● | | | | | ● | ● | | | | ● | ● | | ● | ● | |
| 10 | | | | ● | ● | | | | | ● | | | | ● | ● | | ● | ● | |
| 11 | | | | ● | ● | | | | | ● | | | | ● | ● | | ● | ● | |
| 12 | | | | ● | ● | | | | ● | ● | | | | ● | ● | | ● | ● | |
| 13 | | | | ● | ● | | | | ● | ● | | | | ● | ● | | ● | ● | |
| 14 | | | | ● | ● | | | | ● | ● | | | | ● | ● | | ● | ● | |
| 15 | | | | ● | ● | | | | ● | ● | | | ● | ● | ● | | ● | ● | |
| 16 | | | | ● | ● | | | | ● | ● | | | ● | ● | ● | | ● | ● | |
| 17 | | | | ● | ● | | | ● | ● | ● | | | ● | ● | ● | | ● | ● | |
| 18 | | | | ● | ● | | | ● | ● | ● | | | ● | ● | ● | | ● | ● | |
| 19 | | | | ● | ● | | | ● | ● | ● | | ● | ● | ● | ● | | ● | ● | |
| 20 | | | | ● | ● | | | ● | ● | ● | | ● | ● | ● | ● | | ● | ● | |
| 21 | | | | ● | ● | | ● | ● | ● | ● | ● | ● | ● | ● | ● | | ● | ● | |
| ХП | | | | ● | ● | | ● | ● | ● | ● | ● | ● | ● | ● | ● | | ● | ● | |

Упрощенная схема работы электровоза на " СП " соединении тяговых двигателей

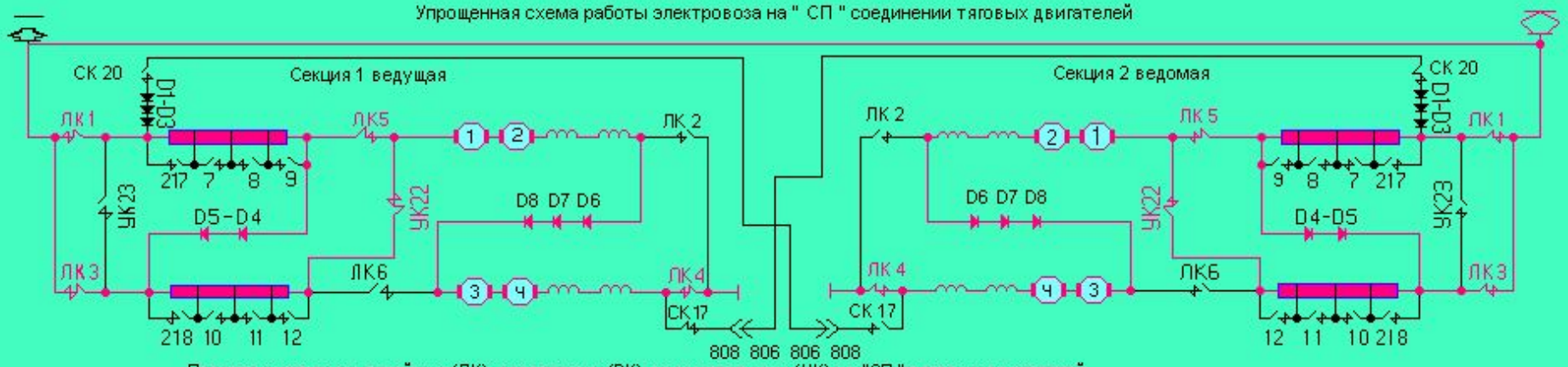


Порядок включения линейных (ЛК), реостатных (РК), уравнительных (УК) на "СП " тяговых двигателей

| № Поз | Линейные (ЛК) | | | | | | Реостатные (РК) | | | | | | | | | | | УК | |
|---|---|---|---|---|---|---|---|---|---|---|---|---|---|---|---|---|---|---|---|
| "СП" соединение | 1 | 2 | 3 | 4 | 5 | 6 | 217 | 7 | 8 | 9 | 218 | 10 | 11 | 12 | 22 | 17 | 20 | 23 | 24 |
| 1 | ● | | ● | ● | ● | | | | | | | | | | ● | | | | |
| 2 | ● | | ● | ● | ● | | | | | ● | | | | | ● | | | | |
| 3 | ● | | ● | ● | ● | | | | | ● | | | ● | | ● | | | | |
| 4 | ● | | ● | ● | ● | | | ● | | ● | | | ● | | ● | | | | |
| 5 | ● | | ● | ● | ● | | ● | ● | | ● | | | ● | | ● | | | | |
| 6 | ● | | ● | ● | ● | | ● | ● | | ● | | ● | ● | | ● | | | | |
| 7 | ● | | ● | ● | ● | | ● | ● | | ● | | | | ● | ● | | | | |
| 8 | ● | | ● | ● | ● | | ● | ● | | ● | | ● | | ● | ● | | | | |
| 9 | ● | | ● | ● | ● | | ● | ● | | ● | ● | ● | | ● | ● | | | | |
| 10 | ● | | ● | ● | ● | | | | ● | ● | | | | ● | ● | | | | |
| 11 | ● | | ● | ● | ● | | | | ● | ● | ● | ● | | ● | ● | | | | |
| 12 | ● | | ● | ● | ● | | ● | | ● | ● | ● | ● | | ● | ● | | | | |
| 13 | ● | | ● | ● | ● | | | | ● | ● | | | ● | ● | ● | | | | |
| 14 | ● | | ● | ● | ● | | | ● | ● | ● | | | ● | ● | ● | | | | |
| 15 | ● | | ● | ● | ● | | | ● | ● | ● | | ● | ● | ● | ● | | | | |
| ХП | ● | | ● | ● | ● | | ● | ● | ● | ● | ● | ● | ● | ● | ● | | | | |

Упрощенная схема работы электровоза на " СП " соединении тяговых двигателей

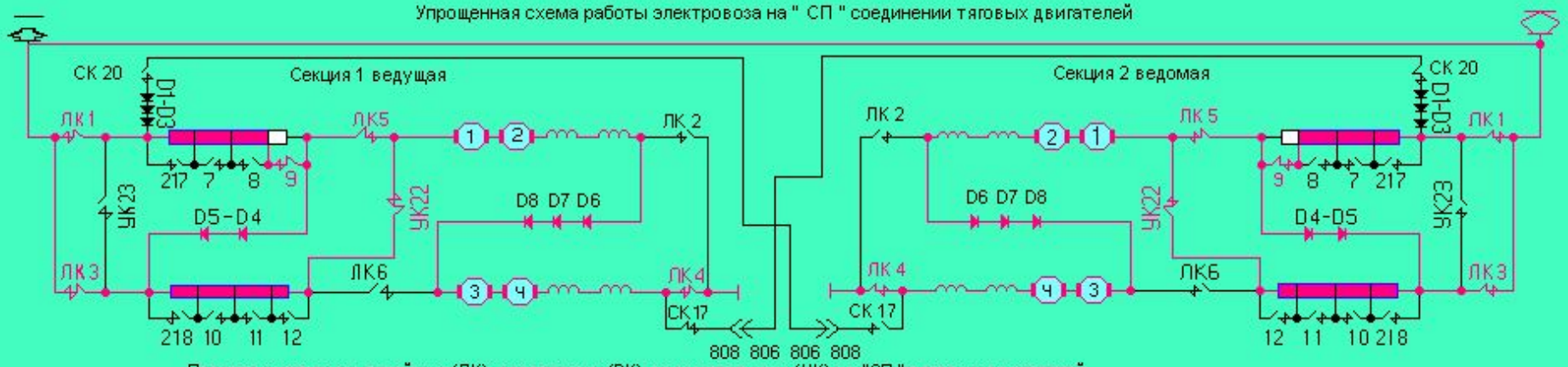


Порядок включения линейных (ЛК), реостатных (РК), уравнительных (УК) на "СП " тяговых двигателей

| № Поз | Линейные (ЛК) | | | | | | Реостатные (РК) | | | | | | | | | | | УК | |
|---|---|---|---|---|---|---|---|---|---|---|---|---|---|---|---|---|---|---|---|
| "СП" соединение | 1 | 2 | 3 | 4 | 5 | 6 | 217 | 7 | 8 | 9 | 218 | 10 | 11 | 12 | 22 | 17 | 20 | 23 | 24 |
| 1 | ● | | ● | ● | ● | | | | | | | | | | ● | | | | |
| 2 | ● | | ● | ● | ● | | | | | ● | | | | | ● | | | | |
| 3 | ● | | ● | ● | ● | | | | | ● | | | ● | | ● | | | | |
| 4 | ● | | ● | ● | ● | | | ● | | ● | | | ● | | ● | | | | |
| 5 | ● | | ● | ● | ● | | ● | ● | | ● | | | ● | | ● | | | | |
| 6 | ● | | ● | ● | ● | | ● | ● | | ● | | ● | ● | | ● | | | | |
| 7 | ● | | ● | ● | ● | | ● | ● | | ● | | | | ● | ● | | | | |
| 8 | ● | | ● | ● | ● | | ● | ● | | ● | | ● | | ● | ● | | | | |
| 9 | ● | | ● | ● | ● | | ● | ● | | ● | ● | ● | | ● | ● | | | | |
| 10 | ● | | ● | ● | ● | | | | ● | ● | | | | ● | ● | | | | |
| 11 | ● | | ● | ● | ● | | | | ● | ● | ● | ● | | ● | ● | | | | |
| 12 | ● | | ● | ● | ● | | ● | | ● | ● | ● | ● | | ● | ● | | | | |
| 13 | ● | | ● | ● | ● | | | | ● | ● | | | ● | ● | ● | | | | |
| 14 | ● | | ● | ● | ● | | | ● | ● | ● | | | ● | ● | ● | | | | |
| 15 | ● | | ● | ● | ● | | | ● | ● | ● | | ● | ● | ● | ● | | | | |
| ХП | ● | | ● | ● | ● | | ● | ● | ● | ● | ● | ● | ● | ● | ● | | | | |

Упрощенная схема работы электровоза на " СП " соединении тяговых двигателей

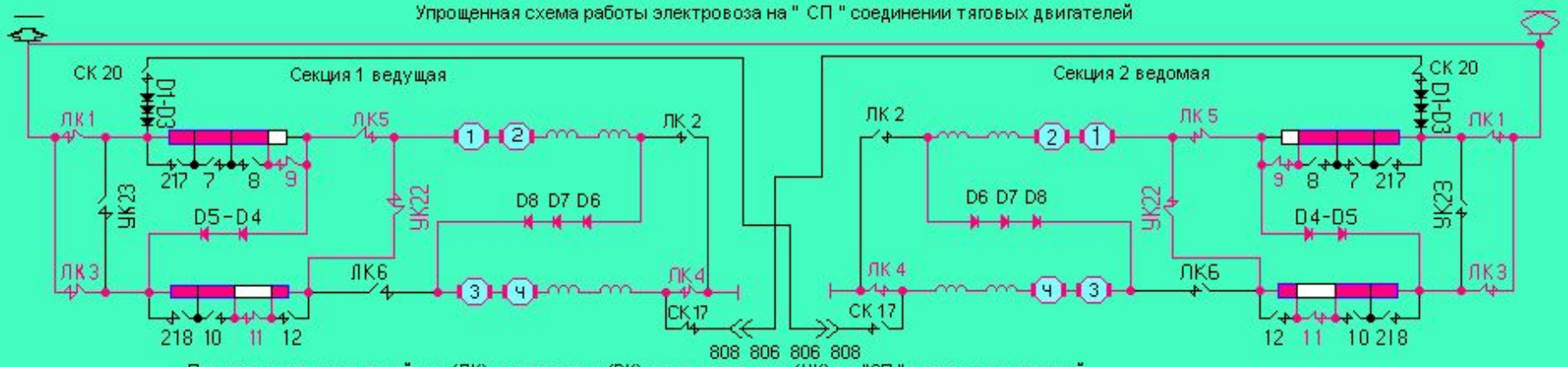


Порядок включения линейных (ЛК), реостатных (РК), уравнительных (УК) на "СП " тяговых двигателей

| № Поз | Линейные (ЛК) | | | | | | Реостатные (РК) | | | | | | | | | | | УК | |
|---|---|---|---|---|---|---|---|---|---|---|---|---|---|---|---|---|---|---|---|
| "СП" соединение | 1 | 2 | 3 | 4 | 5 | 6 | 217 | 7 | 8 | 9 | 218 | 10 | 11 | 12 | 22 | 17 | 20 | 23 | 24 |
| 1 | ● | | ● | ● | ● | | | | | | | | | | ● | | | | |
| 2 | ● | | ● | ● | ● | | | | | ● | | | | | ● | | | | |
| 3 | ● | | ● | ● | ● | | | | | ● | | | ● | | ● | | | | |
| 4 | ● | | ● | ● | ● | | | ● | | ● | | | ● | | ● | | | | |
| 5 | ● | | ● | ● | ● | | ● | ● | | ● | | | ● | | ● | | | | |
| 6 | ● | | ● | ● | ● | | ● | ● | | ● | | ● | ● | | ● | | | | |
| 7 | ● | | ● | ● | ● | | ● | ● | | ● | | | | ● | ● | | | | |
| 8 | ● | | ● | ● | ● | | ● | ● | | ● | | ● | | ● | ● | | | | |
| 9 | ● | | ● | ● | ● | | ● | ● | | ● | ● | ● | | ● | ● | | | | |
| 10 | ● | | ● | ● | ● | | | | ● | ● | | | | ● | ● | | | | |
| 11 | ● | | ● | ● | ● | | | | ● | ● | ● | ● | | ● | ● | | | | |
| 12 | ● | | ● | ● | ● | | ● | | ● | ● | ● | ● | | ● | ● | | | | |
| 13 | ● | | ● | ● | ● | | | | ● | ● | | | ● | ● | ● | | | | |
| 14 | ● | | ● | ● | ● | | | ● | ● | ● | | | ● | ● | ● | | | | |
| 15 | ● | | ● | ● | ● | | | ● | ● | ● | | ● | ● | ● | ● | | | | |
| ХП | ● | | ● | ● | ● | | ● | ● | ● | ● | ● | ● | ● | ● | ● | | | | |

Упрощенная схема работы электровоза на " СП " соединении тяговых двигателей

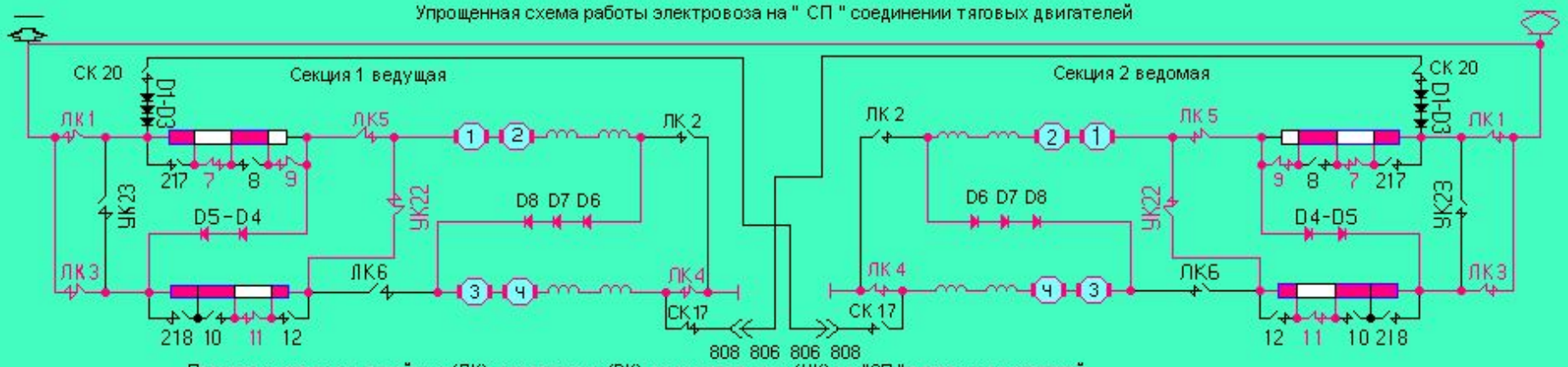


Порядок включения линейных (ЛК), реостатных (РК), уравнительных (УК) на "СП " тяговых двигателей

| № Поз | Линейные (ЛК) | | | | | | Реостатные (РК) | | | | | | | | | | | УК | |
|---|---|---|---|---|---|---|---|---|---|---|---|---|---|---|---|---|---|---|---|
| "СП" соединение | 1 | 2 | 3 | 4 | 5 | 6 | 217 | 7 | 8 | 9 | 218 | 10 | 11 | 12 | 22 | 17 | 20 | 23 | 24 |
| 1 | ● | | ● | ● | ● | | | | | | | | | | ● | | | | |
| 2 | ● | | ● | ● | ● | | | | | ● | | | | | ● | | | | |
| 3 | ● | | ● | ● | ● | | | | | ● | | | ● | | ● | | | | |
| 4 | ● | | ● | ● | ● | | | ● | | ● | | | ● | | ● | | | | |
| 5 | ● | | ● | ● | ● | | ● | ● | | ● | | | ● | | ● | | | | |
| 6 | ● | | ● | ● | ● | | ● | ● | | ● | | ● | ● | | ● | | | | |
| 7 | ● | | ● | ● | ● | | ● | ● | | ● | | | | ● | ● | | | | |
| 8 | ● | | ● | ● | ● | | ● | ● | | ● | | ● | | ● | ● | | | | |
| 9 | ● | | ● | ● | ● | | ● | ● | | ● | ● | ● | | ● | ● | | | | |
| 10 | ● | | ● | ● | ● | | | | ● | ● | | | | ● | ● | | | | |
| 11 | ● | | ● | ● | ● | | | | ● | ● | ● | ● | | ● | ● | | | | |
| 12 | ● | | ● | ● | ● | | ● | | ● | ● | ● | ● | | ● | ● | | | | |
| 13 | ● | | ● | ● | ● | | | | ● | ● | | | ● | ● | ● | | | | |
| 14 | ● | | ● | ● | ● | | | ● | ● | ● | | | ● | ● | ● | | | | |
| 15 | ● | | ● | ● | ● | | | ● | ● | ● | | ● | ● | ● | ● | | | | |
| ХП | ● | | ● | ● | ● | | ● | ● | ● | ● | ● | ● | ● | ● | ● | | | | |

Упрощенная схема работы электровоза на " СП " соединении тяговых двигателей

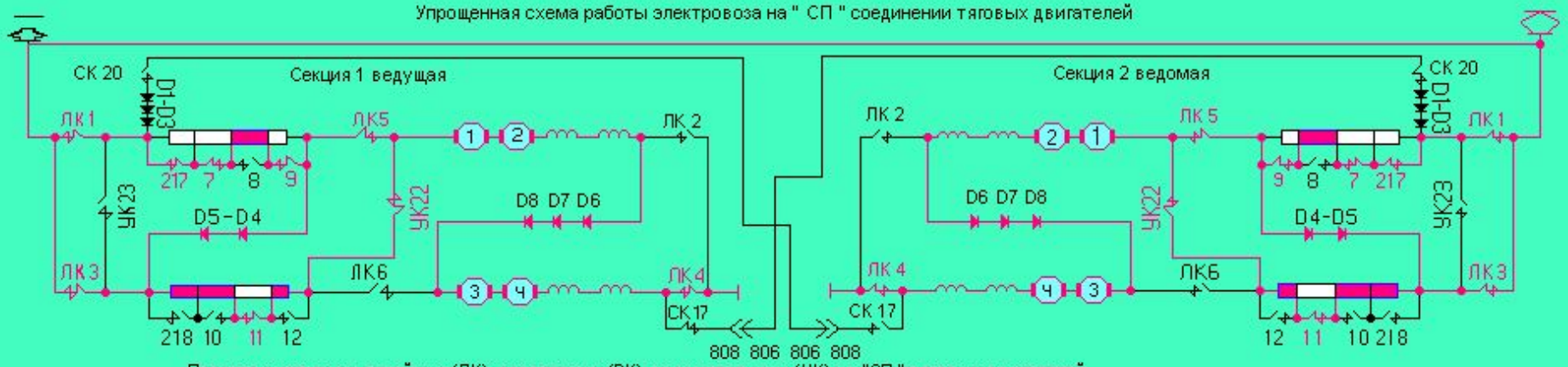


Порядок включения линейных (ЛК), реостатных (РК), уравнительных (УК) на "СП " тяговых двигателей

| № Поз | Линейные (ЛК) | | | | | | Реостатные (РК) | | | | | | | | | | | УК | |
|---|---|---|---|---|---|---|---|---|---|---|---|---|---|---|---|---|---|---|---|
| "СП" соединение | 1 | 2 | 3 | 4 | 5 | 6 | 217 | 7 | 8 | 9 | 218 | 10 | 11 | 12 | 22 | 17 | 20 | 23 | 24 |
| 1 | ● | | ● | ● | ● | | | | | | | | | | ● | | | | |
| 2 | ● | | ● | ● | ● | | | | | ● | | | | | ● | | | | |
| 3 | ● | | ● | ● | ● | | | | | ● | | | ● | | ● | | | | |
| 4 | ● | | ● | ● | ● | | | ● | | ● | | | ● | | ● | | | | |
| 5 | ● | | ● | ● | ● | | ● | ● | | ● | | | ● | | ● | | | | |
| 6 | ● | | ● | ● | ● | | ● | ● | | ● | | ● | ● | | ● | | | | |
| 7 | ● | | ● | ● | ● | | ● | ● | | ● | | | | ● | ● | | | | |
| 8 | ● | | ● | ● | ● | | ● | ● | | ● | | ● | | ● | ● | | | | |
| 9 | ● | | ● | ● | ● | | ● | ● | | ● | ● | ● | | ● | ● | | | | |
| 10 | ● | | ● | ● | ● | | | | ● | ● | | | | ● | ● | | | | |
| 11 | ● | | ● | ● | ● | | | | ● | ● | ● | ● | | ● | ● | | | | |
| 12 | ● | | ● | ● | ● | | ● | | ● | ● | ● | ● | | ● | ● | | | | |
| 13 | ● | | ● | ● | ● | | | | ● | ● | | | ● | ● | ● | | | | |
| 14 | ● | | ● | ● | ● | | | ● | ● | ● | | | ● | ● | ● | | | | |
| 15 | ● | | ● | ● | ● | | | ● | ● | ● | | ● | ● | ● | ● | | | | |
| ХП | ● | | ● | ● | ● | | ● | ● | ● | ● | ● | ● | ● | ● | ● | | | | |

Упрощенная схема работы электровоза на " СП " соединении тяговых двигателей

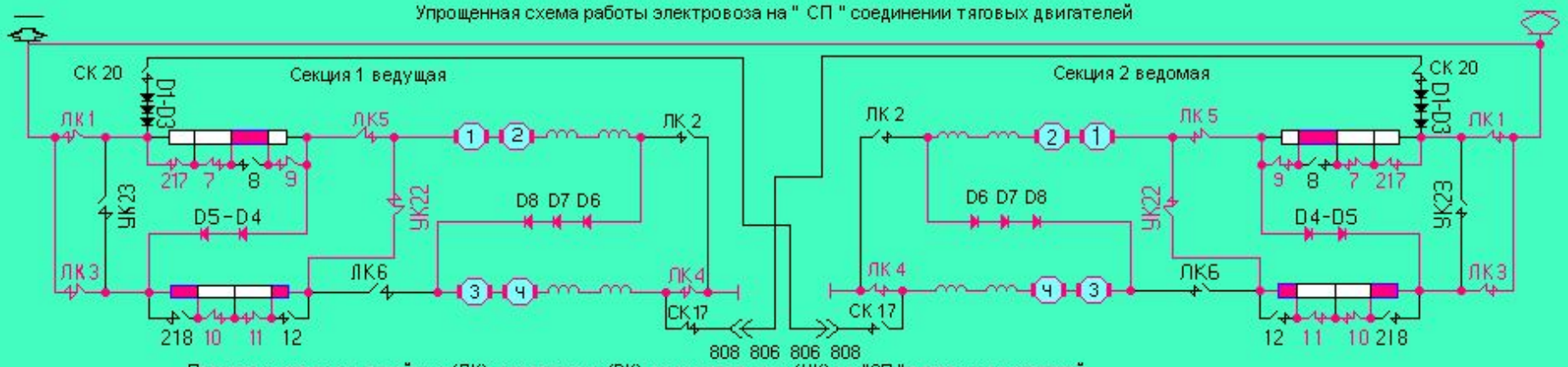


Порядок включения линейных (ЛК), реостатных (РК), уравнительных (УК) на "СП " тяговых двигателей

| № Поз | Линейные (ЛК) | | | | | | Реостатные (РК) | | | | | | | | | | | УК | |
|---|---|---|---|---|---|---|---|---|---|---|---|---|---|---|---|---|---|---|---|
| "СП" соединение | 1 | 2 | 3 | 4 | 5 | 6 | 217 | 7 | 8 | 9 | 218 | 10 | 11 | 12 | 22 | 17 | 20 | 23 | 24 |
| 1 | ● | | ● | ● | ● | | | | | | | | | | ● | | | | |
| 2 | ● | | ● | ● | ● | | | | | ● | | | | | ● | | | | |
| 3 | ● | | ● | ● | ● | | | | | ● | | | ● | | ● | | | | |
| 4 | ● | | ● | ● | ● | | | ● | | ● | | | ● | | ● | | | | |
| 5 | ● | | ● | ● | ● | | ● | ● | | ● | | | ● | | ● | | | | |
| 6 | ● | | ● | ● | ● | | ● | ● | | ● | | ● | ● | | ● | | | | |
| 7 | ● | | ● | ● | ● | | ● | ● | | ● | | | | ● | ● | | | | |
| 8 | ● | | ● | ● | ● | | ● | ● | | ● | | ● | | ● | ● | | | | |
| 9 | ● | | ● | ● | ● | | ● | ● | | ● | ● | ● | | ● | ● | | | | |
| 10 | ● | | ● | ● | ● | | | | ● | ● | | | | ● | ● | | | | |
| 11 | ● | | ● | ● | ● | | | | ● | ● | ● | ● | | ● | ● | | | | |
| 12 | ● | | ● | ● | ● | | ● | | ● | ● | ● | ● | | ● | ● | | | | |
| 13 | ● | | ● | ● | ● | | | | ● | ● | | | ● | ● | ● | | | | |
| 14 | ● | | ● | ● | ● | | | ● | ● | ● | | | ● | ● | ● | | | | |
| 15 | ● | | ● | ● | ● | | | ● | ● | ● | | ● | ● | ● | ● | | | | |
| ХП | ● | | ● | ● | ● | | ● | ● | ● | ● | ● | ● | ● | ● | ● | | | | |

Упрощенная схема работы электровоза на " СП " соединении тяговых двигателей

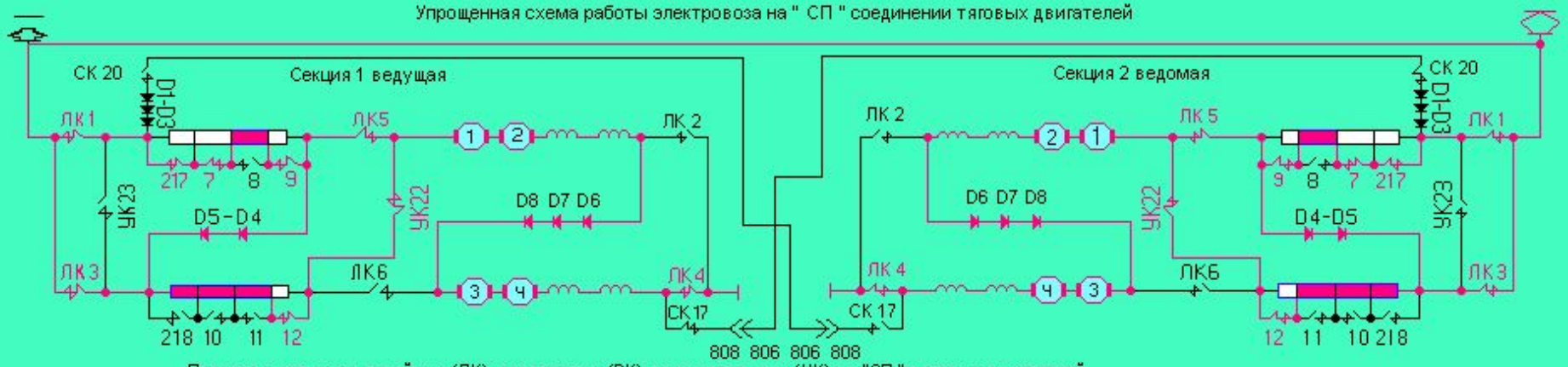


Порядок включения линейных (ЛК), реостатных (РК), уравнительных (УК) на "СП " тяговых двигателей

| № Поз | Линейные (ЛК) | | | | | | Реостатные (РК) | | | | | | | | | | | УК | |
|---|---|---|---|---|---|---|---|---|---|---|---|---|---|---|---|---|---|---|---|
| "СП" соединение | 1 | 2 | 3 | 4 | 5 | 6 | 217 | 7 | 8 | 9 | 218 | 10 | 11 | 12 | 22 | 17 | 20 | 23 | 24 |
| 1 | ● | | ● | ● | ● | | | | | | | | | | ● | | | | |
| 2 | ● | | ● | ● | ● | | | | | ● | | | | | ● | | | | |
| 3 | ● | | ● | ● | ● | | | | | ● | | | ● | | ● | | | | |
| 4 | ● | | ● | ● | ● | | | ● | | ● | | | ● | | ● | | | | |
| 5 | ● | | ● | ● | ● | | ● | ● | | ● | | | ● | | ● | | | | |
| 6 | ● | | ● | ● | ● | | ● | ● | | ● | | ● | ● | | ● | | | | |
| 7 | ● | | ● | ● | ● | | ● | ● | | ● | | | | ● | ● | | | | |
| 8 | ● | | ● | ● | ● | | ● | ● | | ● | | ● | | ● | ● | | | | |
| 9 | ● | | ● | ● | ● | | ● | ● | | ● | ● | ● | | ● | ● | | | | |
| 10 | ● | | ● | ● | ● | | | | ● | ● | | | | ● | ● | | | | |
| 11 | ● | | ● | ● | ● | | | | ● | ● | ● | ● | | ● | ● | | | | |
| 12 | ● | | ● | ● | ● | | ● | | ● | ● | ● | ● | | ● | ● | | | | |
| 13 | ● | | ● | ● | ● | | | | ● | ● | | | ● | ● | ● | | | | |
| 14 | ● | | ● | ● | ● | | | ● | ● | ● | | | ● | ● | ● | | | | |
| 15 | ● | | ● | ● | ● | | | ● | ● | ● | | ● | ● | ● | ● | | | | |
| ХП | ● | | ● | ● | ● | | ● | ● | ● | ● | ● | ● | ● | ● | ● | | | | |

Упрощенная схема работы электровоза на " СП " соединении тяговых двигателей

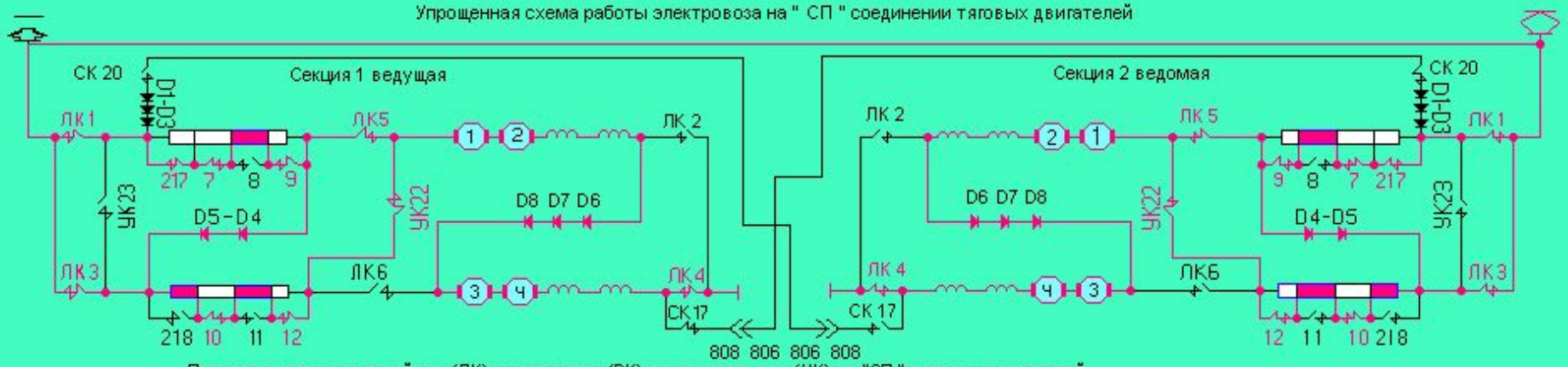


Порядок включения линейных (ЛК), реостатных (РК), уравнительных (УК) на "СП " тяговых двигателей

"СП" соединение

| № | Линейные (ЛК) | | | | | | Реостатные (РК) | | | | | | | | | | | УК | |
|---|---|---|---|---|---|---|---|---|---|---|---|---|---|---|---|---|---|---|---|
| Поз | 1 | 2 | 3 | 4 | 5 | 6 | 217 | 7 | 8 | 9 | 218 | 10 | 11 | 12 | 22 | 17 | 20 | 23 | 24 |
| 1 | ● | | ● | ● | ● | | | | | | | | | | ● | | | | |
| 2 | ● | | ● | ● | ● | | | | | ● | | | | | ● | | | | |
| 3 | ● | | ● | ● | ● | | | | | ● | | | ● | | ● | | | | |
| 4 | ● | | ● | ● | ● | | | ● | | ● | | | ● | | ● | | | | |
| 5 | ● | | ● | ● | ● | | ● | ● | | ● | | | ● | | ● | | | | |
| 6 | ● | | ● | ● | ● | | ● | ● | | ● | | ● | ● | | ● | | | | |
| 7 | ● | | ● | ● | ● | | ● | ● | | ● | | | | ● | ● | | | | |
| 8 | ● | | ● | ● | ● | | ● | ● | | ● | | ● | | ● | ● | | | | |
| 9 | ● | | ● | ● | ● | | ● | ● | | ● | ● | ● | | ● | ● | | | | |
| 10 | ● | | ● | ● | ● | | | | ● | ● | | | | ● | ● | | | | |
| 11 | ● | | ● | ● | ● | | | | ● | ● | ● | ● | | ● | ● | | | | |
| 12 | ● | | ● | ● | ● | | ● | | ● | ● | ● | ● | | ● | ● | | | | |
| 13 | ● | | ● | ● | ● | | | | ● | ● | | | ● | ● | ● | | | | |
| 14 | ● | | ● | ● | ● | | | ● | ● | ● | | | ● | ● | ● | | | | |
| 15 | ● | | ● | ● | ● | | | ● | ● | ● | | ● | ● | ● | ● | | | | |
| ХП | ● | | ● | ● | ● | | ● | ● | ● | ● | ● | ● | ● | ● | ● | | | | |

Упрощенная схема работы электровоза на " СП " соединении тяговых двигателей

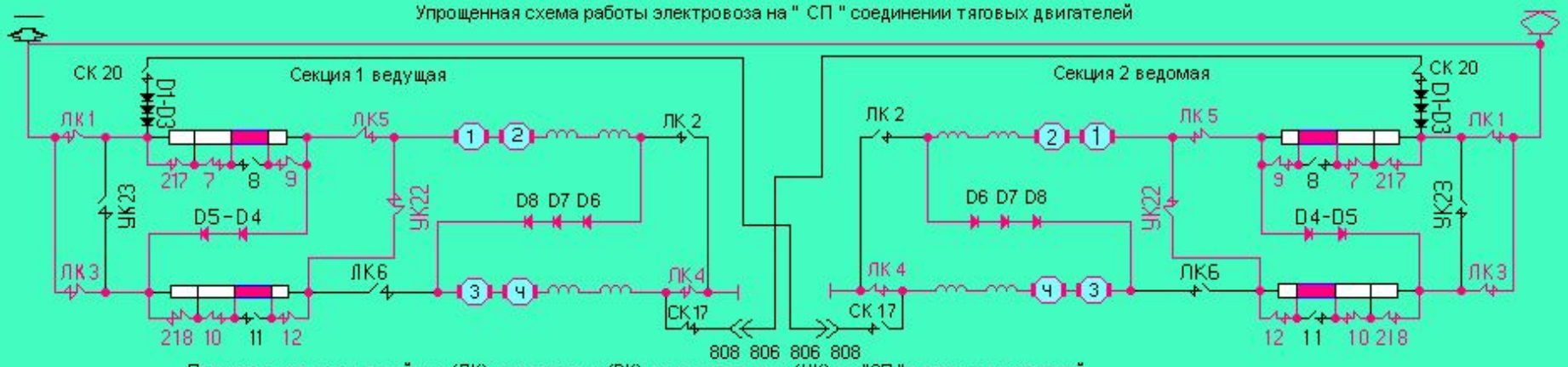


Порядок включения линейных (ЛК), реостатных (РК), уравнительных (УК) на "СП " тяговых двигателей

| № Поз | Линейные (ЛК) | | | | | | Реостатные (РК) | | | | | | | | | | | УК | |
|---|---|---|---|---|---|---|---|---|---|---|---|---|---|---|---|---|---|---|---|
| "СП" соединение | 1 | 2 | 3 | 4 | 5 | 6 | 217 | 7 | 8 | 9 | 218 | 10 | 11 | 12 | 22 | 17 | 20 | 23 | 24 |
| 1 | ● | | ● | ● | ● | | | | | | | | | | ● | | | | |
| 2 | ● | | ● | ● | ● | | | | | ● | | | | | ● | | | | |
| 3 | ● | | ● | ● | ● | | | | | ● | | | ● | | ● | | | | |
| 4 | ● | | ● | ● | ● | | | ● | | ● | | | ● | | ● | | | | |
| 5 | ● | | ● | ● | ● | | ● | ● | | ● | | | ● | | ● | | | | |
| 6 | ● | | ● | ● | ● | | ● | ● | | ● | | ● | ● | | ● | | | | |
| 7 | ● | | ● | ● | ● | | ● | ● | | ● | | | | ● | ● | | | | |
| 8 | ● | | ● | ● | ● | | ● | ● | | ● | | ● | | ● | ● | | | | |
| 9 | ● | | ● | ● | ● | | ● | ● | | ● | ● | ● | | ● | ● | | | | |
| 10 | ● | | ● | ● | ● | | | | ● | ● | | | | ● | ● | | | | |
| 11 | ● | | ● | ● | ● | | | | ● | ● | ● | ● | | ● | ● | | | | |
| 12 | ● | | ● | ● | ● | | ● | | ● | ● | ● | ● | | ● | ● | | | | |
| 13 | ● | | ● | ● | ● | | | | ● | ● | | | ● | ● | ● | | | | |
| 14 | ● | | ● | ● | ● | | | ● | ● | ● | | | ● | ● | ● | | | | |
| 15 | ● | | ● | ● | ● | | | ● | ● | ● | | ● | ● | ● | ● | | | | |
| ХП | ● | | ● | ● | ● | | ● | ● | ● | ● | ● | ● | ● | ● | ● | | | | |

Упрощенная схема работы электровоза на " СП " соединении тяговых двигателей

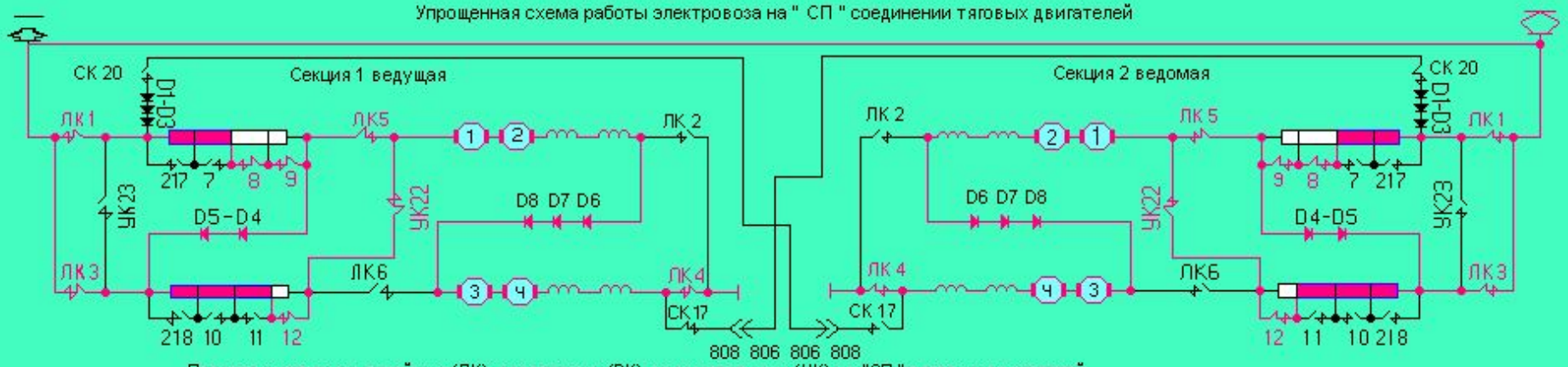


Порядок включения линейных (ЛК), реостатных (РК), уравнительных (УК) на "СП " тяговых двигателей

| № Поз | Линейные (ЛК) | | | | | | Реостатные (РК) | | | | | | | | | | | УК | |
|---|---|---|---|---|---|---|---|---|---|---|---|---|---|---|---|---|---|---|---|
| "СП" соединение | 1 | 2 | 3 | 4 | 5 | 6 | 217 | 7 | 8 | 9 | 218 | 10 | 11 | 12 | 22 | 17 | 20 | 23 | 24 |
| 1 | ● | | ● | ● | ● | | | | | | | | | | ● | | | | |
| 2 | ● | | ● | ● | ● | | | | | ● | | | | | ● | | | | |
| 3 | ● | | ● | ● | ● | | | | | ● | | | ● | | ● | | | | |
| 4 | ● | | ● | ● | ● | | | ● | | ● | | | ● | | ● | | | | |
| 5 | ● | | ● | ● | ● | | ● | ● | | ● | | | ● | | ● | | | | |
| 6 | ● | | ● | ● | ● | | ● | ● | | ● | | ● | ● | | ● | | | | |
| 7 | ● | | ● | ● | ● | | ● | ● | | ● | | | | ● | ● | | | | |
| 8 | ● | | ● | ● | ● | | ● | ● | | ● | | ● | | ● | ● | | | | |
| 9 | ● | | ● | ● | ● | | ● | ● | | ● | ● | ● | | ● | ● | | | | |
| 10 | ● | | ● | ● | ● | | | | ● | ● | | | | ● | ● | | | | |
| 11 | ● | | ● | ● | ● | | | | ● | ● | ● | ● | | ● | ● | | | | |
| 12 | ● | | ● | ● | ● | | ● | | ● | ● | ● | ● | | ● | ● | | | | |
| 13 | ● | | ● | ● | ● | | | | ● | ● | | | ● | ● | ● | | | | |
| 14 | ● | | ● | ● | ● | | | ● | ● | ● | | | ● | ● | ● | | | | |
| 15 | ● | | ● | ● | ● | | | ● | ● | ● | | ● | ● | ● | ● | | | | |
| ХП | ● | | ● | ● | ● | | ● | ● | ● | ● | ● | ● | ● | ● | ● | | | | |

Упрощенная схема работы электровоза на " СП " соединении тяговых двигателей

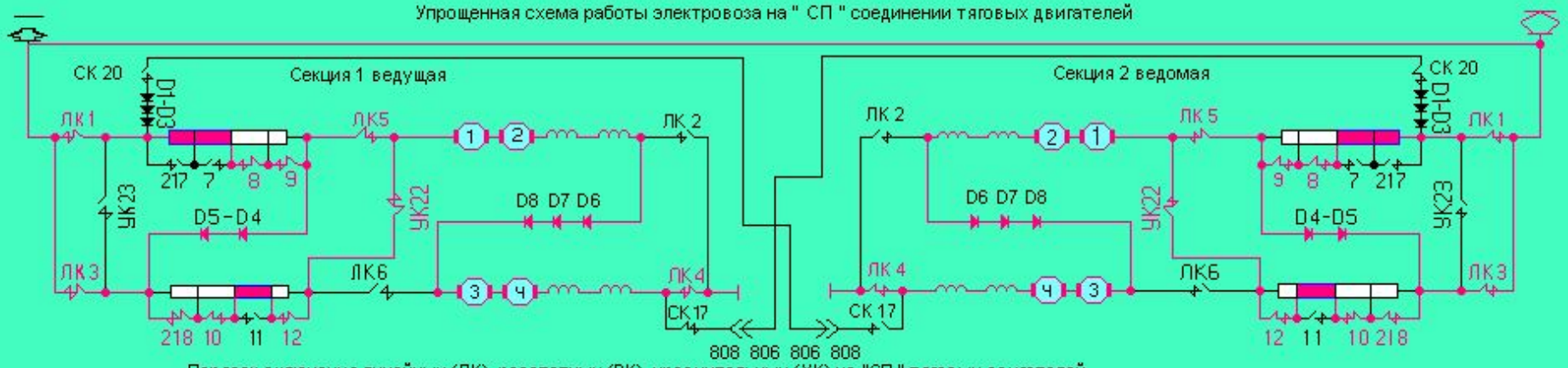


Порядок включения линейных (ЛК), реостатных (РК), уравнительных (УК) на "СП " тяговых двигателей

| № Поз | Линейные (ЛК) | | | | | | Реостатные (РК) | | | | | | | | | | | УК | |
|---|---|---|---|---|---|---|---|---|---|---|---|---|---|---|---|---|---|---|---|
| "СП" соединение | 1 | 2 | 3 | 4 | 5 | 6 | 217 | 7 | 8 | 9 | 218 | 10 | 11 | 12 | 22 | 17 | 20 | 23 | 24 |
| 1 | ● | | ● | ● | ● | | | | | | | | | | ● | | | | |
| 2 | ● | | ● | ● | ● | | | | | ● | | | | | ● | | | | |
| 3 | ● | | ● | ● | ● | | | | | ● | | | ● | | ● | | | | |
| 4 | ● | | ● | ● | ● | | | ● | | ● | | | ● | | ● | | | | |
| 5 | ● | | ● | ● | ● | | ● | ● | | ● | | | ● | | ● | | | | |
| 6 | ● | | ● | ● | ● | | ● | ● | | ● | | ● | ● | | ● | | | | |
| 7 | ● | | ● | ● | ● | | ● | ● | | ● | | | | ● | ● | | | | |
| 8 | ● | | ● | ● | ● | | ● | ● | | ● | | ● | | ● | ● | | | | |
| 9 | ● | | ● | ● | ● | | ● | ● | | ● | ● | ● | | ● | ● | | | | |
| 10 | ● | | ● | ● | ● | | | | ● | ● | | | | ● | ● | | | | |
| 11 | ● | | ● | ● | ● | | | | ● | ● | ● | ● | | ● | ● | | | | |
| 12 | ● | | ● | ● | ● | | ● | | ● | ● | ● | ● | | ● | ● | | | | |
| 13 | ● | | ● | ● | ● | | | | ● | ● | | | ● | ● | ● | | | | |
| 14 | ● | | ● | ● | ● | | | ● | ● | ● | | | ● | ● | ● | | | | |
| 15 | ● | | ● | ● | ● | | | ● | ● | ● | | ● | ● | ● | ● | | | | |
| ХП | ● | | ● | ● | ● | | ● | ● | ● | ● | ● | ● | ● | ● | ● | | | | |

Упрощенная схема работы электровоза на " СП " соединении тяговых двигателей

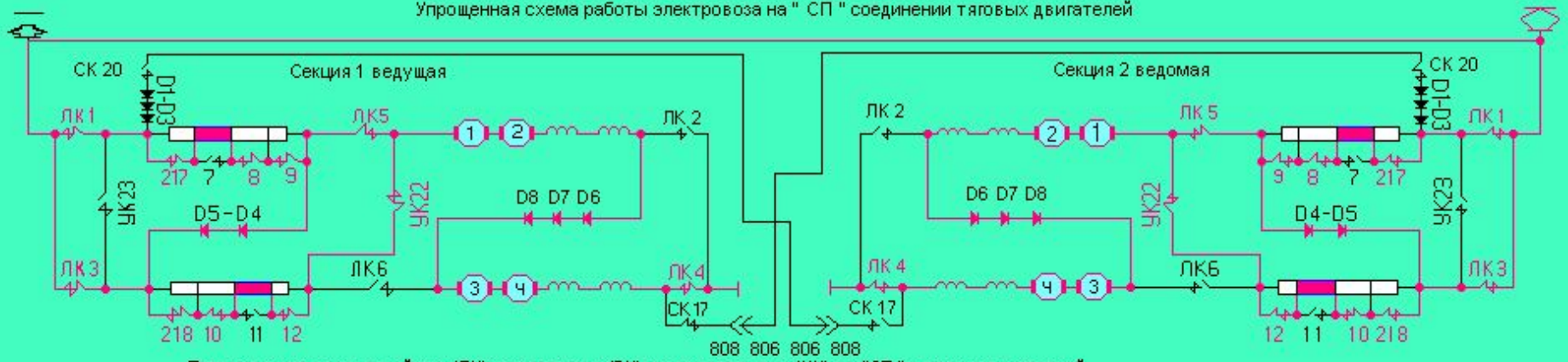


Порядок включения линейных (ЛК), реостатных (РК), уравнительных (УК) на "СП " тяговых двигателей

| № Поз | Линейные (ЛК) | | | | | | Реостатные (РК) | | | | | | | | | | | УК | |
|---|---|---|---|---|---|---|---|---|---|---|---|---|---|---|---|---|---|---|---|
| "СП" соединение | 1 | 2 | 3 | 4 | 5 | 6 | 217 | 7 | 8 | 9 | 218 | 10 | 11 | 12 | 22 | 17 | 20 | 23 | 24 |
| 1 | ● | | ● | ● | ● | | | | | | | | | | ● | | | | |
| 2 | ● | | ● | ● | ● | | | | | ● | | | | | ● | | | | |
| 3 | ● | | ● | ● | ● | | | | | ● | | | ● | | ● | | | | |
| 4 | ● | | ● | ● | ● | | | ● | | ● | | | ● | | ● | | | | |
| 5 | ● | | ● | ● | ● | | ● | ● | | ● | | | ● | | ● | | | | |
| 6 | ● | | ● | ● | ● | | ● | ● | | ● | | ● | ● | | ● | | | | |
| 7 | ● | | ● | ● | ● | | ● | ● | | ● | | | | ● | ● | | | | |
| 8 | ● | | ● | ● | ● | | ● | ● | | ● | | ● | | ● | ● | | | | |
| 9 | ● | | ● | ● | ● | | ● | ● | | ● | ● | ● | | ● | ● | | | | |
| 10 | ● | | ● | ● | ● | | | | ● | ● | | | | ● | ● | | | | |
| 11 | ● | | ● | ● | ● | | | | ● | ● | ● | ● | | ● | ● | | | | |
| 12 | ● | | ● | ● | ● | | ● | | ● | ● | ● | ● | | ● | ● | | | | |
| 13 | ● | | ● | ● | ● | | | | ● | ● | | | ● | ● | ● | | | | |
| 14 | ● | | ● | ● | ● | | | ● | ● | ● | | | ● | ● | ● | | | | |
| 15 | ● | | ● | ● | ● | | | ● | ● | ● | | ● | ● | ● | ● | | | | |
| ХП | ● | | ● | ● | ● | | ● | ● | ● | ● | ● | ● | ● | ● | ● | | | | |

Упрощенная схема работы электровоза на " СП " соединении тяговых двигателей

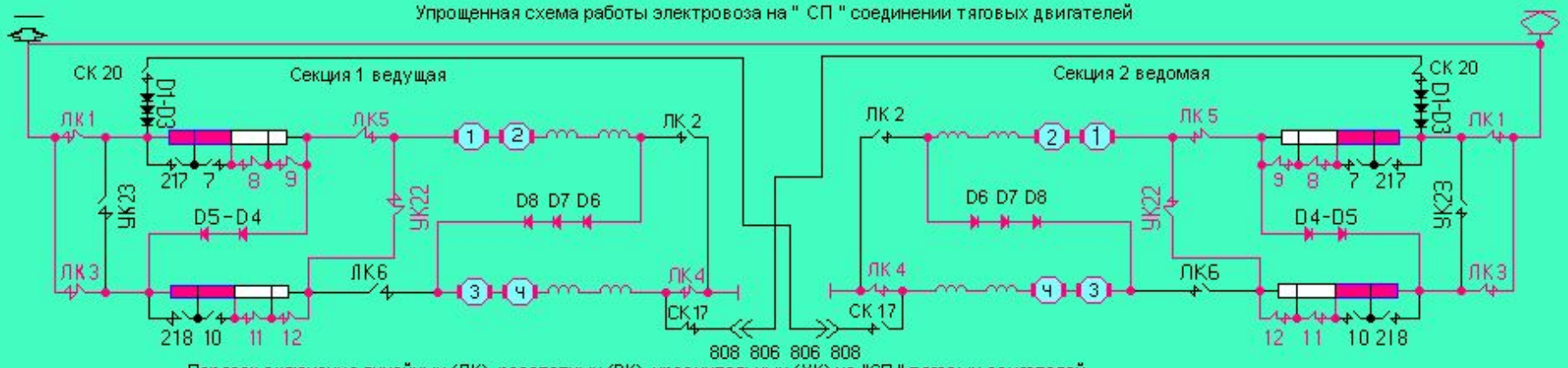


Порядок включения линейных (ЛК), реостатных (РК), уравнительных (УК) на "СП " тяговых двигателей

| № Поз | Линейные (ЛК) | | | | | | Реостатные (РК) | | | | | | | | | | | УК | |
|---|---|---|---|---|---|---|---|---|---|---|---|---|---|---|---|---|---|---|---|
| "СП" соединение | 1 | 2 | 3 | 4 | 5 | 6 | 217 | 7 | 8 | 9 | 218 | 10 | 11 | 12 | 22 | 17 | 20 | 23 | 24 |
| 1 | ● | | ● | ● | ● | | | | | | | | | | ● | | | | |
| 2 | ● | | ● | ● | ● | | | | | ● | | | | | ● | | | | |
| 3 | ● | | ● | ● | ● | | | | | ● | | | ● | | ● | | | | |
| 4 | ● | | ● | ● | ● | | | ● | | ● | | | ● | | ● | | | | |
| 5 | ● | | ● | ● | ● | | ● | ● | | ● | | | ● | | ● | | | | |
| 6 | ● | | ● | ● | ● | | ● | ● | | ● | | ● | ● | | ● | | | | |
| 7 | ● | | ● | ● | ● | | ● | ● | | ● | | | | ● | ● | | | | |
| 8 | ● | | ● | ● | ● | | ● | ● | | ● | | ● | | ● | ● | | | | |
| 9 | ● | | ● | ● | ● | | ● | ● | | ● | ● | ● | | ● | ● | | | | |
| 10 | ● | | ● | ● | ● | | | | ● | ● | | | | ● | ● | | | | |
| 11 | ● | | ● | ● | ● | | | | ● | ● | ● | ● | | ● | ● | | | | |
| 12 | ● | | ● | ● | ● | | ● | | ● | ● | ● | ● | | ● | ● | | | | |
| 13 | ● | | ● | ● | ● | | | | ● | ● | | | ● | ● | ● | | | | |
| 14 | ● | | ● | ● | ● | | | ● | ● | ● | | | ● | ● | ● | | | | |
| 15 | ● | | ● | ● | ● | | | ● | ● | ● | | ● | ● | ● | ● | | | | |
| ХП | ● | | ● | ● | ● | | ● | ● | ● | ● | ● | ● | ● | ● | ● | | | | |

Упрощенная схема работы электровоза на " СП " соединении тяговых двигателей

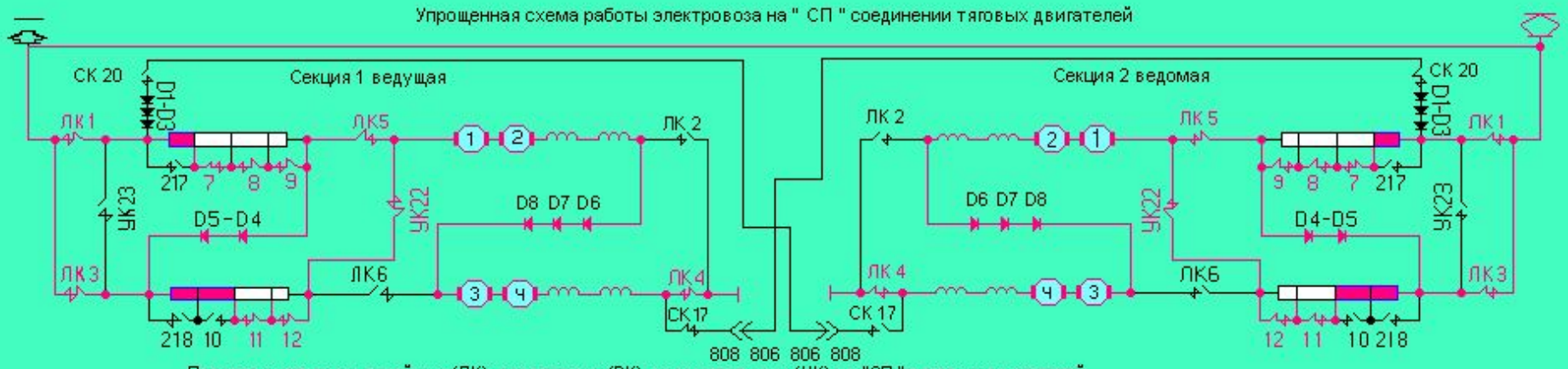


Порядок включения линейных (ЛК), реостатных (РК), уравнительных (УК) на "СП " тяговых двигателей

| № Поз | Линейные (ЛК) | | | | | | Реостатные (РК) | | | | | | | | | | | УК | |
|---|---|---|---|---|---|---|---|---|---|---|---|---|---|---|---|---|---|---|---|
| "СП" соединение | 1 | 2 | 3 | 4 | 5 | 6 | 217 | 7 | 8 | 9 | 218 | 10 | 11 | 12 | 22 | 17 | 20 | 23 | 24 |
| 1 | ● | | ● | ● | ● | | | | | | | | | | ● | | | | |
| 2 | ● | | ● | ● | ● | | | | | ● | | | | | ● | | | | |
| 3 | ● | | ● | ● | ● | | | | | ● | | | ● | | ● | | | | |
| 4 | ● | | ● | ● | ● | | | ● | | ● | | | ● | | ● | | | | |
| 5 | ● | | ● | ● | ● | | ● | ● | | ● | | | ● | | ● | | | | |
| 6 | ● | | ● | ● | ● | | ● | ● | | ● | | ● | ● | | ● | | | | |
| 7 | ● | | ● | ● | ● | | ● | ● | | ● | | | | ● | ● | | | | |
| 8 | ● | | ● | ● | ● | | ● | ● | | ● | | ● | | ● | ● | | | | |
| 9 | ● | | ● | ● | ● | | ● | ● | | ● | ● | ● | | ● | ● | | | | |
| 10 | ● | | ● | ● | ● | | | | ● | ● | | | | ● | ● | | | | |
| 11 | ● | | ● | ● | ● | | | | ● | ● | ● | ● | | ● | ● | | | | |
| 12 | ● | | ● | ● | ● | | ● | | ● | ● | ● | ● | | ● | ● | | | | |
| 13 | ● | | ● | ● | ● | | | | ● | ● | | | ● | ● | ● | | | | |
| 14 | ● | | ● | ● | ● | | | ● | ● | ● | | | ● | ● | ● | | | | |
| 15 | ● | | ● | ● | ● | | | ● | ● | ● | | ● | ● | ● | ● | | | | |
| ХП | ● | | ● | ● | ● | | ● | ● | ● | ● | ● | ● | ● | ● | ● | | | | |

Упрощенная схема работы электровоза на " СП " соединении тяговых двигателей

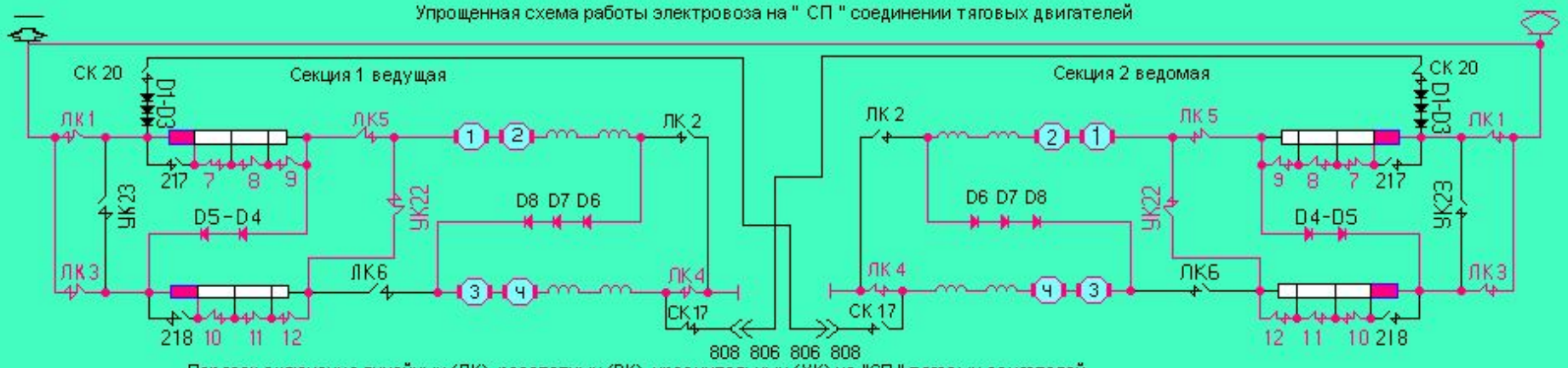


Порядок включения линейных (ЛК), реостатных (РК), уравнительных (УК) на "СП " тяговых двигателей

"СП" соединение

| № | Линейные (ЛК) | | | | | | Реостатные (РК) | | | | | | | | | | | УК | |
|---|---|---|---|---|---|---|---|---|---|---|---|---|---|---|---|---|---|---|---|
| Поз | 1 | 2 | 3 | 4 | 5 | 6 | 217 | 7 | 8 | 9 | 218 | 10 | 11 | 12 | 22 | 17 | 20 | 23 | 24 |
| 1 | ● | | ● | ● | ● | | | | | | | | | | ● | | | | |
| 2 | ● | | ● | ● | ● | | | | | ● | | | | | ● | | | | |
| 3 | ● | | ● | ● | ● | | | | | ● | | | ● | | ● | | | | |
| 4 | ● | | ● | ● | ● | | | ● | | ● | | | ● | | ● | | | | |
| 5 | ● | | ● | ● | ● | | ● | ● | | ● | | | ● | | ● | | | | |
| 6 | ● | | ● | ● | ● | | ● | ● | | ● | | ● | ● | | ● | | | | |
| 7 | ● | | ● | ● | ● | | ● | ● | | ● | | | | ● | ● | | | | |
| 8 | ● | | ● | ● | ● | | ● | ● | | ● | | ● | | ● | ● | | | | |
| 9 | ● | | ● | ● | ● | | ● | ● | | ● | ● | ● | | ● | ● | | | | |
| 10 | ● | | ● | ● | ● | | | | ● | ● | | | | ● | ● | | | | |
| 11 | ● | | ● | ● | ● | | | | ● | ● | ● | ● | | ● | ● | | | | |
| 12 | ● | | ● | ● | ● | | ● | | ● | ● | ● | ● | | ● | ● | | | | |
| 13 | ● | | ● | ● | ● | | | | ● | ● | | | ● | ● | ● | | | | |
| 14 | ● | | ● | ● | ● | | | ● | ● | ● | | | ● | ● | ● | | | | |
| 15 | ● | | ● | ● | ● | | | ● | ● | ● | | ● | ● | ● | ● | | | | |
| ХП | ● | | ● | ● | ● | | ● | ● | ● | ● | ● | ● | ● | ● | ● | | | | |

Упрощенная схема работы электровоза на " СП " соединении тяговых двигателей

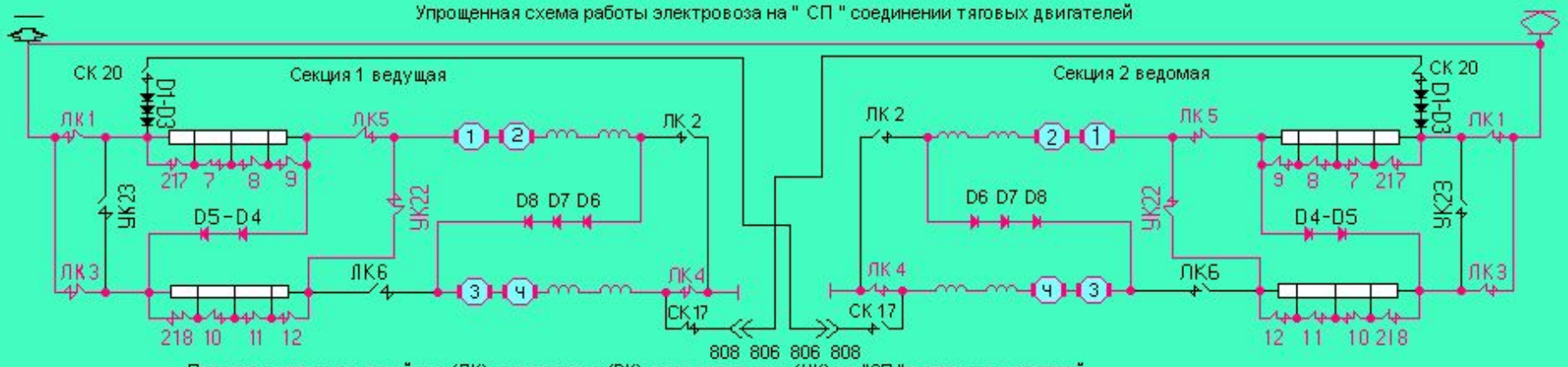


Порядок включения линейных (ЛК), реостатных (РК), уравнительных (УК) на "СП " тяговых двигателей

| № Поз | Линейные (ЛК) | | | | | | Реостатные (РК) | | | | | | | | | | | УК | |
|---|---|---|---|---|---|---|---|---|---|---|---|---|---|---|---|---|---|---|---|
| "СП" соединение | 1 | 2 | 3 | 4 | 5 | 6 | 217 | 7 | 8 | 9 | 218 | 10 | 11 | 12 | 22 | 17 | 20 | 23 | 24 |
| 1 | ● | | ● | ● | ● | | | | | | | | | | ● | | | | |
| 2 | ● | | ● | ● | ● | | | | | ● | | | | | ● | | | | |
| 3 | ● | | ● | ● | ● | | | | | ● | | | ● | | ● | | | | |
| 4 | ● | | ● | ● | ● | | | ● | | ● | | | ● | | ● | | | | |
| 5 | ● | | ● | ● | ● | | ● | ● | | ● | | | ● | | ● | | | | |
| 6 | ● | | ● | ● | ● | | ● | ● | | ● | | ● | ● | | ● | | | | |
| 7 | ● | | ● | ● | ● | | ● | ● | | ● | | | | ● | ● | | | | |
| 8 | ● | | ● | ● | ● | | ● | ● | | ● | | ● | | ● | ● | | | | |
| 9 | ● | | ● | ● | ● | | ● | ● | | ● | ● | ● | | ● | ● | | | | |
| 10 | ● | | ● | ● | ● | | | | ● | ● | | | | ● | ● | | | | |
| 11 | ● | | ● | ● | ● | | | | ● | ● | ● | ● | | ● | ● | | | | |
| 12 | ● | | ● | ● | ● | | ● | | ● | ● | ● | ● | | ● | ● | | | | |
| 13 | ● | | ● | ● | ● | | | | ● | ● | | | ● | ● | ● | | | | |
| 14 | ● | | ● | ● | ● | | | ● | ● | ● | | | ● | ● | ● | | | | |
| 15 | ● | | ● | ● | ● | | | ● | ● | ● | | ● | ● | ● | ● | | | | |
| ХП | ● | | ● | ● | ● | | ● | ● | ● | ● | ● | ● | ● | ● | ● | | | | |

Упрощенная схема работы электровоза в режиме без " С " соединении тяговых двигателей

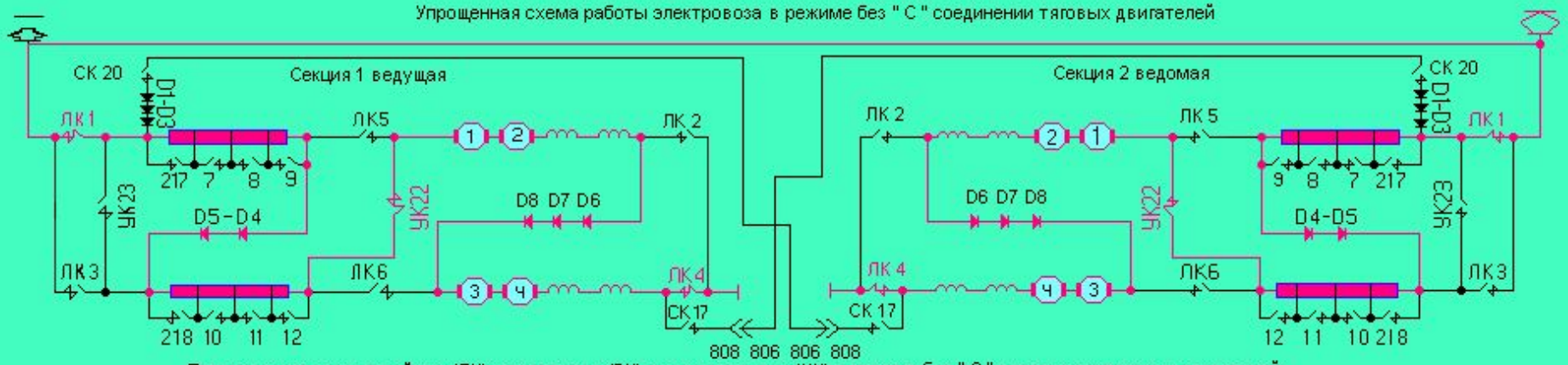


Порядок включения линейных (ЛК), реостатных (РК), уравнительных (УК) в режиме без " С " соединении тяговых двигателей

| № Поз | Линейные (ЛК) | | | | | | Реостатные (РК) | | | | | | | | | | | УК | |
|---|---|---|---|---|---|---|---|---|---|---|---|---|---|---|---|---|---|---|---|
| | 1 | 2 | 3 | 4 | 5 | 6 | 217 | 7 | 8 | 9 | 218 | 10 | 11 | 12 | 22 | 17 | 20 | 23 | 24 |
| 1 | ● | | | ● | | | | | | | | | | | ● | | | | |
| 2 | ● | | | ● | | | | | | ● | | | | | ● | | | | |
| 3 | ● | | | ● | | | | | ● | ● | | | | | ● | | | | |
| 4 | ● | | ● | ● | | | | | | | | | | | ● | | | | |
| 5 | ● | | ● | ● | | | | | | | ● | ● | | | ● | | | | |
| 6 | ● | | ● | ● | ● | | | | | | | | | | ● | | | | |
| 7 | ● | | ● | ● | ● | | | | | ● | | | | | ● | | | | |
| 8 | ● | | ● | ● | ● | | | | | ● | | | ● | | ● | | | | |
| 9 | ● | | ● | ● | ● | | | ● | | ● | | | ● | | ● | | | | |
| 10 | ● | | ● | ● | ● | | ● | ● | | ● | | | ● | | ● | | | | |
| 11 | ● | | ● | ● | ● | | ● | ● | | ● | | ● | ● | | ● | | | | |
| 12 | ● | | ● | ● | ● | | ● | ● | | ● | | | | ● | ● | | | | |
| 13 | ● | | ● | ● | ● | | ● | ● | | ● | | ● | | ● | ● | | | | |
| 14 | ● | | ● | ● | ● | | ● | ● | | ● | ● | ● | | ● | ● | | | | |
| 15 | ● | | ● | ● | ● | | | | ● | ● | | | | ● | ● | | | | |
| 16 | ● | | ● | ● | ● | | | | ● | ● | ● | ● | | ● | ● | | | | |
| 17 | ● | | ● | ● | ● | | ● | | ● | ● | ● | ● | | ● | ● | | | | |
| 18 | ● | | ● | ● | ● | | | | ● | ● | | | ● | ● | ● | | | | |
| 19 | ● | | ● | ● | ● | | | ● | ● | ● | | | ● | ● | ● | | | | |
| 20 | ● | | ● | ● | ● | | | ● | ● | ● | | ● | ● | ● | ● | | | | |
| ХП | ● | | ● | ● | ● | | ● | ● | ● | ● | ● | ● | ● | ● | ● | | | | |

Упрощенная схема работы электровоза в режиме без " С " соединении тяговых двигателей

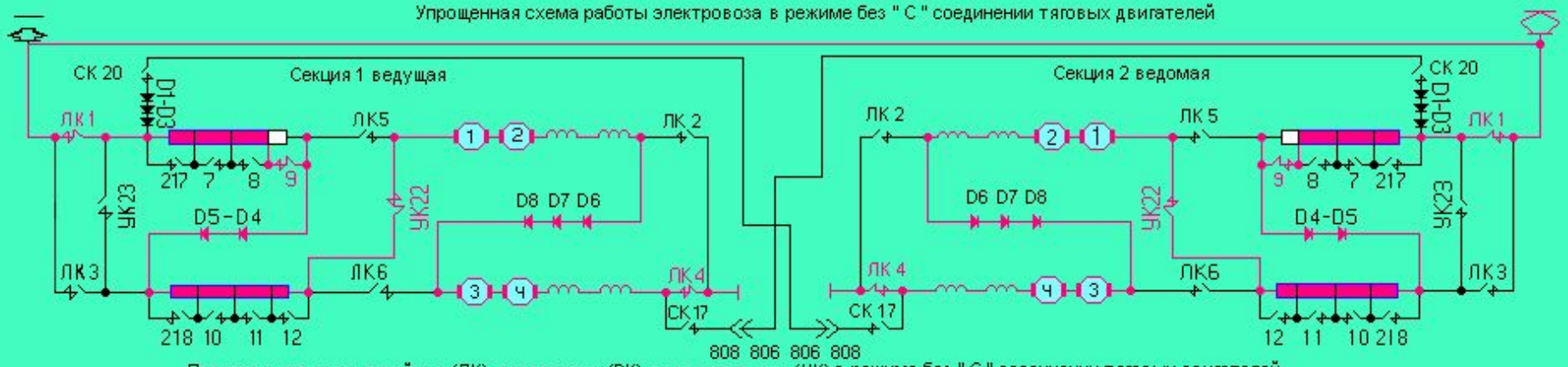


Порядок включения линейных (ЛК), реостатных (РК), уравнительных (УК) в режиме без " С " соединении тяговых двигателей

| № | Линейные (ЛК) | | | | | | Реостатные (РК) | | | | | | | | | | | УК | |
|---|---|---|---|---|---|---|---|---|---|---|---|---|---|---|---|---|---|---|---|
| Поз | 1 | 2 | 3 | 4 | 5 | 6 | 217 | 7 | 8 | 9 | 218 | 10 | 11 | 12 | 22 | 17 | 20 | 23 | 24 |
| 1 | ● | | | ● | | | | | | | | | | | ● | | | | |
| 2 | ● | | | ● | | | | | | ● | | | | | ● | | | | |
| 3 | ● | | | ● | | | | | ● | ● | | | | | ● | | | | |
| 4 | ● | | ● | ● | | | | | | | | | | | ● | | | | |
| 5 | ● | | ● | ● | | | | | | | ● | ● | | | ● | | | | |
| 6 | ● | | ● | ● | ● | | | | | | | | | | ● | | | | |
| 7 | ● | | ● | ● | ● | | | | | ● | | | | | ● | | | | |
| 8 | ● | | ● | ● | ● | | | | | ● | | | ● | | ● | | | | |
| 9 | ● | | ● | ● | ● | | | ● | | ● | | | ● | | ● | | | | |
| 10 | ● | | ● | ● | ● | | ● | ● | | ● | | | ● | | ● | | | | |
| 11 | ● | | ● | ● | ● | | ● | ● | | ● | | ● | ● | | ● | | | | |
| 12 | ● | | ● | ● | ● | | ● | ● | | ● | | | | ● | ● | | | | |
| 13 | ● | | ● | ● | ● | | ● | ● | | ● | | ● | | ● | ● | | | | |
| 14 | ● | | ● | ● | ● | | ● | ● | | ● | ● | ● | | ● | ● | | | | |
| 15 | ● | | ● | ● | ● | | | | ● | ● | | | | ● | ● | | | | |
| 16 | ● | | ● | ● | ● | | | | ● | ● | ● | ● | | ● | ● | | | | |
| 17 | ● | | ● | ● | ● | | ● | | ● | ● | ● | ● | | ● | ● | | | | |
| 18 | ● | | ● | ● | ● | | | | ● | ● | | | ● | ● | ● | | | | |
| 19 | ● | | ● | ● | ● | | | ● | ● | ● | | | ● | ● | ● | | | | |
| 20 | ● | | ● | ● | ● | | | ● | ● | ● | | ● | ● | ● | ● | | | | |
| ХП | ● | | ● | ● | ● | | ● | ● | ● | ● | ● | ● | ● | ● | ● | | | | |

Упрощенная схема работы электровоза в режиме без " С " соединении тяговых двигателей

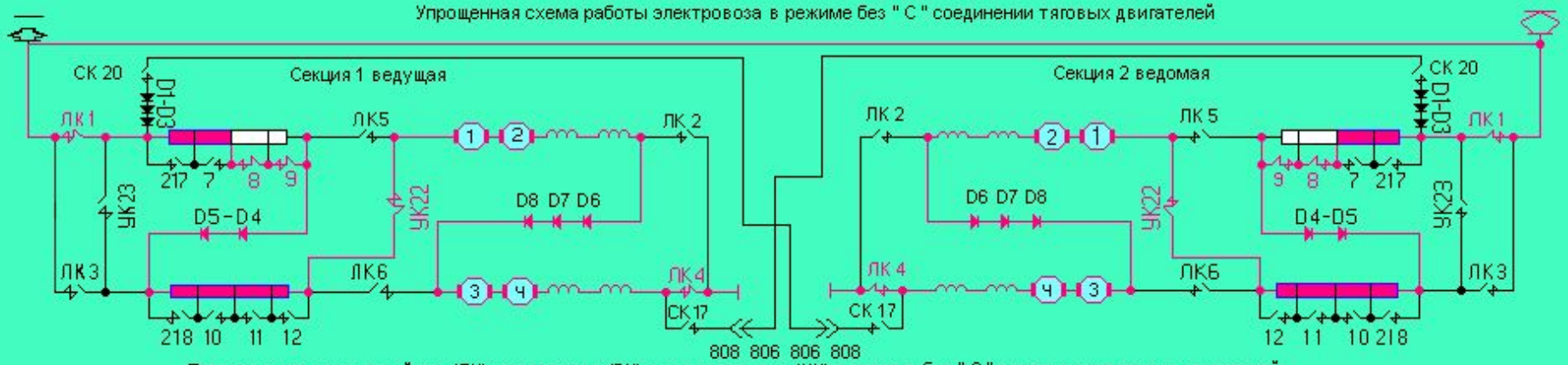


Порядок включения линейных (ЛК), реостатных (РК), уравнительных (УК) в режиме без " С " соединении тяговых двигателей

| № | Линейные (ЛК) | | | | | | Реостатные (РК) | | | | | | | | | | | УК | |
|---|---|---|---|---|---|---|---|---|---|---|---|---|---|---|---|---|---|---|---|
| Поз | 1 | 2 | 3 | 4 | 5 | 6 | 217 | 7 | 8 | 9 | 218 | 10 | 11 | 12 | 22 | 17 | 20 | 23 | 24 |
| 1 | ● | | | ● | | | | | | | | | | | ● | | | | |
| 2 | ● | | | ● | | | | | | ● | | | | | ● | | | | |
| 3 | ● | | | ● | | | | | ● | ● | | | | | ● | | | | |
| 4 | ● | | ● | ● | | | | | | | | | | | ● | | | | |
| 5 | ● | | ● | ● | | | | | | | ● | ● | | | ● | | | | |
| 6 | ● | | ● | ● | ● | | | | | | | | | | ● | | | | |
| 7 | ● | | ● | ● | ● | | | | | ● | | | | | ● | | | | |
| 8 | ● | | ● | ● | ● | | | | | ● | | | ● | | ● | | | | |
| 9 | ● | | ● | ● | ● | | | ● | | ● | | | ● | | ● | | | | |
| 10 | ● | | ● | ● | ● | | ● | ● | | ● | | | ● | | ● | | | | |
| 11 | ● | | ● | ● | ● | | ● | ● | | ● | | ● | ● | | ● | | | | |
| 12 | ● | | ● | ● | ● | | ● | ● | | ● | | | | ● | ● | | | | |
| 13 | ● | | ● | ● | ● | | ● | ● | | ● | | ● | | ● | ● | | | | |
| 14 | ● | | ● | ● | ● | | ● | ● | | ● | ● | ● | | ● | ● | | | | |
| 15 | ● | | ● | ● | ● | | | | ● | ● | | | | ● | ● | | | | |
| 16 | ● | | ● | ● | ● | | | | ● | ● | ● | ● | | ● | ● | | | | |
| 17 | ● | | ● | ● | ● | | ● | | ● | ● | ● | ● | | ● | ● | | | | |
| 18 | ● | | ● | ● | ● | | | | ● | ● | | | ● | ● | ● | | | | |
| 19 | ● | | ● | ● | ● | | | ● | ● | ● | | | ● | ● | ● | | | | |
| 20 | ● | | ● | ● | ● | | | ● | ● | ● | | ● | ● | ● | ● | | | | |
| ХП | ● | | ● | ● | ● | | ● | ● | ● | ● | ● | ● | ● | ● | ● | | | | |

Упрощенная схема работы электровоза в режиме без " С " соединении тяговых двигателей

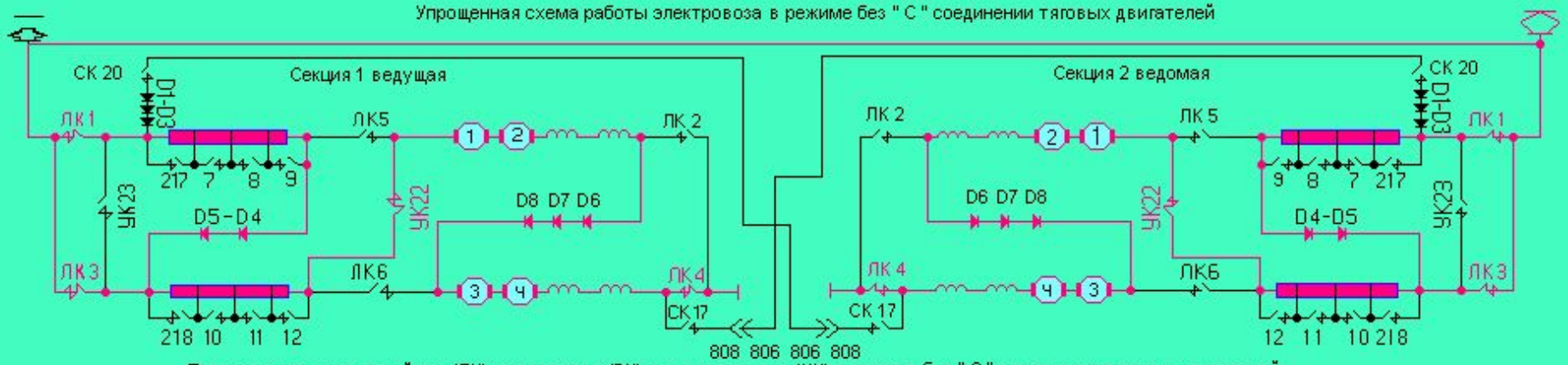


Порядок включения линейных (ЛК), реостатных (РК), уравнительных (УК) в режиме без " С " соединении тяговых двигателей

| № | Линейные (ЛК) | | | | | | Реостатные (РК) | | | | | | | | | | | УК | |
|---|---|---|---|---|---|---|---|---|---|---|---|---|---|---|---|---|---|---|---|
| Поз | 1 | 2 | 3 | 4 | 5 | 6 | 217 | 7 | 8 | 9 | 218 | 10 | 11 | 12 | 22 | 17 | 20 | 23 | 24 |
| 1 | ● | | | ● | | | | | | | | | | | ● | | | | |
| 2 | ● | | | ● | | | | | | ● | | | | | ● | | | | |
| 3 | ● | | | ● | | | | | ● | ● | | | | | ● | | | | |
| 4 | ● | | ● | ● | | | | | | | | | | | ● | | | | |
| 5 | ● | | ● | ● | | | | | | | ● | ● | | | ● | | | | |
| 6 | ● | | ● | ● | ● | | | | | | | | | | ● | | | | |
| 7 | ● | | ● | ● | ● | | | | | ● | | | | | ● | | | | |
| 8 | ● | | ● | ● | ● | | | | | ● | | | ● | | ● | | | | |
| 9 | ● | | ● | ● | ● | | | ● | | ● | | | ● | | ● | | | | |
| 10 | ● | | ● | ● | ● | | ● | ● | | ● | | | ● | | ● | | | | |
| 11 | ● | | ● | ● | ● | | ● | ● | | ● | | ● | ● | | ● | | | | |
| 12 | ● | | ● | ● | ● | | ● | ● | | ● | | | | ● | ● | | | | |
| 13 | ● | | ● | ● | ● | | ● | ● | | ● | | ● | | ● | ● | | | | |
| 14 | ● | | ● | ● | ● | | ● | ● | | ● | ● | ● | | ● | ● | | | | |
| 15 | ● | | ● | ● | ● | | | | ● | ● | | | | ● | ● | | | | |
| 16 | ● | | ● | ● | ● | | | | ● | ● | ● | ● | | ● | ● | | | | |
| 17 | ● | | ● | ● | ● | | ● | | ● | ● | ● | ● | | ● | ● | | | | |
| 18 | ● | | ● | ● | ● | | | | ● | ● | | | ● | ● | ● | | | | |
| 19 | ● | | ● | ● | ● | | | ● | ● | ● | | | ● | ● | ● | | | | |
| 20 | ● | | ● | ● | ● | | | ● | ● | ● | | ● | ● | ● | ● | | | | |
| ХП | ● | | ● | ● | ● | | ● | ● | ● | ● | ● | ● | ● | ● | ● | | | | |

Упрощенная схема работы электровоза в режиме без " С " соединении тяговых двигателей

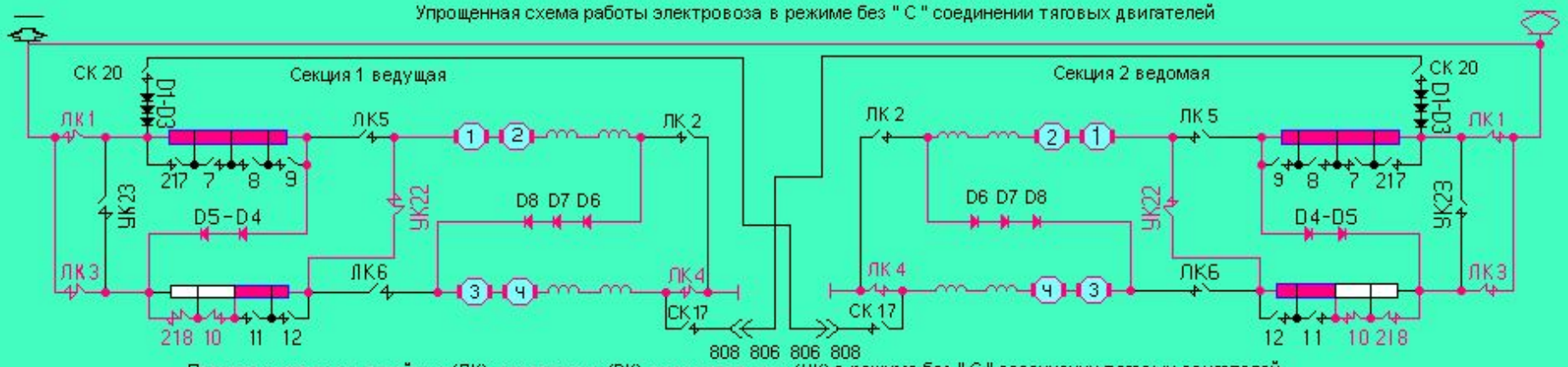


Порядок включения линейных (ЛК), реостатных (РК), уравнительных (УК) в режиме без " С " соединении тяговых двигателей

| № | Линейные (ЛК) | | | | | | Реостатные (РК) | | | | | | | | | | | УК | |
|---|---|---|---|---|---|---|---|---|---|---|---|---|---|---|---|---|---|---|---|
| Поз | 1 | 2 | 3 | 4 | 5 | 6 | 217 | 7 | 8 | 9 | 218 | 10 | 11 | 12 | 22 | 17 | 20 | 23 | 24 |
| 1 | ● | | | ● | | | | | | | | | | | ● | | | | |
| 2 | ● | | | ● | | | | | | ● | | | | | ● | | | | |
| 3 | ● | | | ● | | | | | ● | ● | | | | | ● | | | | |
| 4 | ● | | ● | ● | | | | | | | | | | | ● | | | | |
| 5 | ● | | ● | ● | | | | | | | ● | ● | | | ● | | | | |
| 6 | ● | | ● | ● | ● | | | | | | | | | | ● | | | | |
| 7 | ● | | ● | ● | ● | | | | | ● | | | | | ● | | | | |
| 8 | ● | | ● | ● | ● | | | | | ● | | | ● | | ● | | | | |
| 9 | ● | | ● | ● | ● | | | ● | | ● | | | ● | | ● | | | | |
| 10 | ● | | ● | ● | ● | | ● | ● | | ● | | | ● | | ● | | | | |
| 11 | ● | | ● | ● | ● | | ● | ● | | ● | | ● | ● | | ● | | | | |
| 12 | ● | | ● | ● | ● | | ● | ● | | ● | | | | ● | ● | | | | |
| 13 | ● | | ● | ● | ● | | ● | ● | | ● | | ● | | ● | ● | | | | |
| 14 | ● | | ● | ● | ● | | ● | ● | | ● | ● | ● | | ● | ● | | | | |
| 15 | ● | | ● | ● | ● | | | | ● | ● | | | | ● | ● | | | | |
| 16 | ● | | ● | ● | ● | | | | ● | ● | ● | ● | | ● | ● | | | | |
| 17 | ● | | ● | ● | ● | | ● | | ● | ● | ● | ● | | ● | ● | | | | |
| 18 | ● | | ● | ● | ● | | | | ● | ● | | | ● | ● | ● | | | | |
| 19 | ● | | ● | ● | ● | | | ● | ● | ● | | | ● | ● | ● | | | | |
| 20 | ● | | ● | ● | ● | | | ● | ● | ● | | ● | ● | ● | ● | | | | |
| ХП | ● | | ● | ● | ● | | ● | ● | ● | ● | ● | ● | ● | ● | ● | | | | |

Упрощенная схема работы электровоза в режиме без " С " соединении тяговых двигателей

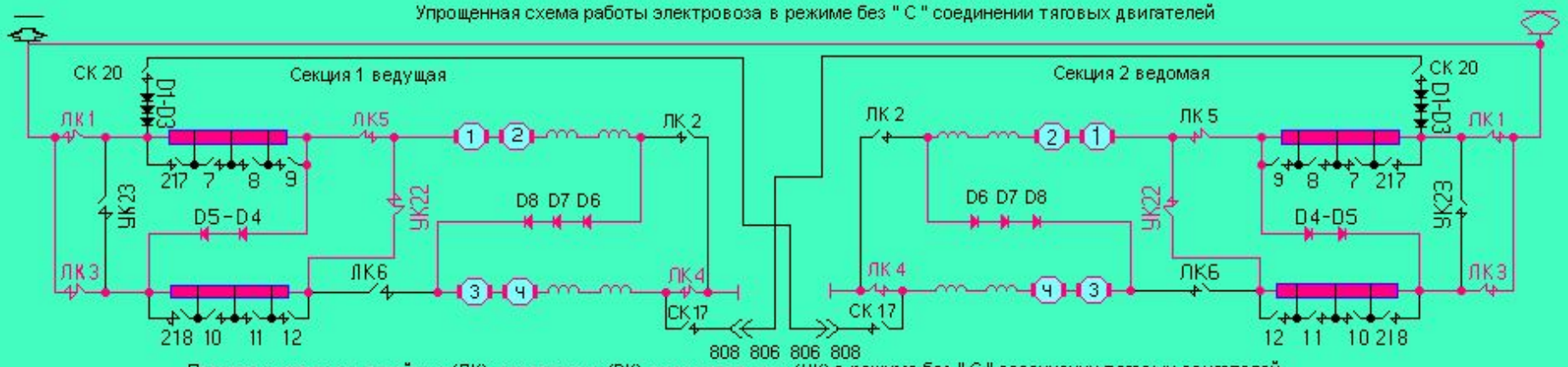


Порядок включения линейных (ЛК), реостатных (РК), уравнительных (УК) в режиме без " С " соединении тяговых двигателей

| № | Линейные (ЛК) | | | | | | Реостатные (РК) | | | | | | | | | | | УК | |
|---|---|---|---|---|---|---|---|---|---|---|---|---|---|---|---|---|---|---|---|
| Поз | 1 | 2 | 3 | 4 | 5 | 6 | 217 | 7 | 8 | 9 | 218 | 10 | 11 | 12 | 22 | 17 | 20 | 23 | 24 |
| 1 | ● | | | ● | | | | | | | | | | | ● | | | | |
| 2 | ● | | | ● | | | | | | ● | | | | | ● | | | | |
| 3 | ● | | | ● | | | | | ● | ● | | | | | ● | | | | |
| 4 | ● | | ● | ● | | | | | | | | | | | ● | | | | |
| 5 | ● | | ● | ● | | | | | | | ● | ● | | | ● | | | | |
| 6 | ● | | ● | ● | ● | | | | | | | | | | ● | | | | |
| 7 | ● | | ● | ● | ● | | | | | ● | | | | | ● | | | | |
| 8 | ● | | ● | ● | ● | | | | | ● | | | ● | | ● | | | | |
| 9 | ● | | ● | ● | ● | | | ● | | ● | | | ● | | ● | | | | |
| 10 | ● | | ● | ● | ● | | ● | ● | | ● | | | ● | | ● | | | | |
| 11 | ● | | ● | ● | ● | | ● | ● | | ● | | ● | ● | | ● | | | | |
| 12 | ● | | ● | ● | ● | | ● | ● | | ● | | | | ● | ● | | | | |
| 13 | ● | | ● | ● | ● | | ● | ● | | ● | | ● | | ● | ● | | | | |
| 14 | ● | | ● | ● | ● | | ● | ● | | ● | ● | ● | | ● | ● | | | | |
| 15 | ● | | ● | ● | ● | | | | ● | ● | | | | ● | ● | | | | |
| 16 | ● | | ● | ● | ● | | | | ● | ● | ● | ● | | ● | ● | | | | |
| 17 | ● | | ● | ● | ● | | ● | | ● | ● | ● | ● | | ● | ● | | | | |
| 18 | ● | | ● | ● | ● | | | | ● | ● | | | ● | ● | ● | | | | |
| 19 | ● | | ● | ● | ● | | | ● | ● | ● | | | ● | ● | ● | | | | |
| 20 | ● | | ● | ● | ● | | | ● | ● | ● | | ● | ● | ● | ● | | | | |
| ХП | ● | | ● | ● | ● | | ● | ● | ● | ● | ● | ● | ● | ● | ● | | | | |

Упрощенная схема работы электровоза в режиме без " С " соединении тяговых двигателей

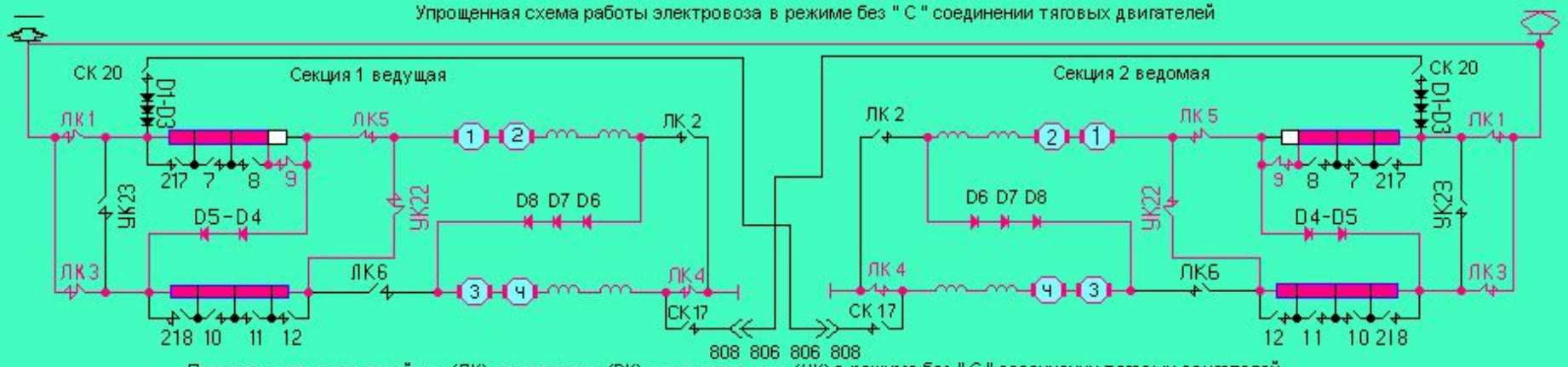


Порядок включения линейных (ЛК), реостатных (РК), уравнительных (УК) в режиме без " С " соединении тяговых двигателей

| № | Линейные (ЛК) | | | | | | Реостатные (РК) | | | | | | | | | | | УК | |
|---|---|---|---|---|---|---|---|---|---|---|---|---|---|---|---|---|---|---|---|
| Поз | 1 | 2 | 3 | 4 | 5 | 6 | 217 | 7 | 8 | 9 | 218 | 10 | 11 | 12 | 22 | 17 | 20 | 23 | 24 |
| 1 | ● | | | ● | | | | | | | | | | | ● | | | | |
| 2 | ● | | | ● | | | | | | ● | | | | | ● | | | | |
| 3 | ● | | | ● | | | | | ● | ● | | | | | ● | | | | |
| 4 | ● | | ● | ● | | | | | | | | | | | ● | | | | |
| 5 | ● | | ● | ● | | | | | | | ● | ● | | | ● | | | | |
| 6 | ● | | ● | ● | ● | | | | | | | | | | ● | | | | |
| 7 | ● | | ● | ● | ● | | | | | ● | | | | | ● | | | | |
| 8 | ● | | ● | ● | ● | | | | | ● | | | ● | | ● | | | | |
| 9 | ● | | ● | ● | ● | | | ● | | ● | | | ● | | ● | | | | |
| 10 | ● | | ● | ● | ● | | ● | ● | | ● | | | ● | | ● | | | | |
| 11 | ● | | ● | ● | ● | | ● | ● | | ● | | ● | ● | | ● | | | | |
| 12 | ● | | ● | ● | ● | | ● | ● | | ● | | | | ● | ● | | | | |
| 13 | ● | | ● | ● | ● | | ● | ● | | ● | | ● | | ● | ● | | | | |
| 14 | ● | | ● | ● | ● | | ● | ● | | ● | ● | ● | | ● | ● | | | | |
| 15 | ● | | ● | ● | ● | | | | ● | ● | | | | ● | ● | | | | |
| 16 | ● | | ● | ● | ● | | | | ● | ● | ● | ● | | ● | ● | | | | |
| 17 | ● | | ● | ● | ● | | ● | | ● | ● | ● | ● | | ● | ● | | | | |
| 18 | ● | | ● | ● | ● | | | | ● | ● | | | ● | ● | ● | | | | |
| 19 | ● | | ● | ● | ● | | | ● | ● | ● | | | ● | ● | ● | | | | |
| 20 | ● | | ● | ● | ● | | | ● | ● | ● | | ● | ● | ● | ● | | | | |
| ХП | ● | | ● | ● | ● | | ● | ● | ● | ● | ● | ● | ● | ● | ● | | | | |

Упрощенная схема работы электровоза в режиме без " С " соединении тяговых двигателей

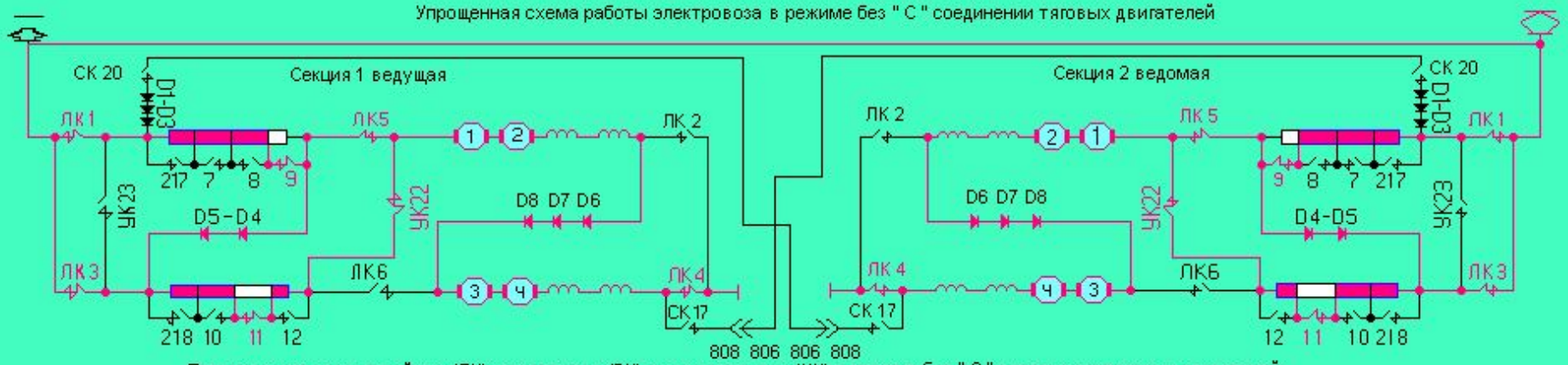


Порядок включения линейных (ЛК), реостатных (РК), уравнительных (УК) в режиме без " С " соединении тяговых двигателей

| № | Линейные (ЛК) | | | | | | Реостатные (РК) | | | | | | | | | | | УК | |
|---|---|---|---|---|---|---|---|---|---|---|---|---|---|---|---|---|---|---|---|
| Поз | 1 | 2 | 3 | 4 | 5 | 6 | 217 | 7 | 8 | 9 | 218 | 10 | 11 | 12 | 22 | 17 | 20 | 23 | 24 |
| 1 | ● | | | ● | | | | | | | | | | | ● | | | | |
| 2 | ● | | | ● | | | | | | ● | | | | | ● | | | | |
| 3 | ● | | | ● | | | | | ● | ● | | | | | ● | | | | |
| 4 | ● | | ● | ● | | | | | | | | | | | ● | | | | |
| 5 | ● | | ● | ● | | | | | | | ● | ● | | | ● | | | | |
| 6 | ● | | ● | ● | ● | | | | | | | | | | ● | | | | |
| 7 | ● | | ● | ● | ● | | | | | ● | | | | | ● | | | | |
| 8 | ● | | ● | ● | ● | | | | | ● | | | ● | | ● | | | | |
| 9 | ● | | ● | ● | ● | | | ● | | ● | | | ● | | ● | | | | |
| 10 | ● | | ● | ● | ● | | ● | ● | | ● | | | ● | | ● | | | | |
| 11 | ● | | ● | ● | ● | | ● | ● | | ● | | ● | ● | | ● | | | | |
| 12 | ● | | ● | ● | ● | | ● | ● | | ● | | | | ● | ● | | | | |
| 13 | ● | | ● | ● | ● | | ● | ● | | ● | | ● | | ● | ● | | | | |
| 14 | ● | | ● | ● | ● | | ● | ● | | ● | ● | ● | | ● | ● | | | | |
| 15 | ● | | ● | ● | ● | | | | ● | ● | | | | ● | ● | | | | |
| 16 | ● | | ● | ● | ● | | | | ● | ● | ● | ● | | ● | ● | | | | |
| 17 | ● | | ● | ● | ● | | ● | | ● | ● | ● | ● | | ● | ● | | | | |
| 18 | ● | | ● | ● | ● | | | | ● | ● | | | ● | ● | ● | | | | |
| 19 | ● | | ● | ● | ● | | | ● | ● | ● | | | ● | ● | ● | | | | |
| 20 | ● | | ● | ● | ● | | | ● | ● | ● | | ● | ● | ● | ● | | | | |
| ХП | ● | | ● | ● | ● | | ● | ● | ● | ● | ● | ● | ● | ● | ● | | | | |

Упрощенная схема работы электровоза в режиме без " С " соединении тяговых двигателей

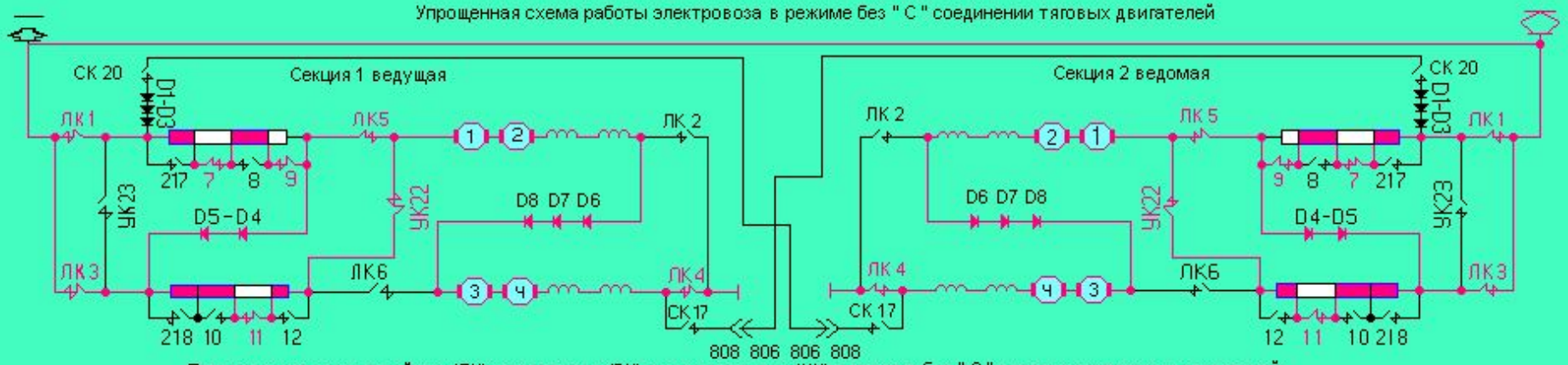


Порядок включения линейных (ЛК), реостатных (РК), уравнительных (УК) в режиме без " С " соединении тяговых двигателей

| № | Линейные (ЛК) | | | | | | Реостатные (РК) | | | | | | | | | | | УК | |
|---|---|---|---|---|---|---|---|---|---|---|---|---|---|---|---|---|---|---|---|
| Поз | 1 | 2 | 3 | 4 | 5 | 6 | 217 | 7 | 8 | 9 | 218 | 10 | 11 | 12 | 22 | 17 | 20 | 23 | 24 |
| 1 | ● | | | ● | | | | | | | | | | | ● | | | | |
| 2 | ● | | | ● | | | | | | ● | | | | | ● | | | | |
| 3 | ● | | | ● | | | | | ● | ● | | | | | ● | | | | |
| 4 | ● | | ● | ● | | | | | | | | | | | ● | | | | |
| 5 | ● | | ● | ● | | | | | | | ● | ● | | | ● | | | | |
| 6 | ● | | ● | ● | ● | | | | | | | | | | ● | | | | |
| 7 | ● | | ● | ● | ● | | | | | ● | | | | | ● | | | | |
| 8 | ● | | ● | ● | ● | | | | | ● | | | ● | | ● | | | | |
| 9 | ● | | ● | ● | ● | | | ● | | ● | | | ● | | ● | | | | |
| 10 | ● | | ● | ● | ● | | ● | ● | | ● | | | ● | | ● | | | | |
| 11 | ● | | ● | ● | ● | | ● | ● | | ● | | ● | ● | | ● | | | | |
| 12 | ● | | ● | ● | ● | | ● | ● | | ● | | | | ● | ● | | | | |
| 13 | ● | | ● | ● | ● | | ● | ● | | ● | | ● | | ● | ● | | | | |
| 14 | ● | | ● | ● | ● | | ● | ● | | ● | ● | ● | | ● | ● | | | | |
| 15 | ● | | ● | ● | ● | | | | ● | ● | | | | ● | ● | | | | |
| 16 | ● | | ● | ● | ● | | | | ● | ● | ● | ● | | ● | ● | | | | |
| 17 | ● | | ● | ● | ● | | ● | | ● | ● | ● | ● | | ● | ● | | | | |
| 18 | ● | | ● | ● | ● | | | | ● | ● | | | ● | ● | ● | | | | |
| 19 | ● | | ● | ● | ● | | | ● | ● | ● | | | ● | ● | ● | | | | |
| 20 | ● | | ● | ● | ● | | | ● | ● | ● | | ● | ● | ● | ● | | | | |
| ХП | ● | | ● | ● | ● | | ● | ● | ● | ● | ● | ● | ● | ● | ● | | | | |

Упрощенная схема работы электровоза в режиме без " С " соединении тяговых двигателей

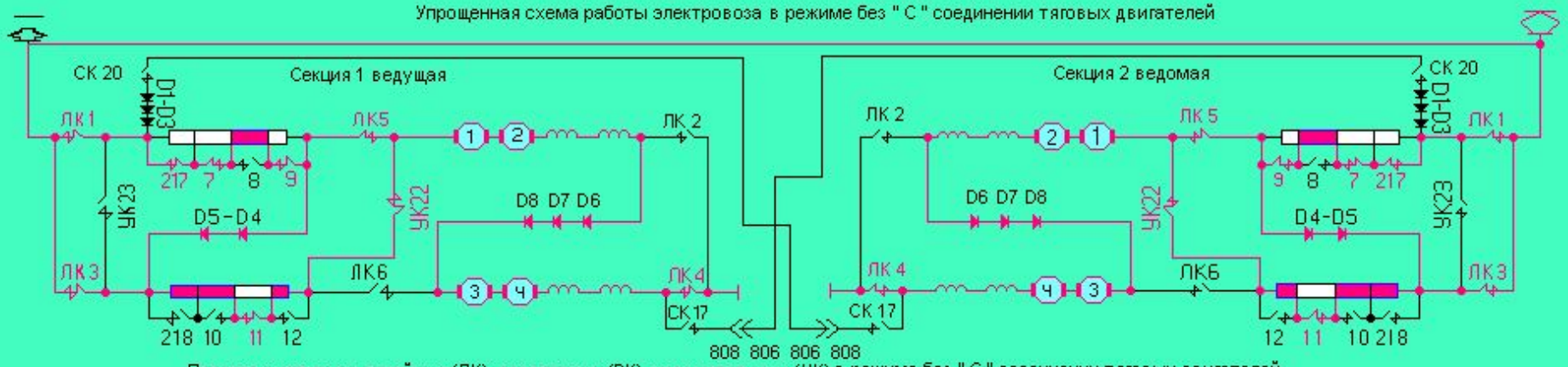


Порядок включения линейных (ЛК), реостатных (РК), уравнительных (УК) в режиме без " С " соединении тяговых двигателей

| № | Линейные (ЛК) | | | | | | Реостатные (РК) | | | | | | | | | | | УК | |
|---|---|---|---|---|---|---|---|---|---|---|---|---|---|---|---|---|---|---|---|
| Поз | 1 | 2 | 3 | 4 | 5 | 6 | 217 | 7 | 8 | 9 | 218 | 10 | 11 | 12 | 22 | 17 | 20 | 23 | 24 |
| 1 | ● | | | ● | | | | | | | | | | | ● | | | | |
| 2 | ● | | | ● | | | | | | ● | | | | | ● | | | | |
| 3 | ● | | | ● | | | | | ● | ● | | | | | ● | | | | |
| 4 | ● | | ● | ● | | | | | | | | | | | ● | | | | |
| 5 | ● | | ● | ● | | | | | | | ● | ● | | | ● | | | | |
| 6 | ● | | ● | ● | ● | | | | | | | | | | ● | | | | |
| 7 | ● | | ● | ● | ● | | | | | ● | | | | | ● | | | | |
| 8 | ● | | ● | ● | ● | | | | | ● | | | ● | | ● | | | | |
| 9 | ● | | ● | ● | ● | | | ● | | ● | | | ● | | ● | | | | |
| 10 | ● | | ● | ● | ● | | ● | ● | | ● | | | ● | | ● | | | | |
| 11 | ● | | ● | ● | ● | | ● | ● | | ● | | ● | ● | | ● | | | | |
| 12 | ● | | ● | ● | ● | | ● | ● | | ● | | | | ● | ● | | | | |
| 13 | ● | | ● | ● | ● | | ● | ● | | ● | | ● | | ● | ● | | | | |
| 14 | ● | | ● | ● | ● | | ● | ● | | ● | ● | ● | | ● | ● | | | | |
| 15 | ● | | ● | ● | ● | | | | ● | ● | | | | ● | ● | | | | |
| 16 | ● | | ● | ● | ● | | | | ● | ● | ● | ● | | ● | ● | | | | |
| 17 | ● | | ● | ● | ● | | ● | | ● | ● | ● | ● | | ● | ● | | | | |
| 18 | ● | | ● | ● | ● | | | | ● | ● | | | ● | ● | ● | | | | |
| 19 | ● | | ● | ● | ● | | | ● | ● | ● | | | ● | ● | ● | | | | |
| 20 | ● | | ● | ● | ● | | | ● | ● | ● | | ● | ● | ● | ● | | | | |
| ХП | ● | | ● | ● | ● | | ● | ● | ● | ● | ● | ● | ● | ● | ● | | | | |

Упрощенная схема работы электровоза в режиме без " С " соединении тяговых двигателей

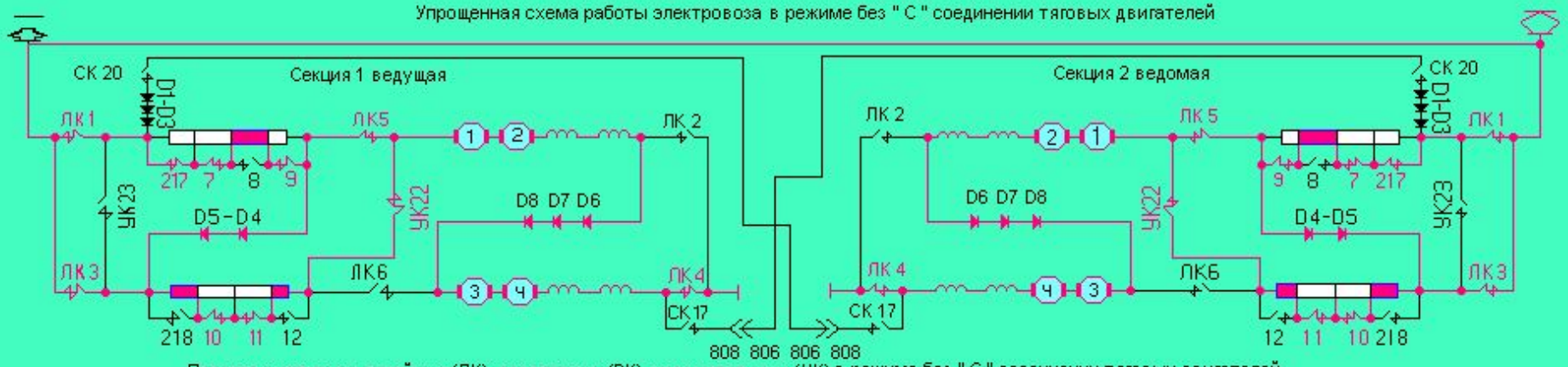


Порядок включения линейных (ЛК), реостатных (РК), уравнительных (УК) в режиме без " С " соединении тяговых двигателей

| № | Линейные (ЛК) | | | | | | Реостатные (РК) | | | | | | | | | | | УК | |
|---|---|---|---|---|---|---|---|---|---|---|---|---|---|---|---|---|---|---|---|
| Поз | 1 | 2 | 3 | 4 | 5 | 6 | 217 | 7 | 8 | 9 | 218 | 10 | 11 | 12 | 22 | 17 | 20 | 23 | 24 |
| 1 | ● | | | ● | | | | | | | | | | | ● | | | | |
| 2 | ● | | | ● | | | | | | ● | | | | | ● | | | | |
| 3 | ● | | | ● | | | | | ● | ● | | | | | ● | | | | |
| 4 | ● | | ● | ● | | | | | | | | | | | ● | | | | |
| 5 | ● | | ● | ● | | | | | | | ● | ● | | | ● | | | | |
| 6 | ● | | ● | ● | ● | | | | | | | | | | ● | | | | |
| 7 | ● | | ● | ● | ● | | | | | ● | | | | | ● | | | | |
| 8 | ● | | ● | ● | ● | | | | | ● | | | ● | | ● | | | | |
| 9 | ● | | ● | ● | ● | | | ● | | ● | | | ● | | ● | | | | |
| 10 | ● | | ● | ● | ● | | ● | ● | | ● | | | ● | | ● | | | | |
| 11 | ● | | ● | ● | ● | | ● | ● | | ● | | ● | ● | | ● | | | | |
| 12 | ● | | ● | ● | ● | | ● | ● | | ● | | | | ● | ● | | | | |
| 13 | ● | | ● | ● | ● | | ● | ● | | ● | | ● | | ● | ● | | | | |
| 14 | ● | | ● | ● | ● | | ● | ● | | ● | ● | ● | | ● | ● | | | | |
| 15 | ● | | ● | ● | ● | | | | ● | ● | | | | ● | ● | | | | |
| 16 | ● | | ● | ● | ● | | | | ● | ● | ● | ● | | ● | ● | | | | |
| 17 | ● | | ● | ● | ● | | ● | | ● | ● | ● | ● | | ● | ● | | | | |
| 18 | ● | | ● | ● | ● | | | | ● | ● | | | ● | ● | ● | | | | |
| 19 | ● | | ● | ● | ● | | | ● | ● | ● | | | ● | ● | ● | | | | |
| 20 | ● | | ● | ● | ● | | | ● | ● | ● | | ● | ● | ● | ● | | | | |
| ХП | ● | | ● | ● | ● | | ● | ● | ● | ● | ● | ● | ● | ● | ● | | | | |

Упрощенная схема работы электровоза в режиме без " С " соединении тяговых двигателей

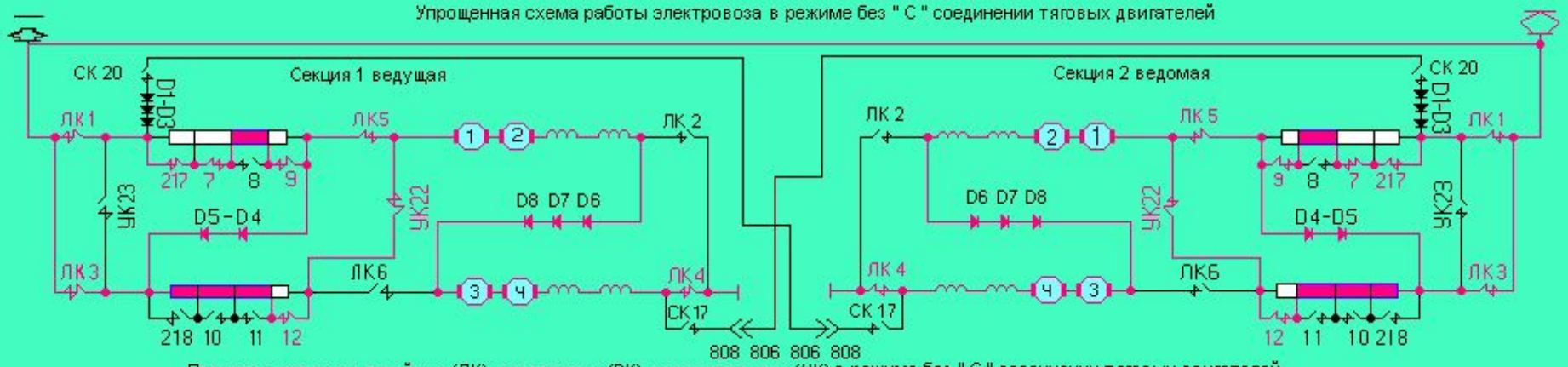


Порядок включения линейных (ЛК), реостатных (РК), уравнительных (УК) в режиме без " С " соединении тяговых двигателей

| № | Линейные (ЛК) | | | | | | Реостатные (РК) | | | | | | | | | | | УК | |
|---|---|---|---|---|---|---|---|---|---|---|---|---|---|---|---|---|---|---|---|
| Поз | 1 | 2 | 3 | 4 | 5 | 6 | 217 | 7 | 8 | 9 | 218 | 10 | 11 | 12 | 22 | 17 | 20 | 23 | 24 |
| 1 | ● | | | ● | | | | | | | | | | | ● | | | | |
| 2 | ● | | | ● | | | | | | ● | | | | | ● | | | | |
| 3 | ● | | | ● | | | | | ● | ● | | | | | ● | | | | |
| 4 | ● | | ● | ● | | | | | | | | | | | ● | | | | |
| 5 | ● | | ● | ● | | | | | | | ● | ● | | | ● | | | | |
| 6 | ● | | ● | ● | ● | | | | | | | | | | ● | | | | |
| 7 | ● | | ● | ● | ● | | | | | ● | | | | | ● | | | | |
| 8 | ● | | ● | ● | ● | | | | | ● | | | ● | | ● | | | | |
| 9 | ● | | ● | ● | ● | | | ● | | ● | | | ● | | ● | | | | |
| 10 | ● | | ● | ● | ● | | ● | ● | | ● | | | ● | | ● | | | | |
| 11 | ● | | ● | ● | ● | | ● | ● | | ● | | ● | ● | | ● | | | | |
| 12 | ● | | ● | ● | ● | | ● | ● | | ● | | | | ● | ● | | | | |
| 13 | ● | | ● | ● | ● | | ● | ● | | ● | | ● | | ● | ● | | | | |
| 14 | ● | | ● | ● | ● | | ● | ● | | ● | ● | ● | | ● | ● | | | | |
| 15 | ● | | ● | ● | ● | | | | ● | ● | | | | ● | ● | | | | |
| 16 | ● | | ● | ● | ● | | | | ● | ● | ● | ● | | ● | ● | | | | |
| 17 | ● | | ● | ● | ● | | ● | | ● | ● | ● | ● | | ● | ● | | | | |
| 18 | ● | | ● | ● | ● | | | | ● | ● | | | ● | ● | ● | | | | |
| 19 | ● | | ● | ● | ● | | | ● | ● | ● | | | ● | ● | ● | | | | |
| 20 | ● | | ● | ● | ● | | | ● | ● | ● | | ● | ● | ● | ● | | | | |
| ХП | ● | | ● | ● | ● | | ● | ● | ● | ● | ● | ● | ● | ● | ● | | | | |

Упрощенная схема работы электровоза в режиме без " С " соединении тяговых двигателей

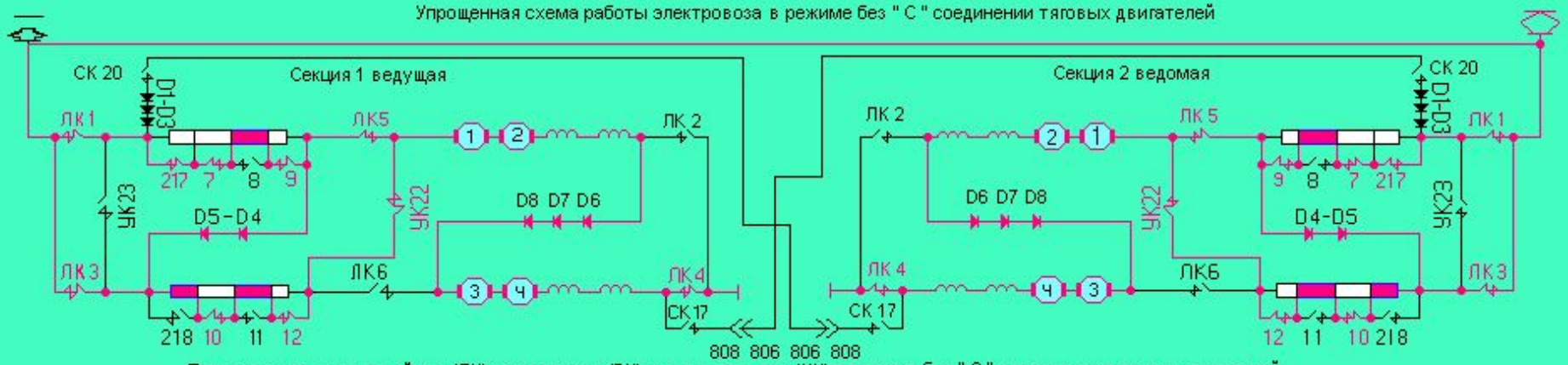


Порядок включения линейных (ЛК), реостатных (РК), уравнительных (УК) в режиме без " С " соединении тяговых двигателей

| № | Линейные (ЛК) | | | | | | Реостатные (РК) | | | | | | | | | | | УК | |
|---|---|---|---|---|---|---|---|---|---|---|---|---|---|---|---|---|---|---|---|
| Поз | 1 | 2 | 3 | 4 | 5 | 6 | 217 | 7 | 8 | 9 | 218 | 10 | 11 | 12 | 22 | 17 | 20 | 23 | 24 |
| 1 | ● | | | ● | | | | | | | | | | | ● | | | | |
| 2 | ● | | | ● | | | | | | ● | | | | | ● | | | | |
| 3 | ● | | | ● | | | | | ● | ● | | | | | ● | | | | |
| 4 | ● | | ● | ● | | | | | | | | | | | ● | | | | |
| 5 | ● | | ● | ● | | | | | | | ● | ● | | | ● | | | | |
| 6 | ● | | ● | ● | ● | | | | | | | | | | ● | | | | |
| 7 | ● | | ● | ● | ● | | | | | ● | | | | | ● | | | | |
| 8 | ● | | ● | ● | ● | | | | | ● | | | ● | | ● | | | | |
| 9 | ● | | ● | ● | ● | | | ● | | ● | | | ● | | ● | | | | |
| 10 | ● | | ● | ● | ● | | ● | ● | | ● | | | ● | | ● | | | | |
| 11 | ● | | ● | ● | ● | | ● | ● | | ● | | ● | ● | | ● | | | | |
| 12 | ● | | ● | ● | ● | | ● | ● | | ● | | | | ● | ● | | | | |
| 13 | ● | | ● | ● | ● | | ● | ● | | ● | | ● | | ● | ● | | | | |
| 14 | ● | | ● | ● | ● | | ● | ● | | ● | ● | ● | | ● | ● | | | | |
| 15 | ● | | ● | ● | ● | | | | ● | ● | | | | ● | ● | | | | |
| 16 | ● | | ● | ● | ● | | | | ● | ● | ● | ● | | ● | ● | | | | |
| 17 | ● | | ● | ● | ● | | ● | | ● | ● | ● | ● | | ● | ● | | | | |
| 18 | ● | | ● | ● | ● | | | | ● | ● | | | ● | ● | ● | | | | |
| 19 | ● | | ● | ● | ● | | | ● | ● | ● | | | ● | ● | ● | | | | |
| 20 | ● | | ● | ● | ● | | | ● | ● | ● | | ● | ● | ● | ● | | | | |
| ХП | ● | | ● | ● | ● | | ● | ● | ● | ● | ● | ● | ● | ● | ● | | | | |

Упрощенная схема работы электровоза в режиме без " С " соединении тяговых двигателей

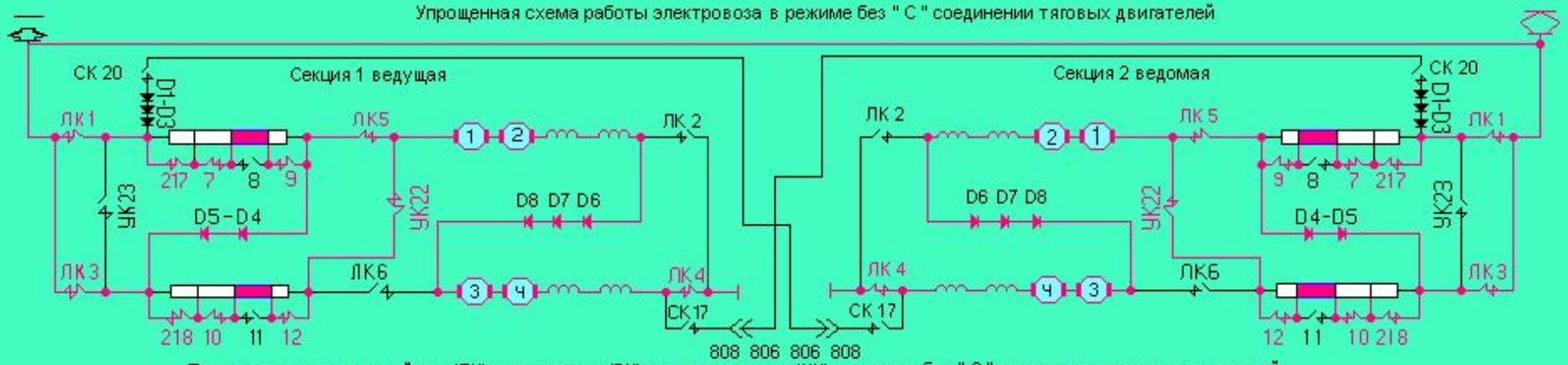


Порядок включения линейных (ЛК), реостатных (РК), уравнительных (УК) в режиме без " С " соединении тяговых двигателей

| № | Линейные (ЛК) | | | | | | Реостатные (РК) | | | | | | | | | | | УК | |
|---|---|---|---|---|---|---|---|---|---|---|---|---|---|---|---|---|---|---|---|
| Поз | 1 | 2 | 3 | 4 | 5 | 6 | 217 | 7 | 8 | 9 | 218 | 10 | 11 | 12 | 22 | 17 | 20 | 23 | 24 |
| 1 | ● | | | ● | | | | | | | | | | | ● | | | | |
| 2 | ● | | | ● | | | | | | ● | | | | | ● | | | | |
| 3 | ● | | | ● | | | | | ● | ● | | | | | ● | | | | |
| 4 | ● | | ● | ● | | | | | | | | | | | ● | | | | |
| 5 | ● | | ● | ● | | | | | | | ● | ● | | | ● | | | | |
| 6 | ● | | ● | ● | ● | | | | | | | | | | ● | | | | |
| 7 | ● | | ● | ● | ● | | | | | ● | | | | | ● | | | | |
| 8 | ● | | ● | ● | ● | | | | | ● | | | ● | | ● | | | | |
| 9 | ● | | ● | ● | ● | | | ● | | ● | | | ● | | ● | | | | |
| 10 | ● | | ● | ● | ● | | ● | ● | | ● | | | ● | | ● | | | | |
| 11 | ● | | ● | ● | ● | | ● | ● | | ● | | ● | ● | | ● | | | | |
| 12 | ● | | ● | ● | ● | | ● | ● | | ● | | | | ● | ● | | | | |
| 13 | ● | | ● | ● | ● | | ● | ● | | ● | | ● | | ● | ● | | | | |
| 14 | ● | | ● | ● | ● | | ● | ● | | ● | ● | ● | | ● | ● | | | | |
| 15 | ● | | ● | ● | ● | | | | ● | ● | | | | ● | ● | | | | |
| 16 | ● | | ● | ● | ● | | | | ● | ● | ● | ● | | ● | ● | | | | |
| 17 | ● | | ● | ● | ● | | ● | | ● | ● | ● | ● | | ● | ● | | | | |
| 18 | ● | | ● | ● | ● | | | | ● | ● | | | ● | ● | ● | | | | |
| 19 | ● | | ● | ● | ● | | | ● | ● | ● | | | ● | ● | ● | | | | |
| 20 | ● | | ● | ● | ● | | | ● | ● | ● | | ● | ● | ● | ● | | | | |
| ХП | ● | | ● | ● | ● | | ● | ● | ● | ● | ● | ● | ● | ● | ● | | | | |

Упрощенная схема работы электровоза в режиме без " С " соединении тяговых двигателей

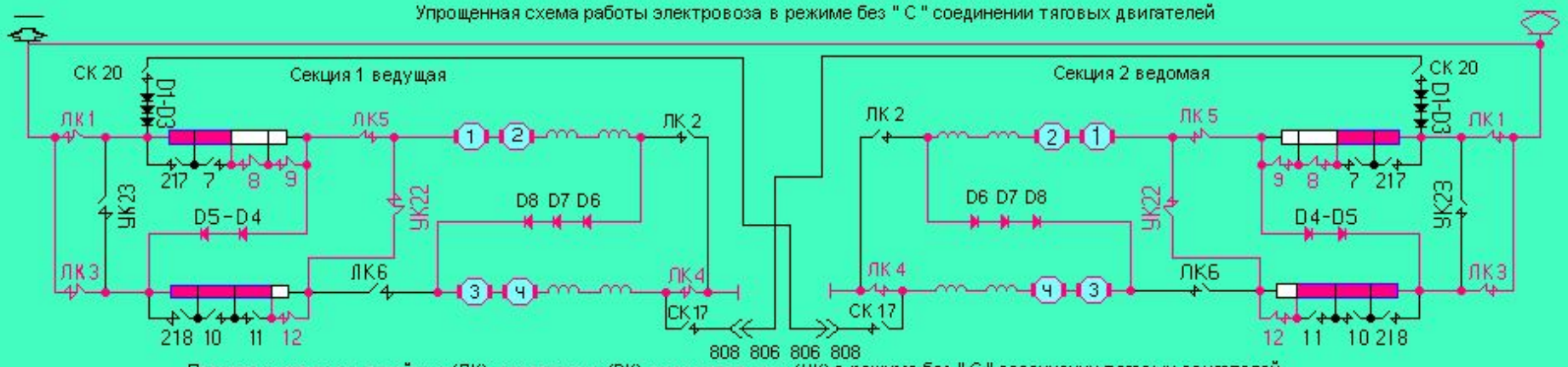


Порядок включения линейных (ЛК), реостатных (РК), уравнительных (УК) в режиме без " С " соединении тяговых двигателей

| № | Линейные (ЛК) | | | | | | Реостатные (РК) | | | | | | | | | | | УК | |
|---|---|---|---|---|---|---|---|---|---|---|---|---|---|---|---|---|---|---|---|
| Поз | 1 | 2 | 3 | 4 | 5 | 6 | 217 | 7 | 8 | 9 | 218 | 10 | 11 | 12 | 22 | 17 | 20 | 23 | 24 |
| 1 | ● | | | ● | | | | | | | | | | | ● | | | | |
| 2 | ● | | | ● | | | | | | ● | | | | | ● | | | | |
| 3 | ● | | | ● | | | | | ● | ● | | | | | ● | | | | |
| 4 | ● | | ● | ● | | | | | | | | | | | ● | | | | |
| 5 | ● | | ● | ● | | | | | | | ● | ● | | | ● | | | | |
| 6 | ● | | ● | ● | ● | | | | | | | | | | ● | | | | |
| 7 | ● | | ● | ● | ● | | | | | ● | | | | | ● | | | | |
| 8 | ● | | ● | ● | ● | | | | | ● | | | ● | | ● | | | | |
| 9 | ● | | ● | ● | ● | | | ● | | ● | | | ● | | ● | | | | |
| 10 | ● | | ● | ● | ● | | ● | ● | | ● | | | ● | | ● | | | | |
| 11 | ● | | ● | ● | ● | | ● | ● | | ● | | ● | ● | | ● | | | | |
| 12 | ● | | ● | ● | ● | | ● | ● | | ● | | | | ● | ● | | | | |
| 13 | ● | | ● | ● | ● | | ● | ● | | ● | | ● | | ● | ● | | | | |
| 14 | ● | | ● | ● | ● | | ● | ● | | ● | ● | ● | | ● | ● | | | | |
| 15 | ● | | ● | ● | ● | | | | ● | ● | | | | ● | ● | | | | |
| 16 | ● | | ● | ● | ● | | | | ● | ● | ● | ● | | ● | ● | | | | |
| 17 | ● | | ● | ● | ● | | ● | | ● | ● | ● | ● | | ● | ● | | | | |
| 18 | ● | | ● | ● | ● | | | | ● | ● | | | ● | ● | ● | | | | |
| 19 | ● | | ● | ● | ● | | | ● | ● | ● | | | ● | ● | ● | | | | |
| 20 | ● | | ● | ● | ● | | | ● | ● | ● | | ● | ● | ● | ● | | | | |
| ХП | ● | | ● | ● | ● | | ● | ● | ● | ● | ● | ● | ● | ● | ● | | | | |

Упрощенная схема работы электровоза в режиме без " С " соединении тяговых двигателей

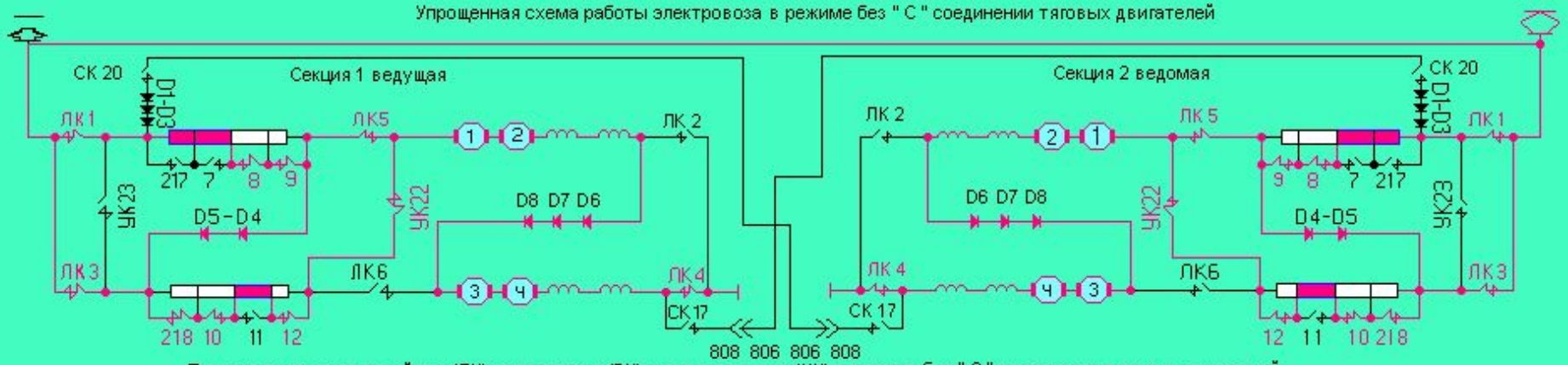


Порядок включения линейных (ЛК), реостатных (РК), уравнительных (УК) в режиме без " С " соединении тяговых двигателей

| № | Линейные (ЛК) | | | | | | Реостатные (РК) | | | | | | | | | | | УК | |
|---|---|---|---|---|---|---|---|---|---|---|---|---|---|---|---|---|---|---|---|
| Поз | 1 | 2 | 3 | 4 | 5 | 6 | 217 | 7 | 8 | 9 | 218 | 10 | 11 | 12 | 22 | 17 | 20 | 23 | 24 |
| 1 | ● | | | ● | | | | | | | | | | | ● | | | | |
| 2 | ● | | | ● | | | | | | ● | | | | | ● | | | | |
| 3 | ● | | | ● | | | | | ● | ● | | | | | ● | | | | |
| 4 | ● | | ● | ● | | | | | | | | | | | ● | | | | |
| 5 | ● | | ● | ● | | | | | | | ● | ● | | | ● | | | | |
| 6 | ● | | ● | ● | ● | | | | | | | | | | ● | | | | |
| 7 | ● | | ● | ● | ● | | | | | ● | | | | | ● | | | | |
| 8 | ● | | ● | ● | ● | | | | | ● | | | ● | | ● | | | | |
| 9 | ● | | ● | ● | ● | | | ● | | ● | | | ● | | ● | | | | |
| 10 | ● | | ● | ● | ● | | ● | ● | | ● | | | ● | | ● | | | | |
| 11 | ● | | ● | ● | ● | | ● | ● | | ● | | ● | ● | | ● | | | | |
| 12 | ● | | ● | ● | ● | | ● | ● | | ● | | | | ● | ● | | | | |
| 13 | ● | | ● | ● | ● | | ● | ● | | ● | | ● | | ● | ● | | | | |
| 14 | ● | | ● | ● | ● | | ● | ● | | ● | ● | ● | | ● | ● | | | | |
| 15 | ● | | ● | ● | ● | | | | ● | ● | | | | ● | ● | | | | |
| 16 | ● | | ● | ● | ● | | | | ● | ● | ● | ● | | ● | ● | | | | |
| 17 | ● | | ● | ● | ● | | ● | | ● | ● | ● | ● | | ● | ● | | | | |
| 18 | ● | | ● | ● | ● | | | | ● | ● | | | ● | ● | ● | | | | |
| 19 | ● | | ● | ● | ● | | | ● | ● | ● | | | ● | ● | ● | | | | |
| 20 | ● | | ● | ● | ● | | | ● | ● | ● | | ● | ● | ● | ● | | | | |
| ХП | ● | | ● | ● | ● | | ● | ● | ● | ● | ● | ● | ● | ● | ● | | | | |

Упрощенная схема работы электровоза в режиме без " С " соединении тяговых двигателей

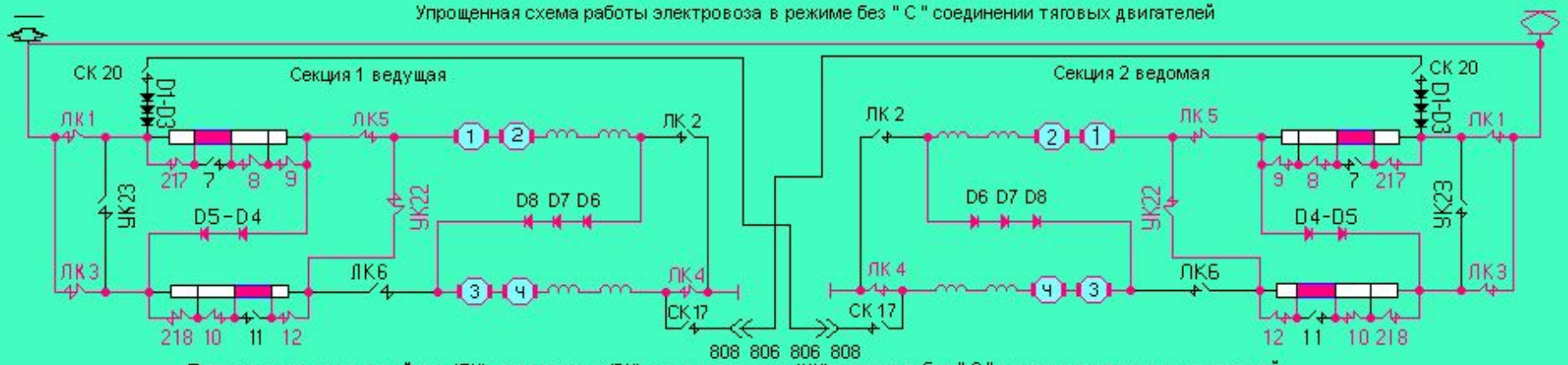


Порядок включения линейных (ЛК), реостатных (РК), уравнительных (УК) в режиме без " С " соединении тяговых двигателей

| № | Линейные (ЛК) | | | | | | Реостатные (РК) | | | | | | | | | | | УК | |
|---|---|---|---|---|---|---|---|---|---|---|---|---|---|---|---|---|---|---|---|
| Поз | 1 | 2 | 3 | 4 | 5 | 6 | 217 | 7 | 8 | 9 | 218 | 10 | 11 | 12 | 22 | 17 | 20 | 23 | 24 |
| 1 | ● | | | ● | | | | | | | | | | | ● | | | | |
| 2 | ● | | | ● | | | | | | ● | | | | | ● | | | | |
| 3 | ● | | | ● | | | | | ● | ● | | | | | ● | | | | |
| 4 | ● | | ● | ● | | | | | | | | | | | ● | | | | |
| 5 | ● | | ● | ● | | | | | | | ● | ● | | | ● | | | | |
| 6 | ● | | ● | ● | ● | | | | | | | | | | ● | | | | |
| 7 | ● | | ● | ● | ● | | | | | ● | | | | | ● | | | | |
| 8 | ● | | ● | ● | ● | | | | | ● | | | ● | | ● | | | | |
| 9 | ● | | ● | ● | ● | | | ● | | ● | | | ● | | ● | | | | |
| 10 | ● | | ● | ● | ● | | ● | ● | | ● | | | ● | | ● | | | | |
| 11 | ● | | ● | ● | ● | | ● | ● | | ● | | ● | ● | | ● | | | | |
| 12 | ● | | ● | ● | ● | | ● | ● | | ● | | | | ● | ● | | | | |
| 13 | ● | | ● | ● | ● | | ● | ● | | ● | | ● | | ● | ● | | | | |
| 14 | ● | | ● | ● | ● | | ● | ● | | ● | ● | ● | | ● | ● | | | | |
| 15 | ● | | ● | ● | ● | | | | ● | ● | | | | ● | ● | | | | |
| 16 | ● | | ● | ● | ● | | | | ● | ● | ● | ● | | ● | ● | | | | |
| 17 | ● | | ● | ● | ● | | ● | | ● | ● | ● | ● | | ● | ● | | | | |
| 18 | ● | | ● | ● | ● | | | | ● | ● | | | ● | ● | ● | | | | |
| 19 | ● | | ● | ● | ● | | | ● | ● | ● | | | ● | ● | ● | | | | |
| 20 | ● | | ● | ● | ● | | | ● | ● | ● | | ● | ● | ● | ● | | | | |
| ХП | ● | | ● | ● | ● | | ● | ● | ● | ● | ● | ● | ● | ● | ● | | | | |

Упрощенная схема работы электровоза в режиме без " С " соединении тяговых двигателей

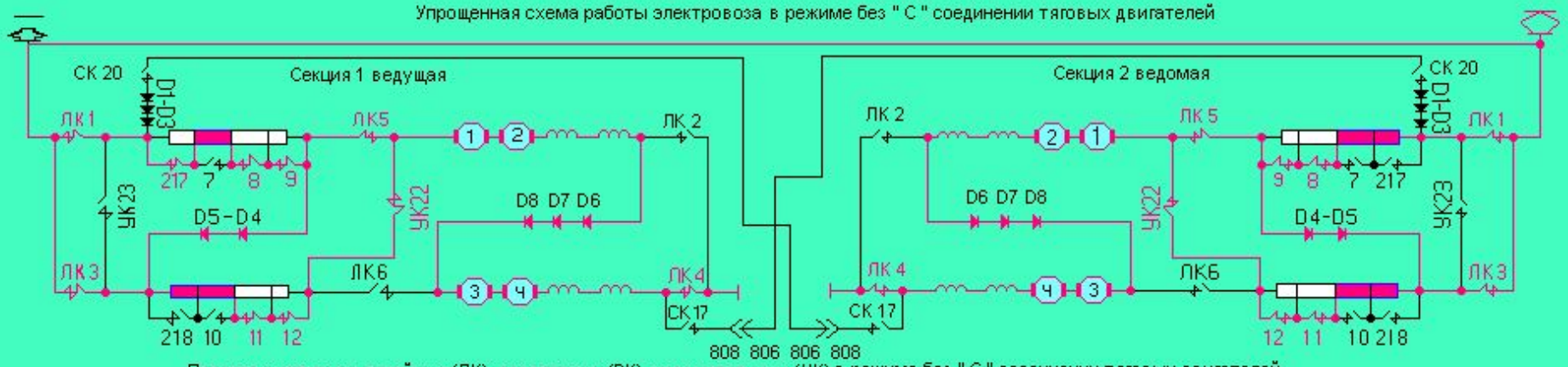


Порядок включения линейных (ЛК), реостатных (РК), уравнительных (УК) в режиме без " С " соединении тяговых двигателей

| № | Линейные (ЛК) | | | | | | Реостатные (РК) | | | | | | | | | | | УК | |
|---|---|---|---|---|---|---|---|---|---|---|---|---|---|---|---|---|---|---|---|
| Поз | 1 | 2 | 3 | 4 | 5 | 6 | 217 | 7 | 8 | 9 | 218 | 10 | 11 | 12 | 22 | 17 | 20 | 23 | 24 |
| 1 | ● | | | ● | | | | | | | | | | | ● | | | | |
| 2 | ● | | | ● | | | | | | ● | | | | | ● | | | | |
| 3 | ● | | | ● | | | | | ● | ● | | | | | ● | | | | |
| 4 | ● | | ● | ● | | | | | | | | | | | ● | | | | |
| 5 | ● | | ● | ● | | | | | | | ● | ● | | | ● | | | | |
| 6 | ● | | ● | ● | ● | | | | | | | | | | ● | | | | |
| 7 | ● | | ● | ● | ● | | | | | ● | | | | | ● | | | | |
| 8 | ● | | ● | ● | ● | | | | | ● | | | ● | | ● | | | | |
| 9 | ● | | ● | ● | ● | | | ● | | ● | | | ● | | ● | | | | |
| 10 | ● | | ● | ● | ● | | ● | ● | | ● | | | ● | | ● | | | | |
| 11 | ● | | ● | ● | ● | | ● | ● | | ● | | ● | ● | | ● | | | | |
| 12 | ● | | ● | ● | ● | | ● | ● | | ● | | | | ● | ● | | | | |
| 13 | ● | | ● | ● | ● | | ● | ● | | ● | | ● | | ● | ● | | | | |
| 14 | ● | | ● | ● | ● | | ● | ● | | ● | ● | ● | | ● | ● | | | | |
| 15 | ● | | ● | ● | ● | | | | ● | ● | | | | ● | ● | | | | |
| 16 | ● | | ● | ● | ● | | | | ● | ● | ● | ● | | ● | ● | | | | |
| 17 | ● | | ● | ● | ● | | ● | | ● | ● | ● | ● | | ● | ● | | | | |
| 18 | ● | | ● | ● | ● | | | | ● | ● | | | ● | ● | ● | | | | |
| 19 | ● | | ● | ● | ● | | | ● | ● | ● | | | ● | ● | ● | | | | |
| 20 | ● | | ● | ● | ● | | | ● | ● | ● | | ● | ● | ● | ● | | | | |
| ХП | ● | | ● | ● | ● | | ● | ● | ● | ● | ● | ● | ● | ● | ● | | | | |

Упрощенная схема работы электровоза в режиме без " С " соединении тяговых двигателей

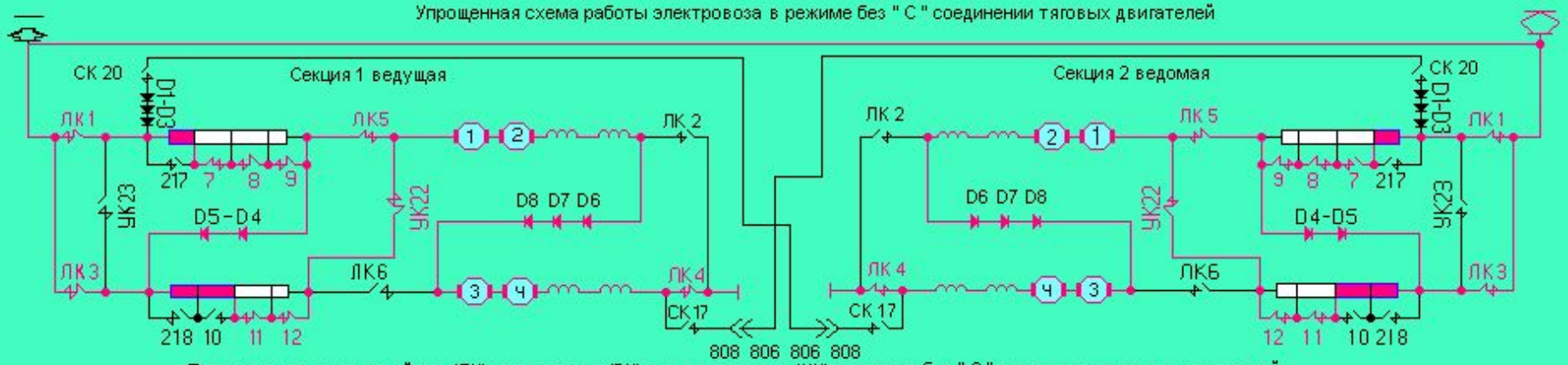


Порядок включения линейных (ЛК), реостатных (РК), уравнительных (УК) в режиме без " С " соединении тяговых двигателей

| № | Линейные (ЛК) | | | | | | Реостатные (РК) | | | | | | | | | | | УК | |
|---|---|---|---|---|---|---|---|---|---|---|---|---|---|---|---|---|---|---|---|
| Поз | 1 | 2 | 3 | 4 | 5 | 6 | 217 | 7 | 8 | 9 | 218 | 10 | 11 | 12 | 22 | 17 | 20 | 23 | 24 |
| 1 | ● | | | ● | | | | | | | | | | | ● | | | | |
| 2 | ● | | | ● | | | | | | ● | | | | | ● | | | | |
| 3 | ● | | | ● | | | | | ● | ● | | | | | ● | | | | |
| 4 | ● | | ● | ● | | | | | | | | | | | ● | | | | |
| 5 | ● | | ● | ● | | | | | | | ● | ● | | | ● | | | | |
| 6 | ● | | ● | ● | ● | | | | | | | | | | ● | | | | |
| 7 | ● | | ● | ● | ● | | | | | ● | | | | | ● | | | | |
| 8 | ● | | ● | ● | ● | | | | | ● | | | ● | | ● | | | | |
| 9 | ● | | ● | ● | ● | | | ● | | ● | | | ● | | ● | | | | |
| 10 | ● | | ● | ● | ● | | ● | ● | | ● | | | ● | | ● | | | | |
| 11 | ● | | ● | ● | ● | | ● | ● | | ● | | ● | ● | | ● | | | | |
| 12 | ● | | ● | ● | ● | | ● | ● | | ● | | | | ● | ● | | | | |
| 13 | ● | | ● | ● | ● | | ● | ● | | ● | | ● | | ● | ● | | | | |
| 14 | ● | | ● | ● | ● | | ● | ● | | ● | ● | ● | | ● | ● | | | | |
| 15 | ● | | ● | ● | ● | | | | ● | ● | | | | ● | ● | | | | |
| 16 | ● | | ● | ● | ● | | | | ● | ● | ● | ● | | ● | ● | | | | |
| 17 | ● | | ● | ● | ● | | ● | | ● | ● | ● | ● | | ● | ● | | | | |
| 18 | ● | | ● | ● | ● | | | | ● | ● | | | ● | ● | ● | | | | |
| 19 | ● | | ● | ● | ● | | | ● | ● | ● | | | ● | ● | ● | | | | |
| 20 | ● | | ● | ● | ● | | | ● | ● | ● | | ● | ● | ● | ● | | | | |
| ХП | ● | | ● | ● | ● | | ● | ● | ● | ● | ● | ● | ● | ● | ● | | | | |

Упрощенная схема работы электровоза в режиме без " С " соединении тяговых двигателей

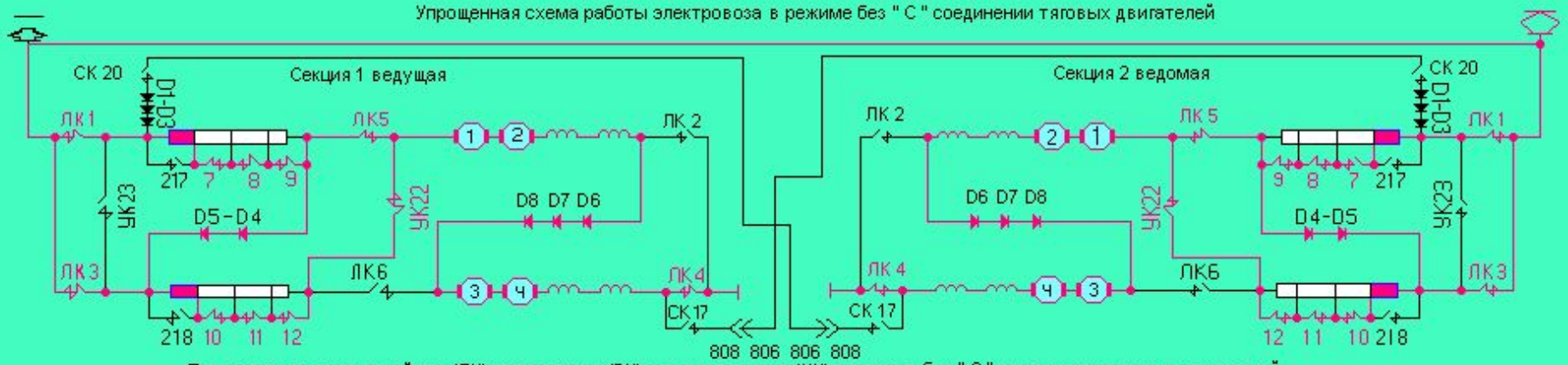


Порядок включения линейных (ЛК), реостатных (РК), уравнительных (УК) в режиме без " С " соединении тяговых двигателей

| № | Линейные (ЛК) | | | | | | Реостатные (РК) | | | | | | | | | | | УК | |
|---|---|---|---|---|---|---|---|---|---|---|---|---|---|---|---|---|---|---|---|
| Поз | 1 | 2 | 3 | 4 | 5 | 6 | 217 | 7 | 8 | 9 | 218 | 10 | 11 | 12 | 22 | 17 | 20 | 23 | 24 |
| 1 | ● | | | ● | | | | | | | | | | | ● | | | | |
| 2 | ● | | | ● | | | | | | ● | | | | | ● | | | | |
| 3 | ● | | | ● | | | | | ● | ● | | | | | ● | | | | |
| 4 | ● | | ● | ● | | | | | | | | | | | ● | | | | |
| 5 | ● | | ● | ● | | | | | | | ● | ● | | | ● | | | | |
| 6 | ● | | ● | ● | ● | | | | | | | | | | ● | | | | |
| 7 | ● | | ● | ● | ● | | | | | ● | | | | | ● | | | | |
| 8 | ● | | ● | ● | ● | | | | | ● | | | ● | | ● | | | | |
| 9 | ● | | ● | ● | ● | | | ● | | ● | | | ● | | ● | | | | |
| 10 | ● | | ● | ● | ● | | ● | ● | | ● | | | ● | | ● | | | | |
| 11 | ● | | ● | ● | ● | | ● | ● | | ● | | ● | ● | | ● | | | | |
| 12 | ● | | ● | ● | ● | | ● | ● | | ● | | | | ● | ● | | | | |
| 13 | ● | | ● | ● | ● | | ● | ● | | ● | | ● | | ● | ● | | | | |
| 14 | ● | | ● | ● | ● | | ● | ● | | ● | ● | ● | | ● | ● | | | | |
| 15 | ● | | ● | ● | ● | | | | ● | ● | | | | ● | ● | | | | |
| 16 | ● | | ● | ● | ● | | | | ● | ● | ● | ● | | ● | ● | | | | |
| 17 | ● | | ● | ● | ● | | ● | | ● | ● | ● | ● | | ● | ● | | | | |
| 18 | ● | | ● | ● | ● | | | | ● | ● | | | ● | ● | ● | | | | |
| 19 | ● | | ● | ● | ● | | | ● | ● | ● | | | ● | ● | ● | | | | |
| 20 | ● | | ● | ● | ● | | | ● | ● | ● | | ● | ● | ● | ● | | | | |
| ХП | ● | | ● | ● | ● | | ● | ● | ● | ● | ● | ● | ● | ● | ● | | | | |

Упрощенная схема работы электровоза в режиме без " С " соединении тяговых двигателей

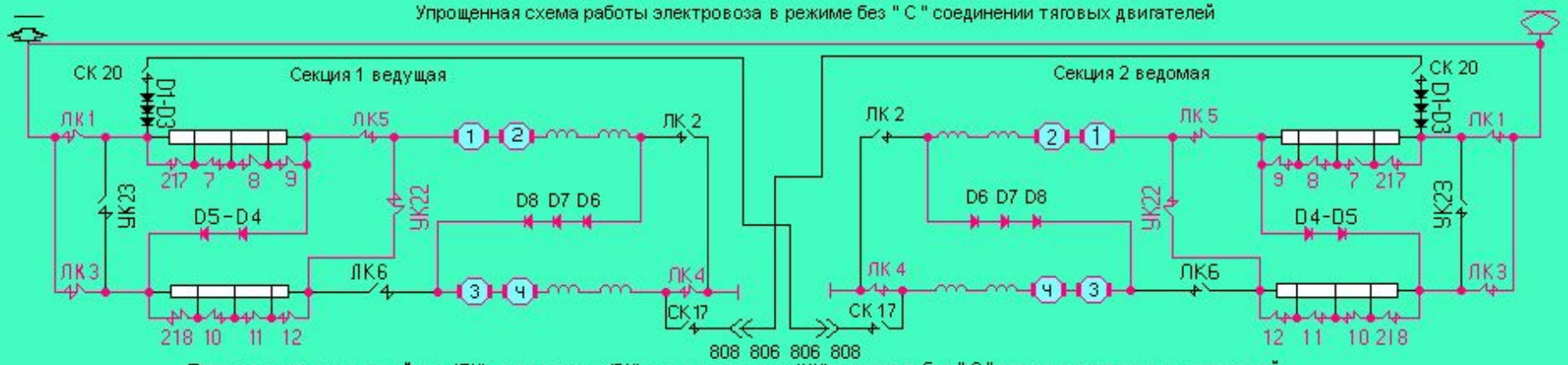


Порядок включения линейных (ЛК), реостатных (РК), уравнительных (УК) в режиме без " С " соединении тяговых двигателей

| № | Линейные (ЛК) | | | | | | Реостатные (РК) | | | | | | | | | | | УК | |
|---|---|---|---|---|---|---|---|---|---|---|---|---|---|---|---|---|---|---|---|
| Поз | 1 | 2 | 3 | 4 | 5 | 6 | 217 | 7 | 8 | 9 | 218 | 10 | 11 | 12 | 22 | 17 | 20 | 23 | 24 |
| 1 | ● | | | ● | | | | | | | | | | | ● | | | | |
| 2 | ● | | | ● | | | | | | ● | | | | | ● | | | | |
| 3 | ● | | | ● | | | | | ● | ● | | | | | ● | | | | |
| 4 | ● | | ● | ● | | | | | | | | | | | ● | | | | |
| 5 | ● | | ● | ● | | | | | | | ● | ● | | | ● | | | | |
| 6 | ● | | ● | ● | ● | | | | | | | | | | ● | | | | |
| 7 | ● | | ● | ● | ● | | | | | ● | | | | | ● | | | | |
| 8 | ● | | ● | ● | ● | | | | | ● | | | ● | | ● | | | | |
| 9 | ● | | ● | ● | ● | | | ● | | ● | | | ● | | ● | | | | |
| 10 | ● | | ● | ● | ● | | ● | ● | | ● | | | ● | | ● | | | | |
| 11 | ● | | ● | ● | ● | | ● | ● | | ● | | ● | ● | | ● | | | | |
| 12 | ● | | ● | ● | ● | | ● | ● | | ● | | | | ● | ● | | | | |
| 13 | ● | | ● | ● | ● | | ● | ● | | ● | | ● | | ● | ● | | | | |
| 14 | ● | | ● | ● | ● | | ● | ● | | ● | ● | ● | | ● | ● | | | | |
| 15 | ● | | ● | ● | ● | | | | ● | ● | | | | ● | ● | | | | |
| 16 | ● | | ● | ● | ● | | | | ● | ● | ● | ● | | ● | ● | | | | |
| 17 | ● | | ● | ● | ● | | ● | | ● | ● | ● | ● | | ● | ● | | | | |
| 18 | ● | | ● | ● | ● | | | | ● | ● | | | ● | ● | ● | | | | |
| 19 | ● | | ● | ● | ● | | | ● | ● | ● | | | ● | ● | ● | | | | |
| 20 | ● | | ● | ● | ● | | | ● | ● | ● | | ● | ● | ● | ● | | | | |
| ХП | ● | | ● | ● | ● | | ● | ● | ● | ● | ● | ● | ● | ● | ● | | | | |

Упрощенная схема работы электровоза на " П " соединении тяговых двигателей

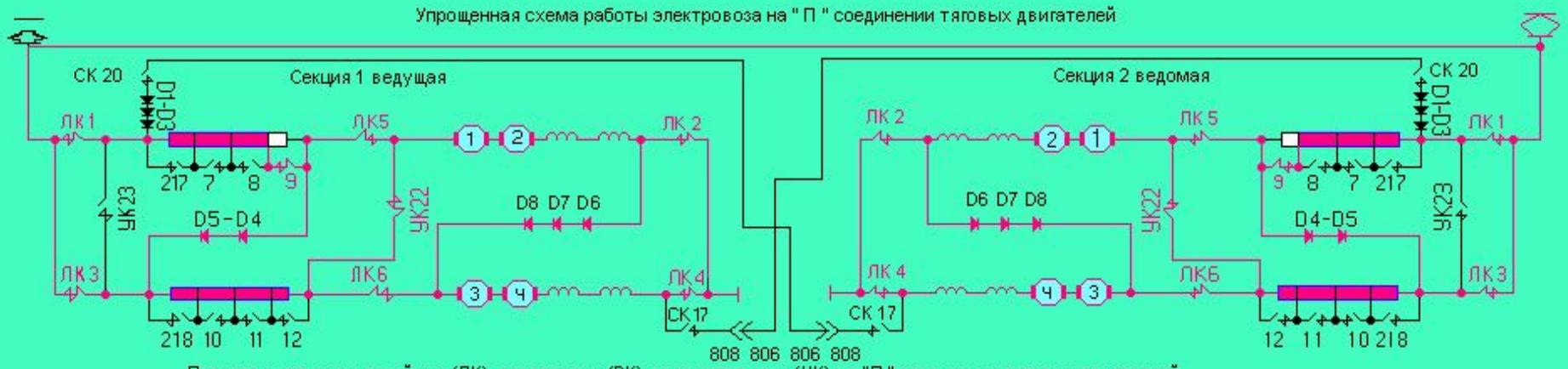


Порядок включения линейных (ЛК), реостатных (РК), уравнительных (УК) на "П" соединении тяговых двигателей

| № | Линейные (ЛК) | | | | | | Реостатные (РК) | | | | | | | | | | | УК | |
|---|---|---|---|---|---|---|---|---|---|---|---|---|---|---|---|---|---|---|---|
| Поз | 1 | 2 | 3 | 4 | 5 | 6 | 217 | 7 | 8 | 9 | 218 | 10 | 11 | 12 | 22 | 17 | 20 | 23 | 24 |
| 1 | ● | ● | ● | ● | ● | ● | | | | ● | | | | | ● | | | | |
| 2 | ● | ● | ● | ● | ● | ● | | | | ● | | | ● | | ● | | | | |
| 3 | ● | ● | ● | ● | ● | ● | | ● | | ● | | | ● | | ● | | | | |
| 4 | ● | ● | ● | ● | ● | ● | ● | ● | | ● | | | ● | | ● | | | | |
| 5 | ● | ● | ● | ● | ● | ● | ● | ● | | ● | | ● | ● | | ● | | | | |
| 6 | ● | ● | ● | ● | ● | ● | ● | ● | | ● | | | | ● | ● | | | | |
| 7 | ● | ● | ● | ● | ● | ● | ● | ● | | ● | | ● | | ● | ● | | | | |
| 8 | ● | ● | ● | ● | ● | ● | ● | ● | | ● | ● | ● | | ● | ● | | | | |
| 9 | ● | ● | ● | ● | ● | ● | | | ● | ● | | | | ● | ● | | | | |
| 10 | ● | ● | ● | ● | ● | ● | | | ● | ● | ● | ● | | ● | ● | | | | |
| 11 | ● | ● | ● | ● | ● | ● | ● | | ● | ● | ● | ● | | ● | ● | | | | |
| 12 | ● | ● | ● | ● | ● | ● | | | ● | ● | | | ● | ● | ● | | | | |
| 13 | ● | ● | ● | ● | ● | ● | | ● | ● | ● | | | ● | ● | ● | | | | |
| 14 | ● | ● | ● | ● | ● | ● | | ● | ● | ● | | ● | ● | ● | ● | | | | |
| ХП | ● | ● | ● | ● | ● | ● | ● | ● | ● | ● | ● | ● | ● | ● | ● | | | | |

Упрощенная схема работы электровоза на " П " соединении тяговых двигателей

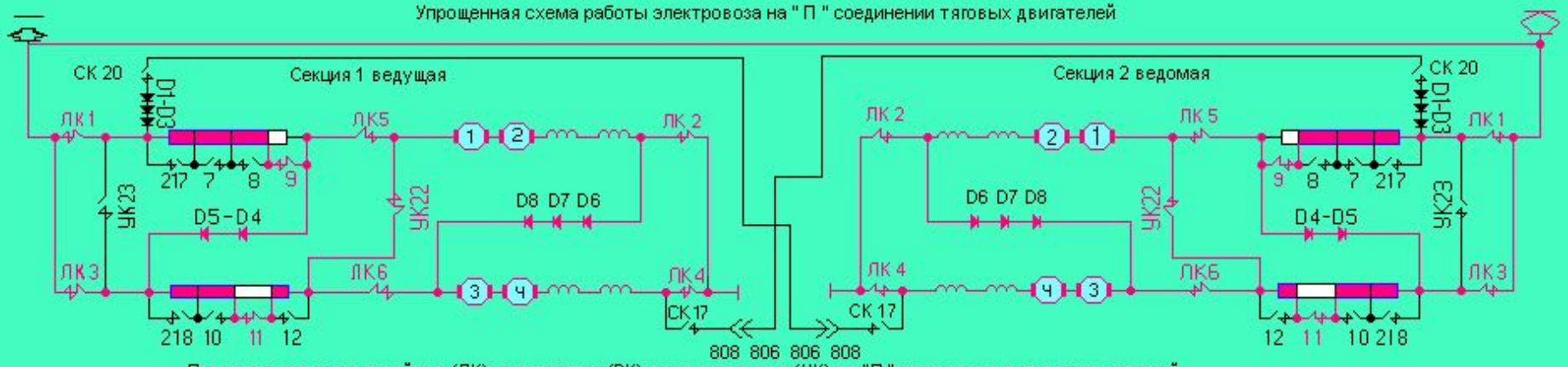


Порядок включения линейных (ЛК), реостатных (РК), уравнительных (УК) на "П" соединении тяговых двигателей

| № | Линейные (ЛК) | | | | | | Реостатные (РК) | | | | | | | | | | | УК | |
|---|---|---|---|---|---|---|---|---|---|---|---|---|---|---|---|---|---|---|---|
| Поз | 1 | 2 | 3 | 4 | 5 | 6 | 217 | 7 | 8 | 9 | 218 | 10 | 11 | 12 | 22 | 17 | 20 | 23 | 24 |
| 1 | ● | ● | ● | ● | ● | ● | | | | ● | | | | | ● | | | | |
| 2 | ● | ● | ● | ● | ● | ● | | | | ● | | | ● | | ● | | | | |
| 3 | ● | ● | ● | ● | ● | ● | | ● | | ● | | | ● | | ● | | | | |
| 4 | ● | ● | ● | ● | ● | ● | ● | ● | | ● | | | ● | | ● | | | | |
| 5 | ● | ● | ● | ● | ● | ● | ● | ● | | ● | | ● | ● | | ● | | | | |
| 6 | ● | ● | ● | ● | ● | ● | ● | ● | | ● | | | | ● | ● | | | | |
| 7 | ● | ● | ● | ● | ● | ● | ● | ● | | ● | | ● | | ● | ● | | | | |
| 8 | ● | ● | ● | ● | ● | ● | ● | ● | | ● | ● | ● | | ● | ● | | | | |
| 9 | ● | ● | ● | ● | ● | ● | | | ● | ● | | | | ● | ● | | | | |
| 10 | ● | ● | ● | ● | ● | ● | | | ● | ● | ● | ● | | ● | ● | | | | |
| 11 | ● | ● | ● | ● | ● | ● | ● | | ● | ● | ● | ● | | ● | ● | | | | |
| 12 | ● | ● | ● | ● | ● | ● | | | ● | ● | | | ● | ● | ● | | | | |
| 13 | ● | ● | ● | ● | ● | ● | | ● | ● | ● | | | ● | ● | ● | | | | |
| 14 | ● | ● | ● | ● | ● | ● | | ● | ● | ● | | ● | ● | ● | ● | | | | |
| ХП | ● | ● | ● | ● | ● | ● | ● | ● | ● | ● | ● | ● | ● | ● | ● | | | | |

Упрощенная схема работы электровоза на " П " соединении тяговых двигателей

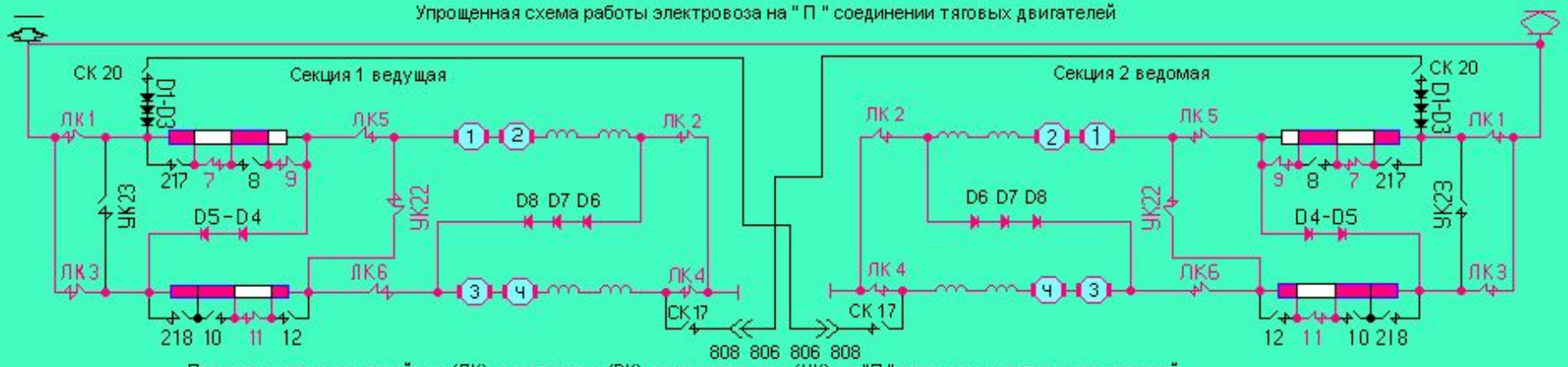


Порядок включения линейных (ЛК), реостатных (РК), уравнительных (УК) на "П" соединении тяговых двигателей

| № | Линейные (ЛК) | | | | | | Реостатные (РК) | | | | | | | | | | | УК | |
|---|---|---|---|---|---|---|---|---|---|---|---|---|---|---|---|---|---|---|---|
| Поз | 1 | 2 | 3 | 4 | 5 | 6 | 217 | 7 | 8 | 9 | 218 | 10 | 11 | 12 | 22 | 17 | 20 | 23 | 24 |
| 1 | ● | ● | ● | ● | ● | ● | | | | ● | | | | | ● | | | | |
| 2 | ● | ● | ● | ● | ● | ● | | | | ● | | | ● | | ● | | | | |
| 3 | ● | ● | ● | ● | ● | ● | | ● | | ● | | | ● | | ● | | | | |
| 4 | ● | ● | ● | ● | ● | ● | ● | ● | | ● | | | ● | | ● | | | | |
| 5 | ● | ● | ● | ● | ● | ● | ● | ● | | ● | | ● | ● | | ● | | | | |
| 6 | ● | ● | ● | ● | ● | ● | ● | ● | | ● | | | | ● | ● | | | | |
| 7 | ● | ● | ● | ● | ● | ● | ● | ● | | ● | | ● | | ● | ● | | | | |
| 8 | ● | ● | ● | ● | ● | ● | ● | ● | | ● | ● | ● | | ● | ● | | | | |
| 9 | ● | ● | ● | ● | ● | ● | | | ● | ● | | | | ● | ● | | | | |
| 10 | ● | ● | ● | ● | ● | ● | | | ● | ● | ● | ● | | ● | ● | | | | |
| 11 | ● | ● | ● | ● | ● | ● | ● | | ● | ● | ● | ● | | ● | ● | | | | |
| 12 | ● | ● | ● | ● | ● | ● | | | ● | ● | | | ● | ● | ● | | | | |
| 13 | ● | ● | ● | ● | ● | ● | | ● | ● | ● | | | ● | ● | ● | | | | |
| 14 | ● | ● | ● | ● | ● | ● | | ● | ● | ● | | ● | ● | ● | ● | | | | |
| ХП | ● | ● | ● | ● | ● | ● | ● | ● | ● | ● | ● | ● | ● | ● | ● | | | | |

Упрощенная схема работы электровоза на " П " соединении тяговых двигателей

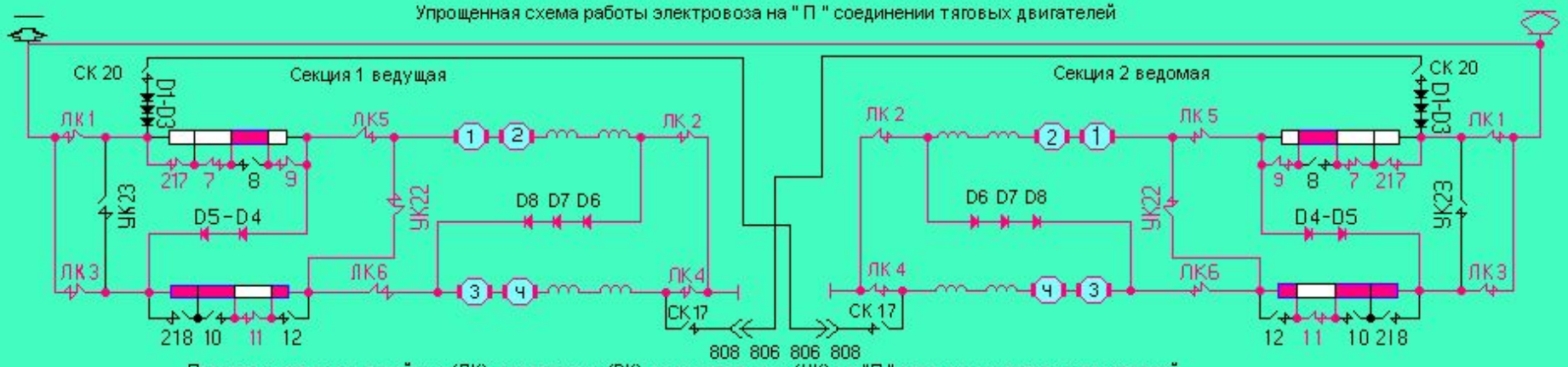


Порядок включения линейных (ЛК), реостатных (РК), уравнительных (УК) на "П" соединении тяговых двигателей

| № | Линейные (ЛК) | | | | | | Реостатные (РК) | | | | | | | | | | | УК | |
|---|---|---|---|---|---|---|---|---|---|---|---|---|---|---|---|---|---|---|---|
| Поз | 1 | 2 | 3 | 4 | 5 | 6 | 217 | 7 | 8 | 9 | 218 | 10 | 11 | 12 | 22 | 17 | 20 | 23 | 24 |
| 1 | ● | ● | ● | ● | ● | ● | | | | ● | | | | | ● | | | | |
| 2 | ● | ● | ● | ● | ● | ● | | | | ● | | | ● | | ● | | | | |
| 3 | ● | ● | ● | ● | ● | ● | | ● | | ● | | | ● | | ● | | | | |
| 4 | ● | ● | ● | ● | ● | ● | ● | ● | | ● | | | ● | | ● | | | | |
| 5 | ● | ● | ● | ● | ● | ● | ● | ● | | ● | | ● | ● | | ● | | | | |
| 6 | ● | ● | ● | ● | ● | ● | ● | ● | | ● | | | | ● | ● | | | | |
| 7 | ● | ● | ● | ● | ● | ● | ● | ● | | ● | | ● | | ● | ● | | | | |
| 8 | ● | ● | ● | ● | ● | ● | ● | ● | | ● | ● | ● | | ● | ● | | | | |
| 9 | ● | ● | ● | ● | ● | ● | | | ● | ● | | | | ● | ● | | | | |
| 10 | ● | ● | ● | ● | ● | ● | | | ● | ● | ● | ● | | ● | ● | | | | |
| 11 | ● | ● | ● | ● | ● | ● | ● | | ● | ● | ● | ● | | ● | ● | | | | |
| 12 | ● | ● | ● | ● | ● | ● | | | ● | ● | | | ● | ● | ● | | | | |
| 13 | ● | ● | ● | ● | ● | ● | | ● | ● | ● | | | ● | ● | ● | | | | |
| 14 | ● | ● | ● | ● | ● | ● | | ● | ● | ● | | ● | ● | ● | ● | | | | |
| ХП | ● | ● | ● | ● | ● | ● | ● | ● | ● | ● | ● | ● | ● | ● | ● | | | | |

Упрощенная схема работы электровоза на " П " соединении тяговых двигателей

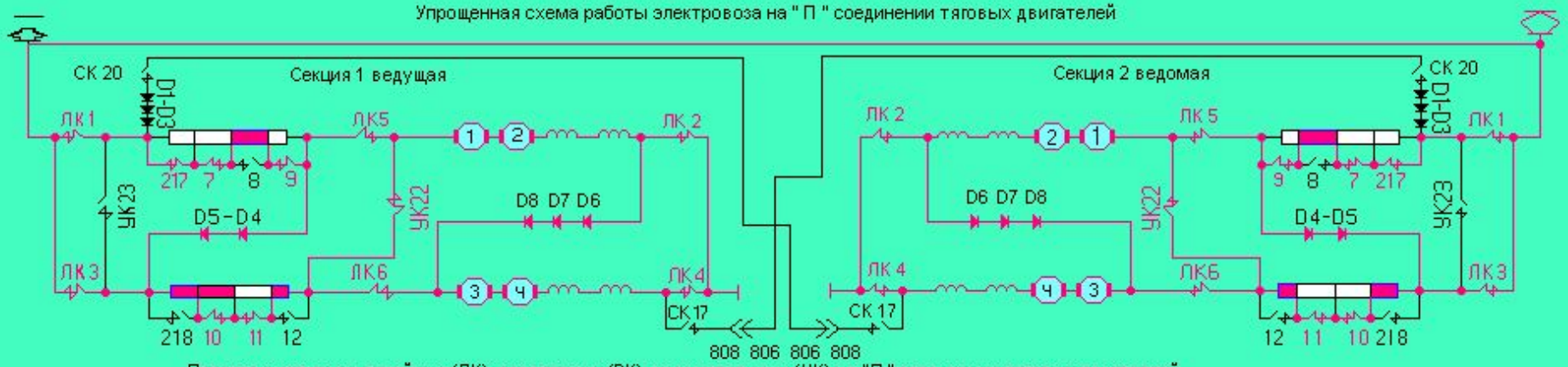


Порядок включения линейных (ЛК), реостатных (РК), уравнительных (УК) на "П" соединении тяговых двигателей

| № | Линейные (ЛК) | | | | | | Реостатные (РК) | | | | | | | | | | | УК | |
|---|---|---|---|---|---|---|---|---|---|---|---|---|---|---|---|---|---|---|---|
| Поз | 1 | 2 | 3 | 4 | 5 | 6 | 217 | 7 | 8 | 9 | 218 | 10 | 11 | 12 | 22 | 17 | 20 | 23 | 24 |
| 1 | ● | ● | ● | ● | ● | ● | | | | ● | | | | | ● | | | | |
| 2 | ● | ● | ● | ● | ● | ● | | | | ● | | | ● | | ● | | | | |
| 3 | ● | ● | ● | ● | ● | ● | | ● | | ● | | | ● | | ● | | | | |
| 4 | ● | ● | ● | ● | ● | ● | ● | ● | | ● | | | ● | | ● | | | | |
| 5 | ● | ● | ● | ● | ● | ● | ● | ● | | ● | | ● | ● | | ● | | | | |
| 6 | ● | ● | ● | ● | ● | ● | ● | ● | | ● | | | | ● | ● | | | | |
| 7 | ● | ● | ● | ● | ● | ● | ● | ● | | ● | | ● | | ● | ● | | | | |
| 8 | ● | ● | ● | ● | ● | ● | ● | ● | | ● | ● | ● | | ● | ● | | | | |
| 9 | ● | ● | ● | ● | ● | ● | | | ● | ● | | | | ● | ● | | | | |
| 10 | ● | ● | ● | ● | ● | ● | | | ● | ● | ● | ● | | ● | ● | | | | |
| 11 | ● | ● | ● | ● | ● | ● | ● | | ● | ● | ● | ● | | ● | ● | | | | |
| 12 | ● | ● | ● | ● | ● | ● | | | ● | ● | | | ● | ● | ● | | | | |
| 13 | ● | ● | ● | ● | ● | ● | | ● | ● | ● | | | ● | ● | ● | | | | |
| 14 | ● | ● | ● | ● | ● | ● | | ● | ● | ● | | ● | ● | ● | ● | | | | |
| ХП | ● | ● | ● | ● | ● | ● | ● | ● | ● | ● | ● | ● | ● | ● | ● | | | | |

Упрощенная схема работы электровоза на " П " соединении тяговых двигателей

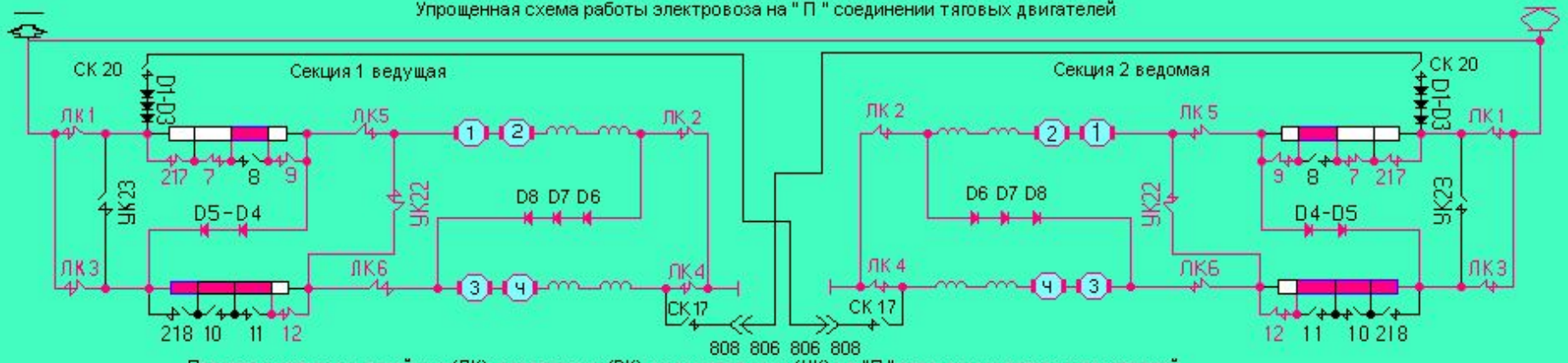


Порядок включения линейных (ЛК), реостатных (РК), уравнительных (УК) на "П" соединении тяговых двигателей

| № | Линейные (ЛК) | | | | | | Реостатные (РК) | | | | | | | | | | | УК | |
|---|---|---|---|---|---|---|---|---|---|---|---|---|---|---|---|---|---|---|---|
| Поз | 1 | 2 | 3 | 4 | 5 | 6 | 217 | 7 | 8 | 9 | 218 | 10 | 11 | 12 | 22 | 17 | 20 | 23 | 24 |
| 1 | ● | ● | ● | ● | ● | ● | | | | ● | | | | | ● | | | | |
| 2 | ● | ● | ● | ● | ● | ● | | | | ● | | | ● | | ● | | | | |
| 3 | ● | ● | ● | ● | ● | ● | | ● | | ● | | | ● | | ● | | | | |
| 4 | ● | ● | ● | ● | ● | ● | ● | ● | | ● | | | ● | | ● | | | | |
| 5 | ● | ● | ● | ● | ● | ● | ● | ● | | ● | | ● | ● | | ● | | | | |
| 6 | ● | ● | ● | ● | ● | ● | ● | ● | | ● | | | | ● | ● | | | | |
| 7 | ● | ● | ● | ● | ● | ● | ● | ● | | ● | | ● | | ● | ● | | | | |
| 8 | ● | ● | ● | ● | ● | ● | ● | ● | | ● | ● | ● | | ● | ● | | | | |
| 9 | ● | ● | ● | ● | ● | ● | | | ● | ● | | | | ● | ● | | | | |
| 10 | ● | ● | ● | ● | ● | ● | | | ● | ● | ● | ● | | ● | ● | | | | |
| 11 | ● | ● | ● | ● | ● | ● | ● | | ● | ● | ● | ● | | ● | ● | | | | |
| 12 | ● | ● | ● | ● | ● | ● | | | ● | ● | | | ● | ● | ● | | | | |
| 13 | ● | ● | ● | ● | ● | ● | | ● | ● | ● | | | ● | ● | ● | | | | |
| 14 | ● | ● | ● | ● | ● | ● | | ● | ● | ● | | ● | ● | ● | ● | | | | |
| ХП | ● | ● | ● | ● | ● | ● | ● | ● | ● | ● | ● | ● | ● | ● | ● | | | | |

Упрощенная схема работы электровоза на " П " соединении тяговых двигателей

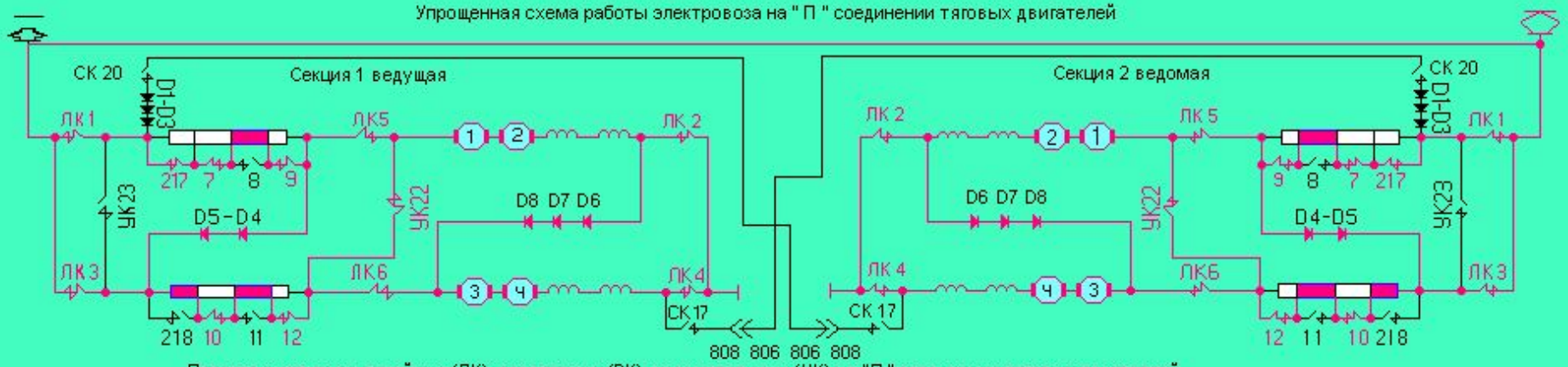


Порядок включения линейных (ЛК), реостатных (РК), уравнительных (УК) на "П" соединении тяговых двигателей

| № | Линейные (ЛК) | | | | | | Реостатные (РК) | | | | | | | | | | | УК | |
|---|---|---|---|---|---|---|---|---|---|---|---|---|---|---|---|---|---|---|---|
| Поз | 1 | 2 | 3 | 4 | 5 | 6 | 217 | 7 | 8 | 9 | 218 | 10 | 11 | 12 | 22 | 17 | 20 | 23 | 24 |
| 1 | ● | ● | ● | ● | ● | ● | | | | ● | | | | | ● | | | | |
| 2 | ● | ● | ● | ● | ● | ● | | | | ● | | | ● | | ● | | | | |
| 3 | ● | ● | ● | ● | ● | ● | | ● | | ● | | | ● | | ● | | | | |
| 4 | ● | ● | ● | ● | ● | ● | ● | ● | | ● | | | ● | | ● | | | | |
| 5 | ● | ● | ● | ● | ● | ● | ● | ● | | ● | | ● | ● | | ● | | | | |
| 6 | ● | ● | ● | ● | ● | ● | ● | ● | | ● | | | | ● | ● | | | | |
| 7 | ● | ● | ● | ● | ● | ● | ● | ● | | ● | | ● | | ● | ● | | | | |
| 8 | ● | ● | ● | ● | ● | ● | ● | ● | | ● | ● | ● | | ● | ● | | | | |
| 9 | ● | ● | ● | ● | ● | ● | | | ● | ● | | | | ● | ● | | | | |
| 10 | ● | ● | ● | ● | ● | ● | | | ● | ● | ● | ● | | ● | ● | | | | |
| 11 | ● | ● | ● | ● | ● | ● | ● | | ● | ● | ● | ● | | ● | ● | | | | |
| 12 | ● | ● | ● | ● | ● | ● | | | ● | ● | | | ● | ● | ● | | | | |
| 13 | ● | ● | ● | ● | ● | ● | | ● | ● | ● | | | ● | ● | ● | | | | |
| 14 | ● | ● | ● | ● | ● | ● | | ● | ● | ● | | ● | ● | ● | ● | | | | |
| ХП | ● | ● | ● | ● | ● | ● | ● | ● | ● | ● | ● | ● | ● | ● | ● | | | | |

Упрощенная схема работы электровоза на " П " соединении тяговых двигателей

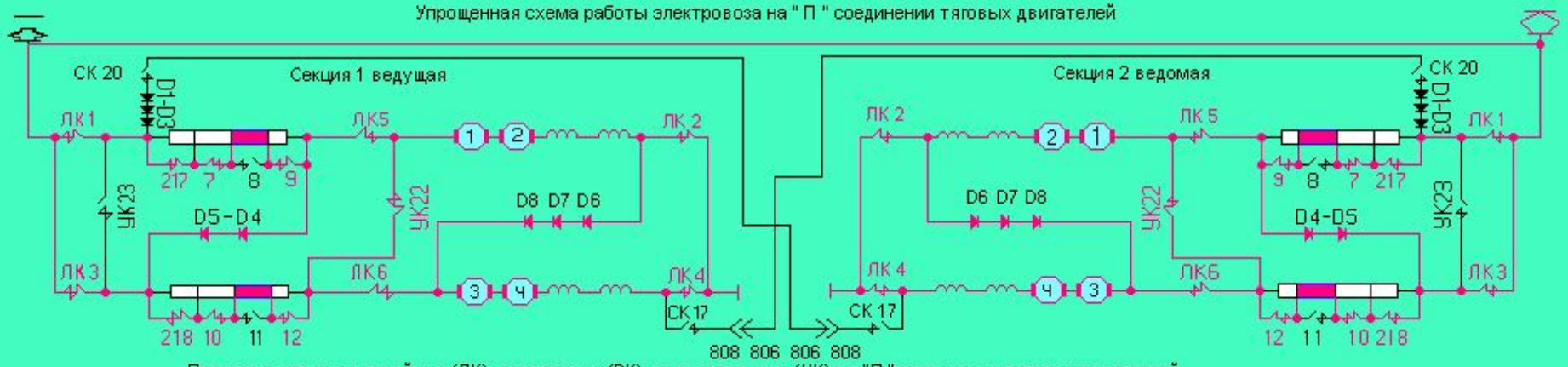


Порядок включения линейных (ЛК), реостатных (РК), уравнительных (УК) на "П" соединении тяговых двигателей

| № | Линейные (ЛК) | | | | | | Реостатные (РК) | | | | | | | | | | | УК | |
|---|---|---|---|---|---|---|---|---|---|---|---|---|---|---|---|---|---|---|---|
| Поз | 1 | 2 | 3 | 4 | 5 | 6 | 217 | 7 | 8 | 9 | 218 | 10 | 11 | 12 | 22 | 17 | 20 | 23 | 24 |
| 1 | ● | ● | ● | ● | ● | ● | | | | ● | | | | | ● | | | | |
| 2 | ● | ● | ● | ● | ● | ● | | | | ● | | | ● | | ● | | | | |
| 3 | ● | ● | ● | ● | ● | ● | | ● | | ● | | | ● | | ● | | | | |
| 4 | ● | ● | ● | ● | ● | ● | ● | ● | | ● | | | ● | | ● | | | | |
| 5 | ● | ● | ● | ● | ● | ● | ● | ● | | ● | | ● | ● | | ● | | | | |
| 6 | ● | ● | ● | ● | ● | ● | ● | ● | | ● | | | | ● | ● | | | | |
| 7 | ● | ● | ● | ● | ● | ● | ● | ● | | ● | | ● | | ● | ● | | | | |
| 8 | ● | ● | ● | ● | ● | ● | ● | ● | | ● | ● | ● | | ● | ● | | | | |
| 9 | ● | ● | ● | ● | ● | ● | | | ● | ● | | | | ● | ● | | | | |
| 10 | ● | ● | ● | ● | ● | ● | | | ● | ● | ● | ● | | ● | ● | | | | |
| 11 | ● | ● | ● | ● | ● | ● | ● | | ● | ● | ● | ● | | ● | ● | | | | |
| 12 | ● | ● | ● | ● | ● | ● | | | ● | ● | | | ● | ● | ● | | | | |
| 13 | ● | ● | ● | ● | ● | ● | | ● | ● | ● | | | ● | ● | ● | | | | |
| 14 | ● | ● | ● | ● | ● | ● | | ● | ● | ● | | ● | ● | ● | ● | | | | |
| ХП | ● | ● | ● | ● | ● | ● | ● | ● | ● | ● | ● | ● | ● | ● | ● | | | | |

Упрощенная схема работы электровоза на " П " соединении тяговых двигателей

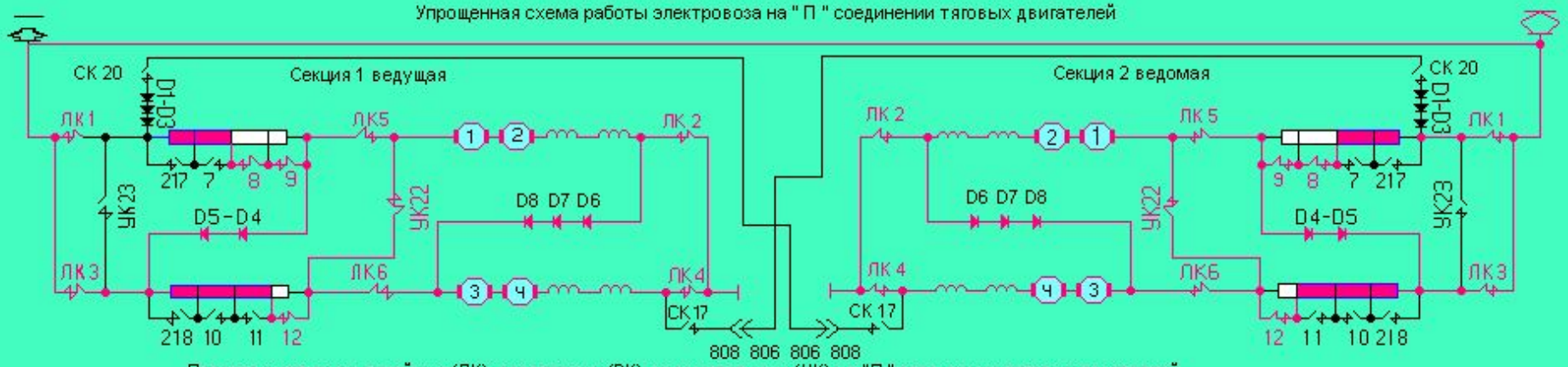


Порядок включения линейных (ЛК), реостатных (РК), уравнительных (УК) на "П" соединении тяговых двигателей

| № | Линейные (ЛК) | | | | | | Реостатные (РК) | | | | | | | | | | | УК | |
|---|---|---|---|---|---|---|---|---|---|---|---|---|---|---|---|---|---|---|---|
| Поз | 1 | 2 | 3 | 4 | 5 | 6 | 217 | 7 | 8 | 9 | 218 | 10 | 11 | 12 | 22 | 17 | 20 | 23 | 24 |
| 1 | ● | ● | ● | ● | ● | ● | | | | ● | | | | | ● | | | | |
| 2 | ● | ● | ● | ● | ● | ● | | | | ● | | | ● | | ● | | | | |
| 3 | ● | ● | ● | ● | ● | ● | | ● | | ● | | | ● | | ● | | | | |
| 4 | ● | ● | ● | ● | ● | ● | ● | ● | | ● | | | ● | | ● | | | | |
| 5 | ● | ● | ● | ● | ● | ● | ● | ● | | ● | | ● | ● | | ● | | | | |
| 6 | ● | ● | ● | ● | ● | ● | ● | ● | | ● | | | | ● | ● | | | | |
| 7 | ● | ● | ● | ● | ● | ● | ● | ● | | ● | | ● | | ● | ● | | | | |
| 8 | ● | ● | ● | ● | ● | ● | ● | ● | | ● | ● | ● | | ● | ● | | | | |
| 9 | ● | ● | ● | ● | ● | ● | | | ● | ● | | | | ● | ● | | | | |
| 10 | ● | ● | ● | ● | ● | ● | | | ● | ● | ● | ● | | ● | ● | | | | |
| 11 | ● | ● | ● | ● | ● | ● | ● | | ● | ● | ● | ● | | ● | ● | | | | |
| 12 | ● | ● | ● | ● | ● | ● | | | ● | ● | | | ● | ● | ● | | | | |
| 13 | ● | ● | ● | ● | ● | ● | | ● | ● | ● | | | ● | ● | ● | | | | |
| 14 | ● | ● | ● | ● | ● | ● | | ● | ● | ● | | ● | ● | ● | ● | | | | |
| ХП | ● | ● | ● | ● | ● | ● | ● | ● | ● | ● | ● | ● | ● | ● | ● | | | | |

Упрощенная схема работы электровоза на " П " соединении тяговых двигателей

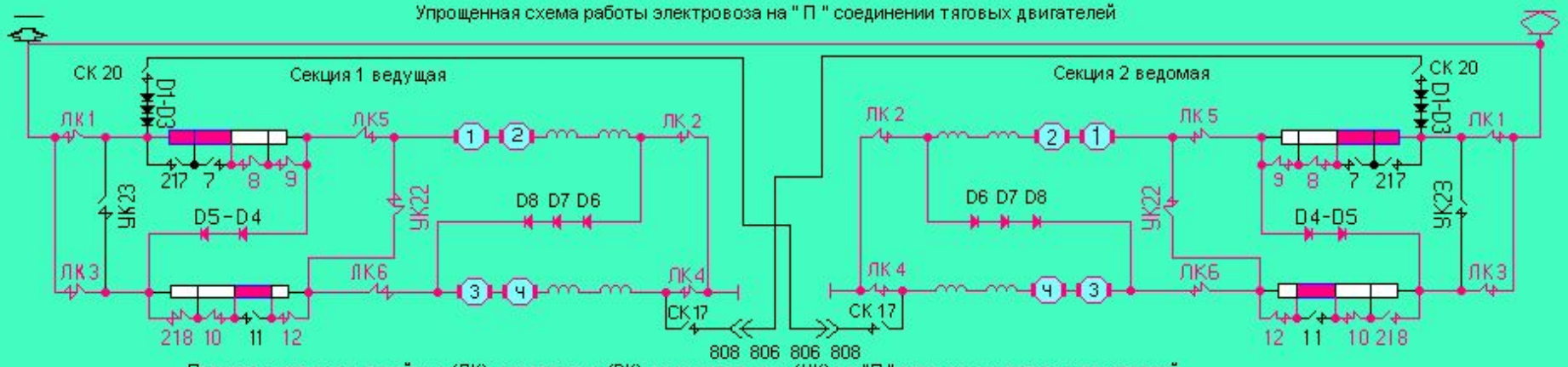


Порядок включения линейных (ЛК), реостатных (РК), уравнительных (УК) на "П" соединении тяговых двигателей

| № | Линейные (ЛК) | | | | | | Реостатные (РК) | | | | | | | | | | | УК | |
|---|---|---|---|---|---|---|---|---|---|---|---|---|---|---|---|---|---|---|---|
| Поз | 1 | 2 | 3 | 4 | 5 | 6 | 217 | 7 | 8 | 9 | 218 | 10 | 11 | 12 | 22 | 17 | 20 | 23 | 24 |
| 1 | ● | ● | ● | ● | ● | ● | | | | ● | | | | | ● | | | | |
| 2 | ● | ● | ● | ● | ● | ● | | | | ● | | | ● | | ● | | | | |
| 3 | ● | ● | ● | ● | ● | ● | | ● | | ● | | | ● | | ● | | | | |
| 4 | ● | ● | ● | ● | ● | ● | ● | ● | | ● | | | ● | | ● | | | | |
| 5 | ● | ● | ● | ● | ● | ● | ● | ● | | ● | | ● | ● | | ● | | | | |
| 6 | ● | ● | ● | ● | ● | ● | ● | ● | | ● | | | | ● | ● | | | | |
| 7 | ● | ● | ● | ● | ● | ● | ● | ● | | ● | | ● | | ● | ● | | | | |
| 8 | ● | ● | ● | ● | ● | ● | ● | ● | | ● | ● | ● | | ● | ● | | | | |
| 9 | ● | ● | ● | ● | ● | ● | | | ● | ● | | | | ● | ● | | | | |
| 10 | ● | ● | ● | ● | ● | ● | | | ● | ● | ● | ● | | ● | ● | | | | |
| 11 | ● | ● | ● | ● | ● | ● | ● | | ● | ● | ● | ● | | ● | ● | | | | |
| 12 | ● | ● | ● | ● | ● | ● | | | ● | ● | | | ● | ● | ● | | | | |
| 13 | ● | ● | ● | ● | ● | ● | | ● | ● | ● | | | ● | ● | ● | | | | |
| 14 | ● | ● | ● | ● | ● | ● | | ● | ● | ● | | ● | ● | ● | ● | | | | |
| ХП | ● | ● | ● | ● | ● | ● | ● | ● | ● | ● | ● | ● | ● | ● | ● | | | | |

Упрощенная схема работы электровоза на " П " соединении тяговых двигателей

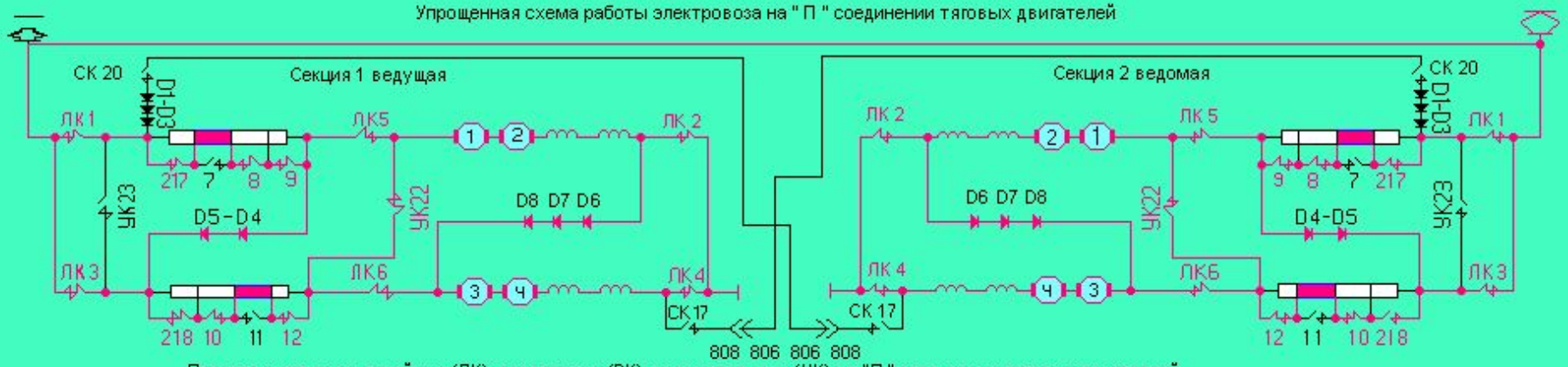


Порядок включения линейных (ЛК), реостатных (РК), уравнительных (УК) на "П" соединении тяговых двигателей

| № | Линейные (ЛК) | | | | | | Реостатные (РК) | | | | | | | | | | | УК | |
|---|---|---|---|---|---|---|---|---|---|---|---|---|---|---|---|---|---|---|---|
| Поз | 1 | 2 | 3 | 4 | 5 | 6 | 217 | 7 | 8 | 9 | 218 | 10 | 11 | 12 | 22 | 17 | 20 | 23 | 24 |
| 1 | ● | ● | ● | ● | ● | ● | | | | ● | | | | | ● | | | | |
| 2 | ● | ● | ● | ● | ● | ● | | | | ● | | | ● | | ● | | | | |
| 3 | ● | ● | ● | ● | ● | ● | | ● | | ● | | | ● | | ● | | | | |
| 4 | ● | ● | ● | ● | ● | ● | ● | ● | | ● | | | ● | | ● | | | | |
| 5 | ● | ● | ● | ● | ● | ● | ● | ● | | ● | | ● | ● | | ● | | | | |
| 6 | ● | ● | ● | ● | ● | ● | ● | ● | | ● | | | | ● | ● | | | | |
| 7 | ● | ● | ● | ● | ● | ● | ● | ● | | ● | | ● | | ● | ● | | | | |
| 8 | ● | ● | ● | ● | ● | ● | ● | ● | | ● | ● | ● | | ● | ● | | | | |
| 9 | ● | ● | ● | ● | ● | ● | | | ● | ● | | | | ● | ● | | | | |
| 10 | ● | ● | ● | ● | ● | ● | | | ● | ● | ● | ● | | ● | ● | | | | |
| 11 | ● | ● | ● | ● | ● | ● | ● | | ● | ● | ● | ● | | ● | ● | | | | |
| 12 | ● | ● | ● | ● | ● | ● | | | ● | ● | | | ● | ● | ● | | | | |
| 13 | ● | ● | ● | ● | ● | ● | | ● | ● | ● | | | ● | ● | ● | | | | |
| 14 | ● | ● | ● | ● | ● | ● | | ● | ● | ● | | ● | ● | ● | ● | | | | |
| ХП | ● | ● | ● | ● | ● | ● | ● | ● | ● | ● | ● | ● | ● | ● | ● | | | | |

Упрощенная схема работы электровоза на " П " соединении тяговых двигателей

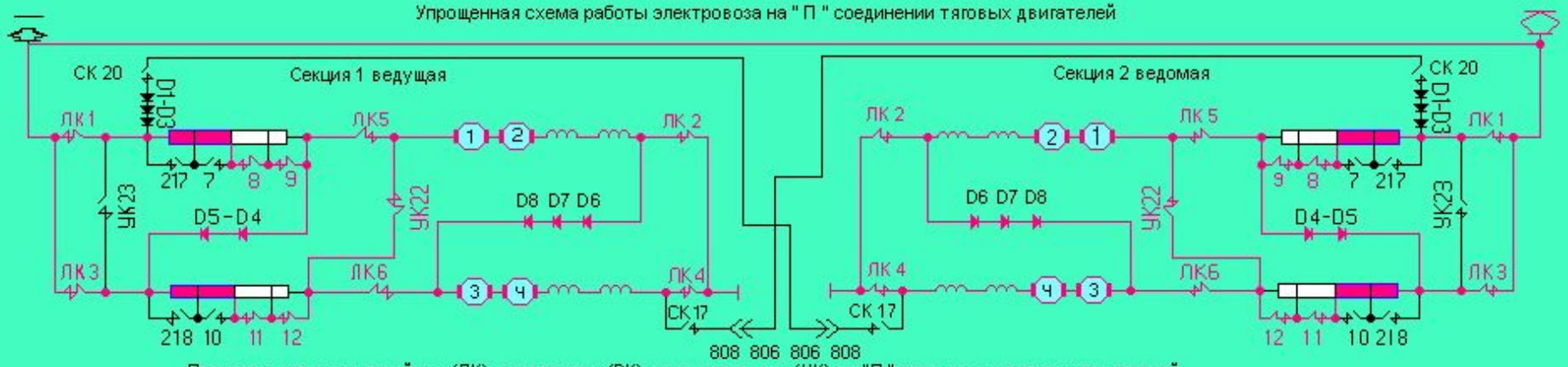


Порядок включения линейных (ЛК), реостатных (РК), уравнительных (УК) на "П" соединении тяговых двигателей

| № | Линейные (ЛК) | | | | | | Реостатные (РК) | | | | | | | | | | | УК | |
|---|---|---|---|---|---|---|---|---|---|---|---|---|---|---|---|---|---|---|---|
| Поз | 1 | 2 | 3 | 4 | 5 | 6 | 217 | 7 | 8 | 9 | 218 | 10 | 11 | 12 | 22 | 17 | 20 | 23 | 24 |
| 1 | ● | ● | ● | ● | ● | ● | | | | ● | | | | | ● | | | | |
| 2 | ● | ● | ● | ● | ● | ● | | | | ● | | | ● | | ● | | | | |
| 3 | ● | ● | ● | ● | ● | ● | | ● | | ● | | | ● | | ● | | | | |
| 4 | ● | ● | ● | ● | ● | ● | ● | ● | | ● | | | ● | | ● | | | | |
| 5 | ● | ● | ● | ● | ● | ● | ● | ● | | ● | | ● | ● | | ● | | | | |
| 6 | ● | ● | ● | ● | ● | ● | ● | ● | | ● | | | | ● | ● | | | | |
| 7 | ● | ● | ● | ● | ● | ● | ● | ● | | ● | | ● | | ● | ● | | | | |
| 8 | ● | ● | ● | ● | ● | ● | ● | ● | | ● | ● | ● | | ● | ● | | | | |
| 9 | ● | ● | ● | ● | ● | ● | | | ● | ● | | | | ● | ● | | | | |
| 10 | ● | ● | ● | ● | ● | ● | | | ● | ● | ● | ● | | ● | ● | | | | |
| 11 | ● | ● | ● | ● | ● | ● | ● | | ● | ● | ● | ● | | ● | ● | | | | |
| 12 | ● | ● | ● | ● | ● | ● | | | ● | ● | | | ● | ● | ● | | | | |
| 13 | ● | ● | ● | ● | ● | ● | | ● | ● | ● | | | ● | ● | ● | | | | |
| 14 | ● | ● | ● | ● | ● | ● | | ● | ● | ● | | ● | ● | ● | ● | | | | |
| ХП | ● | ● | ● | ● | ● | ● | ● | ● | ● | ● | ● | ● | ● | ● | ● | | | | |

Упрощенная схема работы электровоза на " П " соединении тяговых двигателей

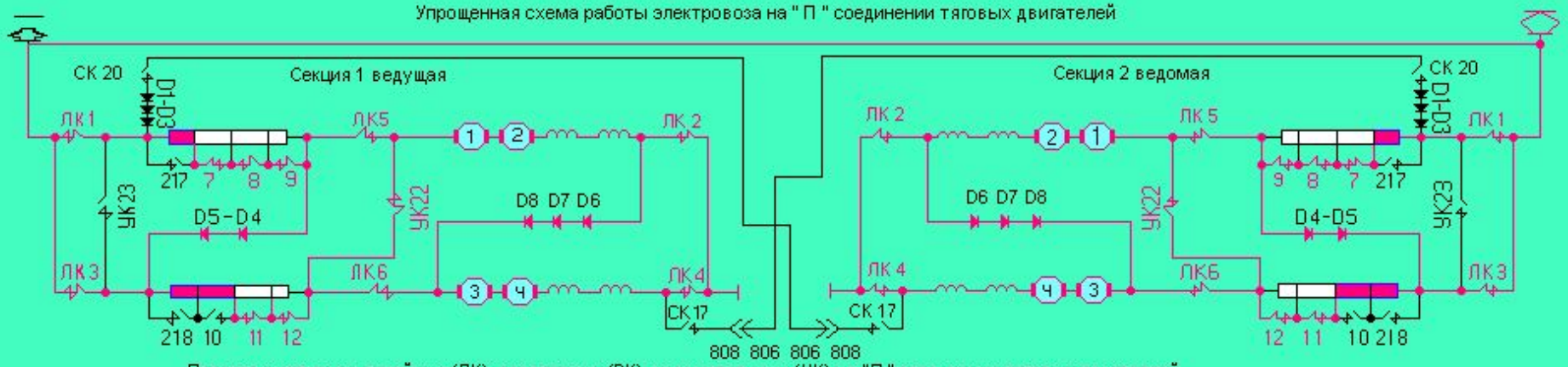


Порядок включения линейных (ЛК), реостатных (РК), уравнительных (УК) на "П" соединении тяговых двигателей

| № | Линейные (ЛК) | | | | | | Реостатные (РК) | | | | | | | | | | | УК | |
|---|---|---|---|---|---|---|---|---|---|---|---|---|---|---|---|---|---|---|---|
| Поз | 1 | 2 | 3 | 4 | 5 | 6 | 217 | 7 | 8 | 9 | 218 | 10 | 11 | 12 | 22 | 17 | 20 | 23 | 24 |
| 1 | ● | ● | ● | ● | ● | ● | | | | ● | | | | | ● | | | | |
| 2 | ● | ● | ● | ● | ● | ● | | | | ● | | | ● | | ● | | | | |
| 3 | ● | ● | ● | ● | ● | ● | | ● | | ● | | | ● | | ● | | | | |
| 4 | ● | ● | ● | ● | ● | ● | ● | ● | | ● | | | ● | | ● | | | | |
| 5 | ● | ● | ● | ● | ● | ● | ● | ● | | ● | | ● | ● | | ● | | | | |
| 6 | ● | ● | ● | ● | ● | ● | ● | ● | | ● | | | | ● | ● | | | | |
| 7 | ● | ● | ● | ● | ● | ● | ● | ● | | ● | | ● | | ● | ● | | | | |
| 8 | ● | ● | ● | ● | ● | ● | ● | ● | | ● | ● | ● | | ● | ● | | | | |
| 9 | ● | ● | ● | ● | ● | ● | | | ● | ● | | | | ● | ● | | | | |
| 10 | ● | ● | ● | ● | ● | ● | | | ● | ● | ● | ● | | ● | ● | | | | |
| 11 | ● | ● | ● | ● | ● | ● | ● | | ● | ● | ● | ● | | ● | ● | | | | |
| 12 | ● | ● | ● | ● | ● | ● | | | ● | ● | | | ● | ● | ● | | | | |
| 13 | ● | ● | ● | ● | ● | ● | | ● | ● | ● | | | ● | ● | ● | | | | |
| 14 | ● | ● | ● | ● | ● | ● | | ● | ● | ● | | ● | ● | ● | ● | | | | |
| ХП | ● | ● | ● | ● | ● | ● | ● | ● | ● | ● | ● | ● | ● | ● | ● | | | | |

Упрощенная схема работы электровоза на " П " соединении тяговых двигателей

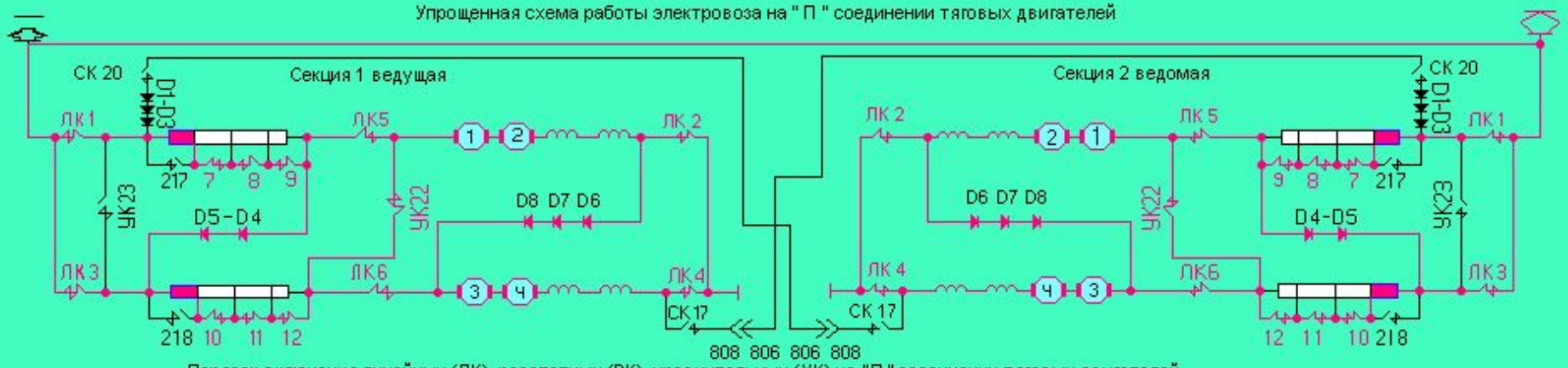


Порядок включения линейных (ЛК), реостатных (РК), уравнительных (УК) на "П" соединении тяговых двигателей

| № | Линейные (ЛК) | | | | | | Реостатные (РК) | | | | | | | | | | | УК | |
|---|---|---|---|---|---|---|---|---|---|---|---|---|---|---|---|---|---|---|---|
| Поз | 1 | 2 | 3 | 4 | 5 | 6 | 217 | 7 | 8 | 9 | 218 | 10 | 11 | 12 | 22 | 17 | 20 | 23 | 24 |
| 1 | ● | ● | ● | ● | ● | ● | | | | ● | | | | | ● | | | | |
| 2 | ● | ● | ● | ● | ● | ● | | | | ● | | | ● | | ● | | | | |
| 3 | ● | ● | ● | ● | ● | ● | | ● | | ● | | | ● | | ● | | | | |
| 4 | ● | ● | ● | ● | ● | ● | ● | ● | | ● | | | ● | | ● | | | | |
| 5 | ● | ● | ● | ● | ● | ● | ● | ● | | ● | | ● | ● | | ● | | | | |
| 6 | ● | ● | ● | ● | ● | ● | ● | ● | | ● | | | | ● | ● | | | | |
| 7 | ● | ● | ● | ● | ● | ● | ● | ● | | ● | | ● | | ● | ● | | | | |
| 8 | ● | ● | ● | ● | ● | ● | ● | ● | | ● | ● | ● | | ● | ● | | | | |
| 9 | ● | ● | ● | ● | ● | ● | | | ● | ● | | | | ● | ● | | | | |
| 10 | ● | ● | ● | ● | ● | ● | | | ● | ● | ● | ● | | ● | ● | | | | |
| 11 | ● | ● | ● | ● | ● | ● | ● | | ● | ● | ● | ● | | ● | ● | | | | |
| 12 | ● | ● | ● | ● | ● | ● | | | ● | ● | | | ● | ● | ● | | | | |
| 13 | ● | ● | ● | ● | ● | ● | | ● | ● | ● | | | ● | ● | ● | | | | |
| 14 | ● | ● | ● | ● | ● | ● | | ● | ● | ● | | ● | ● | ● | ● | | | | |
| ХП | ● | ● | ● | ● | ● | ● | ● | ● | ● | ● | ● | ● | ● | ● | ● | | | | |

Упрощенная схема работы электровоза на " П " соединении тяговых двигателей

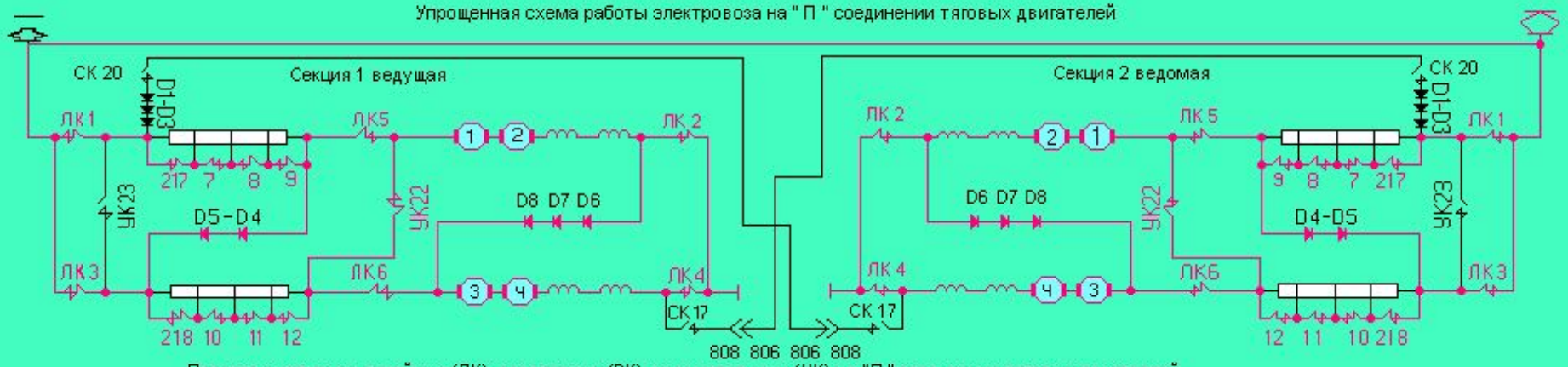


Порядок включения линейных (ЛК), реостатных (РК), уравнительных (УК) на "П" соединении тяговых двигателей

| № | Линейные (ЛК) | | | | | | Реостатные (РК) | | | | | | | | | | | УК | |
|---|---|---|---|---|---|---|---|---|---|---|---|---|---|---|---|---|---|---|---|
| Поз | 1 | 2 | 3 | 4 | 5 | 6 | 217 | 7 | 8 | 9 | 218 | 10 | 11 | 12 | 22 | 17 | 20 | 23 | 24 |
| 1 | ● | ● | ● | ● | ● | ● | | | | ● | | | | | ● | | | | |
| 2 | ● | ● | ● | ● | ● | ● | | | | ● | | | ● | | ● | | | | |
| 3 | ● | ● | ● | ● | ● | ● | | ● | | ● | | | ● | | ● | | | | |
| 4 | ● | ● | ● | ● | ● | ● | ● | ● | | ● | | | ● | | ● | | | | |
| 5 | ● | ● | ● | ● | ● | ● | ● | ● | | ● | | ● | ● | | ● | | | | |
| 6 | ● | ● | ● | ● | ● | ● | ● | ● | | ● | | | | ● | ● | | | | |
| 7 | ● | ● | ● | ● | ● | ● | ● | ● | | ● | | ● | | ● | ● | | | | |
| 8 | ● | ● | ● | ● | ● | ● | ● | ● | | ● | ● | ● | | ● | ● | | | | |
| 9 | ● | ● | ● | ● | ● | ● | | | ● | ● | | | | ● | ● | | | | |
| 10 | ● | ● | ● | ● | ● | ● | | | ● | ● | ● | ● | | ● | ● | | | | |
| 11 | ● | ● | ● | ● | ● | ● | ● | | ● | ● | ● | ● | | ● | ● | | | | |
| 12 | ● | ● | ● | ● | ● | ● | | | ● | ● | | | ● | ● | ● | | | | |
| 13 | ● | ● | ● | ● | ● | ● | | ● | ● | ● | | | ● | ● | ● | | | | |
| 14 | ● | ● | ● | ● | ● | ● | | ● | ● | ● | | ● | ● | ● | ● | | | | |
| ХП | ● | ● | ● | ● | ● | ● | ● | ● | ● | ● | ● | ● | ● | ● | ● | | | | |

# Трех секционный вариант

Упрощенная схема работы трех секционного сцепа на "С" соединении тяговых двигателей (12 двигателей последовательно)

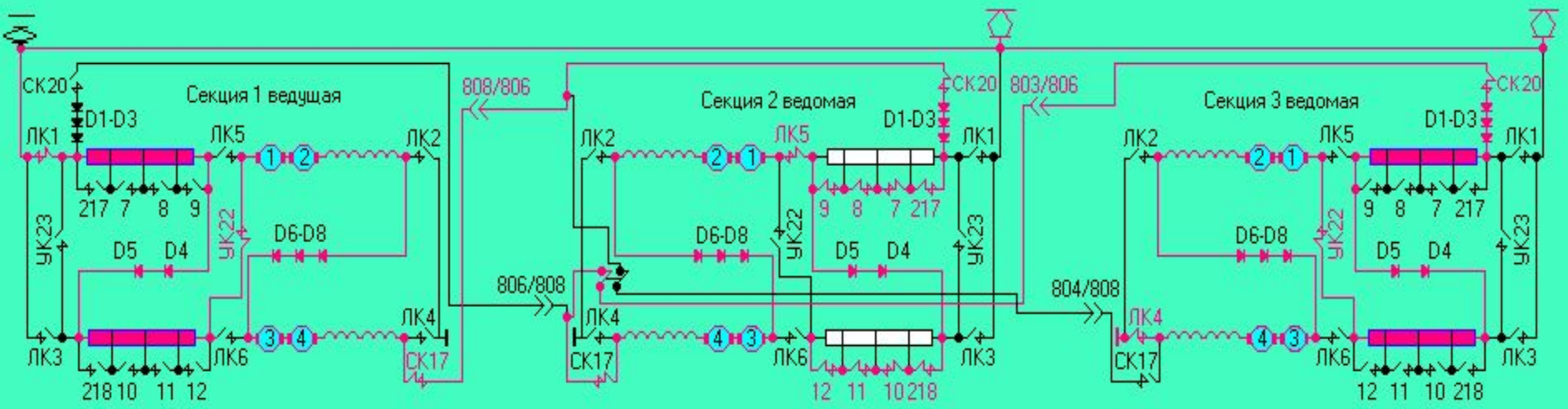


Порядок включения линейных (ЛК), реостатных (РК), уравнительных (УК) контакторов на "С" соединении трех секционного сцепа (12 тяговых двигателей последовательно)

| № | Линейные (ЛК) | | | | | | Реостатные (РК) | | | | | | | | | | | | УК | | Линейные (ЛК) | | | | | | Реостатные (РК) | | | | | | | | | | | | УК | | Линейные (ЛК) | | | | | | Реостатные (РК) | | | | | | | | | | | | УК | |
|---|---|---|---|---|---|---|---|---|---|---|---|---|---|---|---|---|---|---|---|---|---|---|---|---|---|---|---|---|---|---|---|---|---|---|---|---|---|---|---|---|---|---|---|---|---|---|---|---|---|---|---|---|---|---|---|---|---|---|---|---|
| Поз | 1 | 2 | 3 | 4 | 5 | 6 | 217 | 7 | 8 | 9 | 218 | 10 | 11 | 12 | 22 | 17 | 20 | 23 | 24 | 1 | 2 | 3 | 4 | 5 | 6 | 217 | 7 | 8 | 9 | 218 | 10 | 11 | 12 | 22 | 17 | 20 | 23 | 24 | 1 | 2 | 3 | 4 | 5 | 6 | 217 | 7 | 8 | 9 | 218 | 10 | 11 | 12 | 22 | 17 | 20 | 23 | 24 |
| 1 | ● | | | | | | | | | | | | | | ● | ● | | | | | | | | ● | | ● | ● | ● | ● | ● | ● | ● | ● | | ● | ● | | | | | | | ● | | | | | | | | | ● | | ● | | | |
| 2 | ● | | | | | | | | | | | | | | ● | ● | | | | | | | | ● | | ● | ● | ● | ● | ● | ● | ● | ● | | ● | ● | | | | | | | ● | | | | | ● | | | | ● | | ● | | | |
| 3 | ● | | | | | | | | | ● | | | | | ● | ● | | | | | | | | ● | | ● | ● | ● | ● | ● | ● | ● | ● | | ● | ● | | | | | | | ● | | | | | ● | | | | ● | | ● | | | |
| 4 | ● | | | | | | | | | ● | | | | | ● | ● | | | | | | | | ● | | ● | ● | ● | ● | ● | ● | ● | ● | | ● | ● | | | | | | | ● | | | | ● | ● | | | | ● | | ● | | | |
| 5 | ● | | | | | | | | ● | ● | | | | | ● | ● | | | | | | | | ● | | ● | ● | ● | ● | ● | ● | ● | ● | | ● | ● | | | | | | | ● | | | | ● | ● | | | | ● | | ● | | | |
| 6 | ● | | | | | | | | ● | ● | | | | | ● | ● | | | | | | | | ● | | ● | ● | ● | ● | ● | ● | ● | ● | | ● | ● | | | | | | | ● | | | | ● | ● | | | | ● | ● | ● | | | |
| 7 | ● | | ● | | | | | | | | | | | | ● | ● | | | | | | | | ● | | ● | ● | ● | ● | ● | ● | ● | ● | | ● | ● | | | | | | | ● | | | | ● | ● | | | | ● | ● | ● | | | |
| 8 | ● | | ● | | ● | | | | | | | | | | ● | ● | | | | | | | | ● | | ● | ● | ● | ● | ● | ● | ● | ● | | ● | ● | | | | | | | ● | | | | ● | ● | | | | ● | ● | ● | | | |
| 9 | ● | | ● | | ● | | | | | | | | | | ● | ● | | | | | | | | ● | | ● | ● | ● | ● | ● | ● | ● | ● | | ● | ● | | | | | | | ● | | | | ● | ● | | | | ● | ● | ● | | ● | |
| 10 | ● | | ● | | ● | | | | | | | | | | ● | ● | | | | | | | | ● | | ● | ● | ● | ● | ● | ● | ● | ● | | ● | ● | | | | | | | ● | ● | | | | ● | | | | ● | ● | ● | | ● | |
| 11 | ● | | ● | | ● | | | | | ● | | | | | ● | ● | | | | | | | | ● | | ● | ● | ● | ● | ● | ● | ● | ● | | ● | ● | | | | | | | ● | ● | | | | ● | | | | ● | ● | ● | | ● | |
| 12 | ● | | ● | | ● | | | | | ● | | | | | ● | ● | | | | | | | | ● | | ● | ● | ● | ● | ● | ● | ● | ● | | ● | ● | | | | | | | ● | ● | | | | ● | ● | | | ● | ● | ● | | ● | |
| 13 | ● | | ● | | ● | | | | | ● | | | | ● | ● | ● | | | | | | | | ● | | ● | ● | ● | ● | ● | ● | ● | ● | | ● | ● | | | | | | | ● | ● | | | | ● | ● | | | ● | ● | ● | | ● | |
| 14 | ● | | ● | | ● | | | | ● | ● | | | | ● | ● | ● | | | | | | | | ● | | ● | ● | ● | ● | ● | ● | ● | ● | | ● | ● | | | | | | | ● | ● | | | | ● | ● | | | ● | ● | ● | | ● | |
| 15 | ● | | ● | | ● | | | | ● | ● | | | | ● | ● | ● | | | | | | | | ● | | ● | ● | ● | ● | ● | ● | ● | ● | | ● | ● | | | | | | | ● | ● | | | | ● | ● | | | ● | ● | ● | | ● | |
| 16 | ● | | ● | | ● | | | | ● | ● | | | ● | ● | ● | ● | | | | | | | | ● | | ● | ● | ● | ● | ● | ● | ● | ● | | ● | ● | | | | | | | ● | ● | | | | ● | ● | | | ● | ● | ● | | ● | |
| 17 | ● | | ● | | ● | | | | ● | ● | | | ● | ● | ● | ● | | | | | | | | ● | | ● | ● | ● | ● | ● | ● | ● | ● | | ● | ● | | | | | | | ● | ● | | | ● | ● | ● | | | ● | ● | ● | | ● | |
| 18 | ● | | ● | | ● | | | ● | ● | ● | | | ● | ● | ● | ● | | | | | | | | ● | | ● | ● | ● | ● | ● | ● | ● | ● | | ● | ● | | | | | | | ● | ● | | | ● | ● | ● | | | ● | ● | ● | | ● | |
| 19 | ● | | ● | | ● | | | ● | ● | ● | | | ● | ● | ● | ● | | | | | | | | ● | | ● | ● | ● | ● | ● | ● | ● | ● | | ● | ● | | | | | | | ● | ● | | | ● | ● | ● | | ● | ● | ● | ● | | ● | ● | | |
| 20 | ● | | ● | | ● | | | ● | ● | ● | | ● | ● | ● | ● | ● | | | | | | | | ● | | ● | ● | ● | ● | ● | ● | ● | ● | | ● | ● | | | | | | | ● | ● | | | ● | ● | ● | | ● | ● | ● | ● | | ● | ● | | |
| 21 | ● | | ● | | ● | | | ● | ● | ● | | ● | ● | ● | ● | ● | | | | | | | | ● | | ● | ● | ● | ● | ● | ● | ● | ● | | ● | ● | | | | | | | ● | ● | | | ● | ● | ● | ● | ● | ● | ● | ● | | ● | ● | | |
| ХП | ● | | ● | | ● | | ● | ● | ● | ● | ● | ● | ● | ● | ● | ● | | | | | | | | ● | | ● | ● | ● | ● | ● | ● | ● | ● | | ● | ● | | | | | | | ● | ● | | | ● | ● | ● | ● | ● | ● | ● | ● | | ● | ● | | |

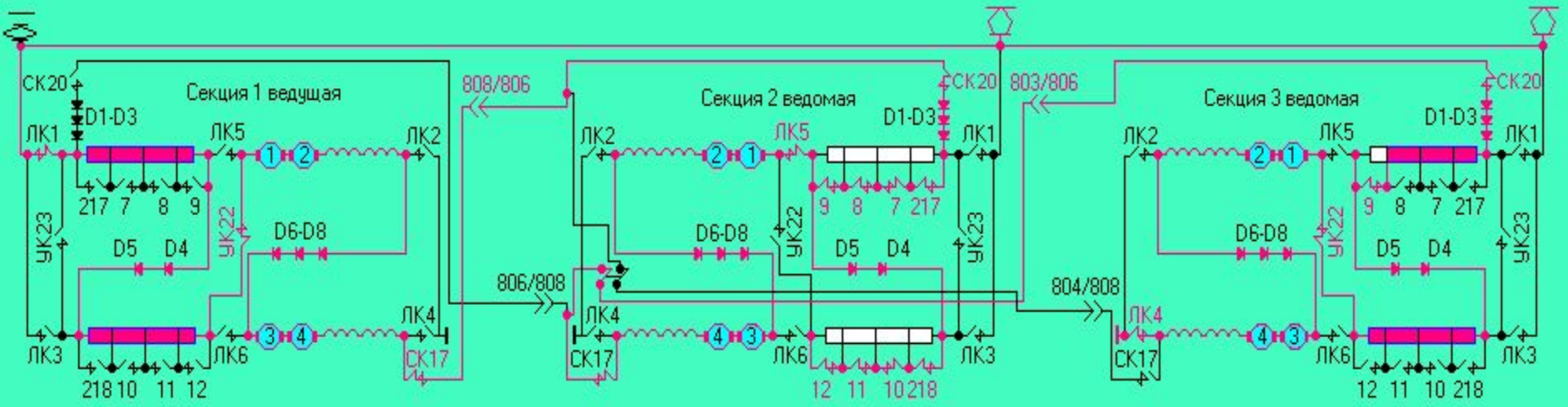


| № Поз | Линейные (ЛК) 1 | 2 | 3 | 4 | 5 | 6 | Реостатные (РК) 217 | 7 | 8 | 9 | 218 | 10 | 11 | 12 | 22 | 17 | 20 | УК 23 | 24 |
|---|---|---|---|---|---|---|---|---|---|---|---|---|---|---|---|---|---|---|---|
| 1 | ● | | | | | | | | | | | | | | ● | ● | | | |
| 2 | ● | | | | | | | | | | | | | | ● | ● | | | |
| 3 | ● | | | | | | | | | ● | | | | | ● | ● | | | |
| 4 | ● | | | | | | | | | ● | | | | | ● | ● | | | |
| 5 | ● | | | | | | | | ● | ● | | | | | ● | ● | | | |
| 6 | ● | | | | | | | | ● | ● | | | | | ● | ● | | | |
| 7 | ● | | ● | | | | | | | | | | | | ● | ● | | | |
| 8 | ● | | ● | | ● | | | | | | | | | | ● | ● | | | |
| 9 | ● | | ● | | ● | | | | | | | | | | ● | ● | | | |
| 10 | ● | | ● | | ● | | | | | | | | | | ● | ● | | | |
| 11 | ● | | ● | | ● | | | | | ● | | | | | ● | ● | | | |
| 12 | ● | | ● | | ● | | | | | ● | | | | | ● | ● | | | |
| 13 | ● | | ● | | ● | | | | | ● | | | | ● | ● | ● | | | |
| 14 | ● | | ● | | ● | | | | ● | ● | | | | ● | ● | ● | | | |
| 15 | ● | | ● | | ● | | | | ● | ● | | | | ● | ● | ● | | | |
| 16 | ● | | ● | | ● | | | | ● | ● | | | ● | ● | ● | ● | | | |
| 17 | ● | | ● | | ● | | | | ● | ● | | | ● | ● | ● | ● | | | |
| 18 | ● | | ● | | ● | | | ● | ● | ● | | | ● | ● | ● | ● | | | |
| 19 | ● | | ● | | ● | | | ● | ● | ● | | | ● | ● | ● | ● | | | |
| 20 | ● | | ● | | ● | | | ● | ● | ● | | ● | ● | ● | ● | ● | | | |
| 21 | ● | | ● | | ● | | | ● | ● | ● | | ● | ● | ● | ● | ● | | | |
| ХП | ● | | ● | | ● | | ● | ● | ● | ● | ● | ● | ● | ● | ● | ● | | | |

| № Поз | Линейные (ЛК) 1 | 2 | 3 | 4 | 5 | 6 | Реостатные (РК) 217 | 7 | 8 | 9 | 218 | 10 | 11 | 12 | 22 | 17 | 20 | УК 23 | 24 |
|---|---|---|---|---|---|---|---|---|---|---|---|---|---|---|---|---|---|---|---|
| 1 | | | | | ● | | ● | ● | ● | ● | ● | ● | ● | ● | | ● | ● | | |
| 2 | | | | | ● | | ● | ● | ● | ● | ● | ● | ● | ● | | ● | ● | | |
| 3 | | | | | ● | | ● | ● | ● | ● | ● | ● | ● | ● | | ● | ● | | |
| 4 | | | | | ● | | ● | ● | ● | ● | ● | ● | ● | ● | | ● | ● | | |
| 5 | | | | | ● | | ● | ● | ● | ● | ● | ● | ● | ● | | ● | ● | | |
| 6 | | | | | ● | | ● | ● | ● | ● | ● | ● | ● | ● | | ● | ● | | |
| 7 | | | | | ● | | ● | ● | ● | ● | ● | ● | ● | ● | | ● | ● | | |
| 8 | | | | | ● | | ● | ● | ● | ● | ● | ● | ● | ● | | ● | ● | | |
| 9 | | | | | ● | | ● | ● | ● | ● | ● | ● | ● | ● | | ● | ● | | |
| 10 | | | | | ● | | ● | ● | ● | ● | ● | ● | ● | ● | | ● | ● | | |
| 11 | | | | | ● | | ● | ● | ● | ● | ● | ● | ● | ● | | ● | ● | | |
| 12 | | | | | ● | | ● | ● | ● | ● | ● | ● | ● | ● | | ● | ● | | |
| 13 | | | | | ● | | ● | ● | ● | ● | ● | ● | ● | ● | | ● | ● | | |
| 14 | | | | | ● | | ● | ● | ● | ● | ● | ● | ● | ● | | ● | ● | | |
| 15 | | | | | ● | | ● | ● | ● | ● | ● | ● | ● | ● | | ● | ● | | |
| 16 | | | | | ● | | ● | ● | ● | ● | ● | ● | ● | ● | | ● | ● | | |
| 17 | | | | | ● | | ● | ● | ● | ● | ● | ● | ● | ● | | ● | ● | | |
| 18 | | | | | ● | | ● | ● | ● | ● | ● | ● | ● | ● | | ● | ● | | |
| 19 | | | | | ● | | ● | ● | ● | ● | ● | ● | ● | ● | | ● | ● | | |
| 20 | | | | | ● | | ● | ● | ● | ● | ● | ● | ● | ● | | ● | ● | | |
| 21 | | | | | ● | | ● | ● | ● | ● | ● | ● | ● | ● | | ● | ● | | |
| ХП | | | | | ● | | ● | ● | ● | ● | ● | ● | ● | ● | | ● | ● | | |

| № Поз | Линейные (ЛК) 1 | 2 | 3 | 4 | 5 | 6 | Реостатные (РК) 217 | 7 | 8 | 9 | 218 | 10 | 11 | 12 | 22 | 17 | 20 | УК 23 | 24 |
|---|---|---|---|---|---|---|---|---|---|---|---|---|---|---|---|---|---|---|---|
| 1 | | | | ● | | | | | | | | | | | ● | | ● | | |
| 2 | | | | ● | | | | | | ● | | | | | ● | | ● | | |
| 3 | | | | ● | | | | | | ● | | | | | ● | | ● | | |
| 4 | | | | ● | | | | | ● | ● | | | | | ● | | ● | | |
| 5 | | | | ● | | | | | ● | ● | | | | | ● | | ● | | |
| 6 | | | | ● | | | | | ● | ● | | | | ● | ● | | ● | | |
| 7 | | | | ● | | | | | ● | ● | | | | ● | ● | | ● | | |
| 8 | | | | ● | | | | | ● | ● | | | | ● | ● | | ● | | |
| 9 | | | | ● | | | | | ● | ● | | | | ● | ● | | ● | ● | |
| 10 | | | | ● | ● | | | | | ● | | | | ● | ● | | ● | ● | |
| 11 | | | | ● | ● | | | | | ● | | | | ● | ● | | ● | ● | |
| 12 | | | | ● | ● | | | | ● | ● | | | | ● | ● | | ● | ● | |
| 13 | | | | ● | ● | | | | ● | ● | | | | ● | ● | | ● | ● | |
| 14 | | | | ● | ● | | | | ● | ● | | | | ● | ● | | ● | ● | |
| 15 | | | | ● | ● | | | | ● | ● | | | ● | ● | ● | | ● | ● | |
| 16 | | | | ● | ● | | | | ● | ● | | | ● | ● | ● | | ● | ● | |
| 17 | | | | ● | ● | | | ● | ● | ● | | | ● | ● | ● | | ● | ● | |
| 18 | | | | ● | ● | | | ● | ● | ● | | | ● | ● | ● | | ● | ● | |
| 19 | | | | ● | ● | | | ● | ● | ● | | ● | ● | ● | ● | | ● | ● | |
| 20 | | | | ● | ● | | | ● | ● | ● | | ● | ● | ● | ● | | ● | ● | |
| 21 | | | | ● | ● | | ● | ● | ● | ● | ● | ● | ● | ● | ● | | ● | ● | |
| ХП | | | | ● | ● | | ● | ● | ● | ● | ● | ● | ● | ● | ● | | ● | ● | |

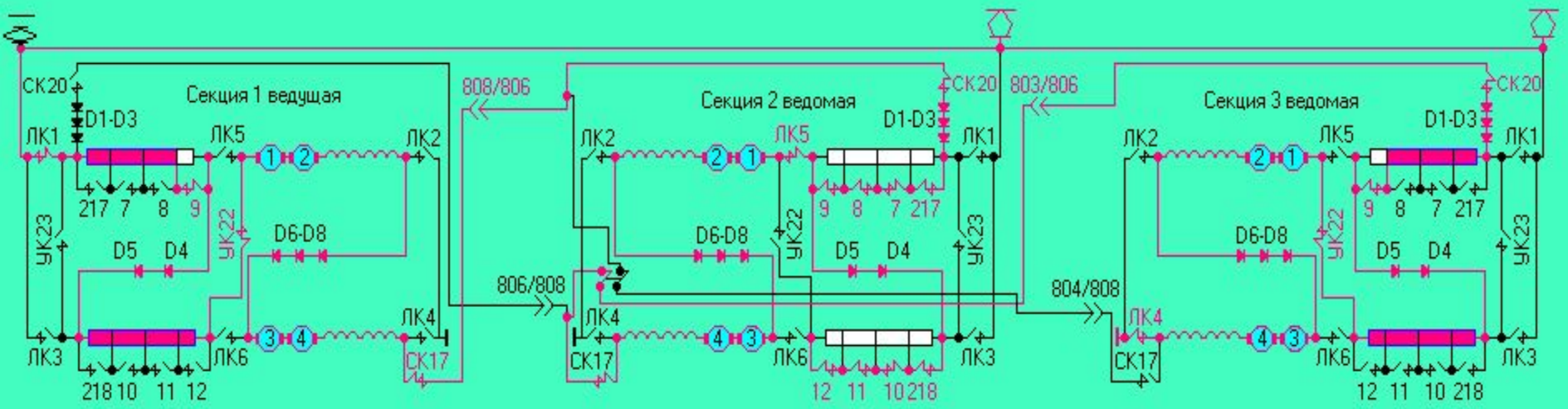


| № Поз | Линейные (ЛК) 1 | 2 | 3 | 4 | 5 | 6 | Реостатные (РК) 217 | 7 | 8 | 9 | 218 | 10 | 11 | 12 | 22 | 17 | 20 | УК 23 | 24 |
|---|---|---|---|---|---|---|---|---|---|---|---|---|---|---|---|---|---|---|---|
| 1 | ● | | | | | | | | | | | | | | ● | ● | | | |
| 2 | ● | | | | | | | | | | | | | | ● | ● | | | |
| 3 | ● | | | | | | | | | ● | | | | | ● | ● | | | |
| 4 | ● | | | | | | | | | ● | | | | | ● | ● | | | |
| 5 | ● | | | | | | | | ● | ● | | | | | ● | ● | | | |
| 6 | ● | | | | | | | | ● | ● | | | | | ● | ● | | | |
| 7 | ● | | ● | | | | | | | | | | | | ● | ● | | | |
| 8 | ● | | ● | | ● | | | | | | | | | | ● | ● | | | |
| 9 | ● | | ● | | ● | | | | | | | | | | ● | ● | | | |
| 10 | ● | | ● | | ● | | | | | | | | | | ● | ● | | | |
| 11 | ● | | ● | | ● | | | | | ● | | | | | ● | ● | | | |
| 12 | ● | | ● | | ● | | | | | ● | | | | | ● | ● | | | |
| 13 | ● | | ● | | ● | | | | | ● | | | | ● | ● | ● | | | |
| 14 | ● | | ● | | ● | | | | ● | ● | | | | ● | ● | ● | | | |
| 15 | ● | | ● | | ● | | | | ● | ● | | | | ● | ● | ● | | | |
| 16 | ● | | ● | | ● | | | | ● | ● | | | ● | ● | ● | ● | | | |
| 17 | ● | | ● | | ● | | | | ● | ● | | | ● | ● | ● | ● | | | |
| 18 | ● | | ● | | ● | | | ● | ● | ● | | | ● | ● | ● | ● | | | |
| 19 | ● | | ● | | ● | | | ● | ● | ● | | | ● | ● | ● | ● | | | |
| 20 | ● | | ● | | ● | | | ● | ● | ● | | ● | ● | ● | ● | ● | | | |
| 21 | ● | | ● | | ● | | | ● | ● | ● | | ● | ● | ● | ● | ● | | | |
| ХП | ● | | ● | | ● | | ● | ● | ● | ● | ● | ● | ● | ● | ● | ● | | | |

| № Поз | Линейные (ЛК) 1 | 2 | 3 | 4 | 5 | 6 | Реостатные (РК) 217 | 7 | 8 | 9 | 218 | 10 | 11 | 12 | 22 | 17 | 20 | УК 23 | 24 |
|---|---|---|---|---|---|---|---|---|---|---|---|---|---|---|---|---|---|---|---|
| 1 | | | | | ● | | ● | ● | ● | ● | ● | ● | ● | ● | | ● | ● | | |
| 2 | | | | | ● | | ● | ● | ● | ● | ● | ● | ● | ● | | ● | ● | | |
| 3 | | | | | ● | | ● | ● | ● | ● | ● | ● | ● | ● | | ● | ● | | |
| 4 | | | | | ● | | ● | ● | ● | ● | ● | ● | ● | ● | | ● | ● | | |
| 5 | | | | | ● | | ● | ● | ● | ● | ● | ● | ● | ● | | ● | ● | | |
| 6 | | | | | ● | | ● | ● | ● | ● | ● | ● | ● | ● | | ● | ● | | |
| 7 | | | | | ● | | ● | ● | ● | ● | ● | ● | ● | ● | | ● | ● | | |
| 8 | | | | | ● | | ● | ● | ● | ● | ● | ● | ● | ● | | ● | ● | | |
| 9 | | | | | ● | | ● | ● | ● | ● | ● | ● | ● | ● | | ● | ● | | |
| 10 | | | | | ● | | ● | ● | ● | ● | ● | ● | ● | ● | | ● | ● | | |
| 11 | | | | | ● | | ● | ● | ● | ● | ● | ● | ● | ● | | ● | ● | | |
| 12 | | | | | ● | | ● | ● | ● | ● | ● | ● | ● | ● | | ● | ● | | |
| 13 | | | | | ● | | ● | ● | ● | ● | ● | ● | ● | ● | | ● | ● | | |
| 14 | | | | | ● | | ● | ● | ● | ● | ● | ● | ● | ● | | ● | ● | | |
| 15 | | | | | ● | | ● | ● | ● | ● | ● | ● | ● | ● | | ● | ● | | |
| 16 | | | | | ● | | ● | ● | ● | ● | ● | ● | ● | ● | | ● | ● | | |
| 17 | | | | | ● | | ● | ● | ● | ● | ● | ● | ● | ● | | ● | ● | | |
| 18 | | | | | ● | | ● | ● | ● | ● | ● | ● | ● | ● | | ● | ● | | |
| 19 | | | | | ● | | ● | ● | ● | ● | ● | ● | ● | ● | | ● | ● | | |
| 20 | | | | | ● | | ● | ● | ● | ● | ● | ● | ● | ● | | ● | ● | | |
| 21 | | | | | ● | | ● | ● | ● | ● | ● | ● | ● | ● | | ● | ● | | |
| ХП | | | | | ● | | ● | ● | ● | ● | ● | ● | ● | ● | | ● | ● | | |

| № Поз | Линейные (ЛК) 1 | 2 | 3 | 4 | 5 | 6 | Реостатные (РК) 217 | 7 | 8 | 9 | 218 | 10 | 11 | 12 | 22 | 17 | 20 | УК 23 | 24 |
|---|---|---|---|---|---|---|---|---|---|---|---|---|---|---|---|---|---|---|---|
| 1 | | | | ● | | | | | | | | | | | ● | | ● | | |
| 2 | | | | ● | | | | | | ● | | | | | ● | | ● | | |
| 3 | | | | ● | | | | | | ● | | | | | ● | | ● | | |
| 4 | | | | ● | | | | | ● | ● | | | | | ● | | ● | | |
| 5 | | | | ● | | | | | ● | ● | | | | | ● | | ● | | |
| 6 | | | | ● | | | | | ● | ● | | | | ● | ● | | ● | | |
| 7 | | | | ● | | | | | ● | ● | | | | ● | ● | | ● | | |
| 8 | | | | ● | | | | | ● | ● | | | | ● | ● | | ● | | |
| 9 | | | | ● | | | | | ● | ● | | | | ● | ● | | ● | ● | |
| 10 | | | | ● | ● | | | | | ● | | | | ● | ● | | ● | ● | |
| 11 | | | | ● | ● | | | | | ● | | | | ● | ● | | ● | ● | |
| 12 | | | | ● | ● | | | | ● | ● | | | | ● | ● | | ● | ● | |
| 13 | | | | ● | ● | | | | ● | ● | | | | ● | ● | | ● | ● | |
| 14 | | | | ● | ● | | | | ● | ● | | | | ● | ● | | ● | ● | |
| 15 | | | | ● | ● | | | | ● | ● | | | ● | ● | ● | | ● | ● | |
| 16 | | | | ● | ● | | | | ● | ● | | | ● | ● | ● | | ● | ● | |
| 17 | | | | ● | ● | | | ● | ● | ● | | | ● | ● | ● | | ● | ● | |
| 18 | | | | ● | ● | | | ● | ● | ● | | | ● | ● | ● | | ● | ● | |
| 19 | | | | ● | ● | | | ● | ● | ● | | ● | ● | ● | ● | | ● | ● | |
| 20 | | | | ● | ● | | | ● | ● | ● | | ● | ● | ● | ● | | ● | ● | |
| 21 | | | | ● | ● | | ● | ● | ● | ● | ● | ● | ● | ● | ● | | ● | ● | |
| ХП | | | | ● | ● | | ● | ● | ● | ● | ● | ● | ● | ● | ● | | ● | ● | |

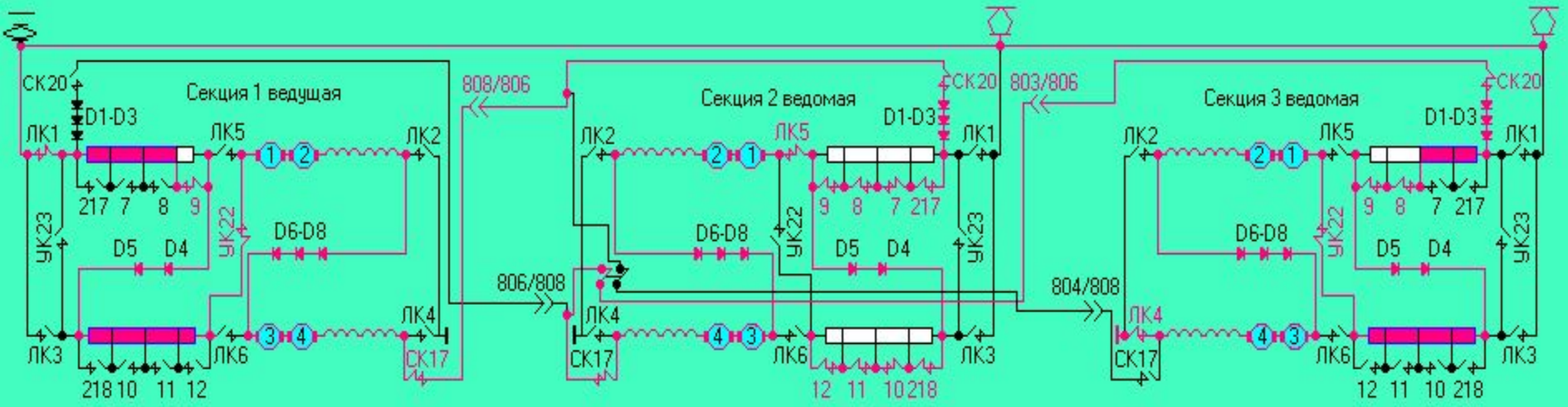


| № Поз | Линейные (ЛК) 1 | 2 | 3 | 4 | 5 | 6 | Реостатные (РК) 217 | 7 | 8 | 9 | 218 | 10 | 11 | 12 | 22 | 17 | 20 | УК 23 | 24 |
|---|---|---|---|---|---|---|---|---|---|---|---|---|---|---|---|---|---|---|---|
| 1 | ● | | | | | | | | | | | | | | ● | ● | | | |
| 2 | ● | | | | | | | | | | | | | | ● | ● | | | |
| 3 | ● | | | | | | | | | ● | | | | | ● | ● | | | |
| 4 | ● | | | | | | | | | ● | | | | | ● | ● | | | |
| 5 | ● | | | | | | | | ● | ● | | | | | ● | ● | | | |
| 6 | ● | | | | | | | | ● | ● | | | | | ● | ● | | | |
| 7 | ● | | ● | | | | | | | | | | | | ● | ● | | | |
| 8 | ● | | ● | | ● | | | | | | | | | | ● | ● | | | |
| 9 | ● | | ● | | ● | | | | | | | | | | ● | ● | | | |
| 10 | ● | | ● | | ● | | | | | | | | | | ● | ● | | | |
| 11 | ● | | ● | | ● | | | | | ● | | | | | ● | ● | | | |
| 12 | ● | | ● | | ● | | | | | ● | | | | | ● | ● | | | |
| 13 | ● | | ● | | ● | | | | | ● | | | | ● | ● | ● | | | |
| 14 | ● | | ● | | ● | | | | ● | ● | | | | ● | ● | ● | | | |
| 15 | ● | | ● | | ● | | | | ● | ● | | | | ● | ● | ● | | | |
| 16 | ● | | ● | | ● | | | | ● | ● | | | ● | ● | ● | ● | | | |
| 17 | ● | | ● | | ● | | | | ● | ● | | | ● | ● | ● | ● | | | |
| 18 | ● | | ● | | ● | | | ● | ● | ● | | | ● | ● | ● | ● | | | |
| 19 | ● | | ● | | ● | | | ● | ● | ● | | | ● | ● | ● | ● | | | |
| 20 | ● | | ● | | ● | | | ● | ● | ● | | ● | ● | ● | ● | ● | | | |
| 21 | ● | | ● | | ● | | | ● | ● | ● | | ● | ● | ● | ● | ● | | | |
| ХП | ● | | ● | | ● | | ● | ● | ● | ● | ● | ● | ● | ● | ● | ● | | | |

| № Поз | Линейные (ЛК) 1 | 2 | 3 | 4 | 5 | 6 | Реостатные (РК) 217 | 7 | 8 | 9 | 218 | 10 | 11 | 12 | 22 | 17 | 20 | УК 23 | 24 |
|---|---|---|---|---|---|---|---|---|---|---|---|---|---|---|---|---|---|---|---|
| 1 | | | | | ● | | ● | ● | ● | ● | ● | ● | ● | ● | | ● | ● | | |
| 2 | | | | | ● | | ● | ● | ● | ● | ● | ● | ● | ● | | ● | ● | | |
| 3 | | | | | ● | | ● | ● | ● | ● | ● | ● | ● | ● | | ● | ● | | |
| 4 | | | | | ● | | ● | ● | ● | ● | ● | ● | ● | ● | | ● | ● | | |
| 5 | | | | | ● | | ● | ● | ● | ● | ● | ● | ● | ● | | ● | ● | | |
| 6 | | | | | ● | | ● | ● | ● | ● | ● | ● | ● | ● | | ● | ● | | |
| 7 | | | | | ● | | ● | ● | ● | ● | ● | ● | ● | ● | | ● | ● | | |
| 8 | | | | | ● | | ● | ● | ● | ● | ● | ● | ● | ● | | ● | ● | | |
| 9 | | | | | ● | | ● | ● | ● | ● | ● | ● | ● | ● | | ● | ● | | |
| 10 | | | | | ● | | ● | ● | ● | ● | ● | ● | ● | ● | | ● | ● | | |
| 11 | | | | | ● | | ● | ● | ● | ● | ● | ● | ● | ● | | ● | ● | | |
| 12 | | | | | ● | | ● | ● | ● | ● | ● | ● | ● | ● | | ● | ● | | |
| 13 | | | | | ● | | ● | ● | ● | ● | ● | ● | ● | ● | | ● | ● | | |
| 14 | | | | | ● | | ● | ● | ● | ● | ● | ● | ● | ● | | ● | ● | | |
| 15 | | | | | ● | | ● | ● | ● | ● | ● | ● | ● | ● | | ● | ● | | |
| 16 | | | | | ● | | ● | ● | ● | ● | ● | ● | ● | ● | | ● | ● | | |
| 17 | | | | | ● | | ● | ● | ● | ● | ● | ● | ● | ● | | ● | ● | | |
| 18 | | | | | ● | | ● | ● | ● | ● | ● | ● | ● | ● | | ● | ● | | |
| 19 | | | | | ● | | ● | ● | ● | ● | ● | ● | ● | ● | | ● | ● | | |
| 20 | | | | | ● | | ● | ● | ● | ● | ● | ● | ● | ● | | ● | ● | | |
| 21 | | | | | ● | | ● | ● | ● | ● | ● | ● | ● | ● | | ● | ● | | |
| ХП | | | | | ● | | ● | ● | ● | ● | ● | ● | ● | ● | | ● | ● | | |

| № Поз | Линейные (ЛК) 1 | 2 | 3 | 4 | 5 | 6 | Реостатные (РК) 217 | 7 | 8 | 9 | 218 | 10 | 11 | 12 | 22 | 17 | 20 | УК 23 | 24 |
|---|---|---|---|---|---|---|---|---|---|---|---|---|---|---|---|---|---|---|---|
| 1 | | | | ● | | | | | | | | | | | ● | | ● | | |
| 2 | | | | ● | | | | | | ● | | | | | ● | | ● | | |
| 3 | | | | ● | | | | | | ● | | | | | ● | | ● | | |
| 4 | | | | ● | | | | | ● | ● | | | | | ● | | ● | | |
| 5 | | | | ● | | | | | ● | ● | | | | | ● | | ● | | |
| 6 | | | | ● | | | | | ● | ● | | | | ● | ● | | ● | | |
| 7 | | | | ● | | | | | ● | ● | | | | ● | ● | | ● | | |
| 8 | | | | ● | | | | | ● | ● | | | | ● | ● | | ● | | |
| 9 | | | | ● | | | | | ● | ● | | | | ● | ● | | ● | ● | |
| 10 | | | | ● | ● | | | | | ● | | | | ● | ● | | ● | ● | |
| 11 | | | | ● | ● | | | | | ● | | | | ● | ● | | ● | ● | |
| 12 | | | | ● | ● | | | | ● | ● | | | | ● | ● | | ● | ● | |
| 13 | | | | ● | ● | | | | ● | ● | | | | ● | ● | | ● | ● | |
| 14 | | | | ● | ● | | | | ● | ● | | | | ● | ● | | ● | ● | |
| 15 | | | | ● | ● | | | | ● | ● | | | ● | ● | ● | | ● | ● | |
| 16 | | | | ● | ● | | | | ● | ● | | | ● | ● | ● | | ● | ● | |
| 17 | | | | ● | ● | | | ● | ● | ● | | | ● | ● | ● | | ● | ● | |
| 18 | | | | ● | ● | | | ● | ● | ● | | | ● | ● | ● | | ● | ● | |
| 19 | | | | ● | ● | | | ● | ● | ● | | ● | ● | ● | ● | | ● | ● | |
| 20 | | | | ● | ● | | | ● | ● | ● | | ● | ● | ● | ● | | ● | ● | |
| 21 | | | | ● | ● | | ● | ● | ● | ● | ● | ● | ● | ● | ● | | ● | ● | |
| ХП | | | | ● | ● | | ● | ● | ● | ● | ● | ● | ● | ● | ● | | ● | ● | |

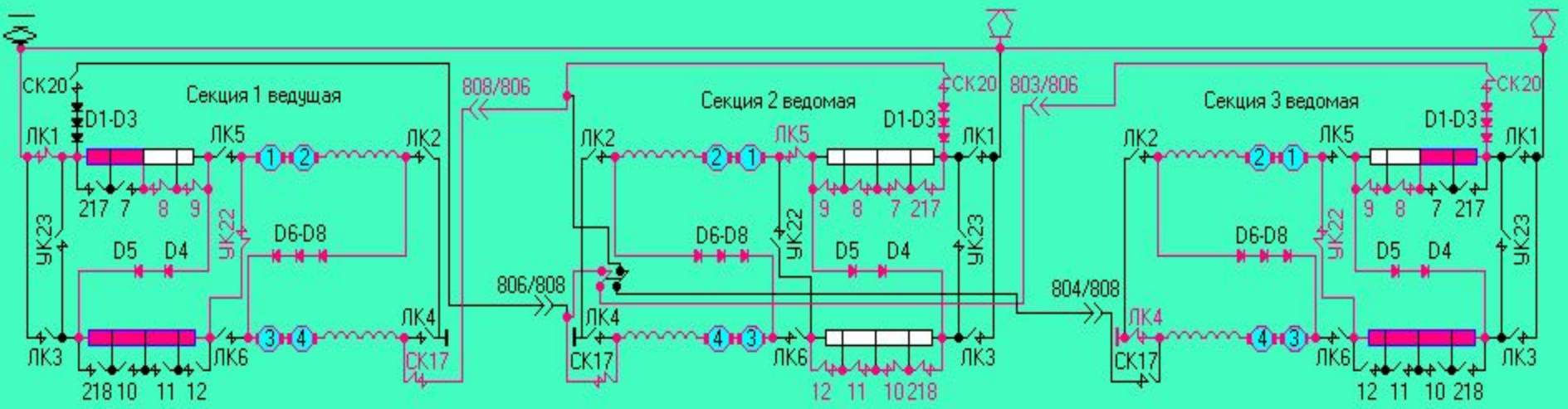


| № Поз | Линейные (ЛК) 1 | 2 | 3 | 4 | 5 | 6 | Реостатные (РК) 217 | 7 | 8 | 9 | 218 | 10 | 11 | 12 | 22 | 17 | 20 | УК 23 | 24 |
|---|---|---|---|---|---|---|---|---|---|---|---|---|---|---|---|---|---|---|---|
| 1 | ● | | | | | | | | | | | | | | ● | ● | | | |
| 2 | ● | | | | | | | | | | | | | | ● | ● | | | |
| 3 | ● | | | | | | | | | ● | | | | | ● | ● | | | |
| 4 | ● | | | | | | | | | ● | | | | | ● | ● | | | |
| 5 | ● | | | | | | | | ● | ● | | | | | ● | ● | | | |
| 6 | ● | | | | | | | | ● | ● | | | | | ● | ● | | | |
| 7 | ● | | ● | | | | | | | | | | | | ● | ● | | | |
| 8 | ● | | ● | | ● | | | | | | | | | | ● | ● | | | |
| 9 | ● | | ● | | ● | | | | | | | | | | ● | ● | | | |
| 10 | ● | | ● | | ● | | | | | | | | | | ● | ● | | | |
| 11 | ● | | ● | | ● | | | | | ● | | | | | ● | ● | | | |
| 12 | ● | | ● | | ● | | | | | ● | | | | | ● | ● | | | |
| 13 | ● | | ● | | ● | | | | | ● | | | | ● | ● | ● | | | |
| 14 | ● | | ● | | ● | | | | ● | ● | | | | ● | ● | ● | | | |
| 15 | ● | | ● | | ● | | | | ● | ● | | | | ● | ● | ● | | | |
| 16 | ● | | ● | | ● | | | | ● | ● | | | ● | ● | ● | ● | | | |
| 17 | ● | | ● | | ● | | | | ● | ● | | | ● | ● | ● | ● | | | |
| 18 | ● | | ● | | ● | | | ● | ● | ● | | | ● | ● | ● | ● | | | |
| 19 | ● | | ● | | ● | | | ● | ● | ● | | | ● | ● | ● | ● | | | |
| 20 | ● | | ● | | ● | | | ● | ● | ● | | ● | ● | ● | ● | ● | | | |
| 21 | ● | | ● | | ● | | | ● | ● | ● | | ● | ● | ● | ● | ● | | | |
| ХП | ● | | ● | | ● | | ● | ● | ● | ● | ● | ● | ● | ● | ● | ● | | | |

| № Поз | Линейные (ЛК) 1 | 2 | 3 | 4 | 5 | 6 | Реостатные (РК) 217 | 7 | 8 | 9 | 218 | 10 | 11 | 12 | 22 | 17 | 20 | УК 23 | 24 |
|---|---|---|---|---|---|---|---|---|---|---|---|---|---|---|---|---|---|---|---|
| 1 | | | | | ● | | ● | ● | ● | ● | ● | ● | ● | ● | | ● | ● | | |
| 2 | | | | | ● | | ● | ● | ● | ● | ● | ● | ● | ● | | ● | ● | | |
| 3 | | | | | ● | | ● | ● | ● | ● | ● | ● | ● | ● | | ● | ● | | |
| 4 | | | | | ● | | ● | ● | ● | ● | ● | ● | ● | ● | | ● | ● | | |
| 5 | | | | | ● | | ● | ● | ● | ● | ● | ● | ● | ● | | ● | ● | | |
| 6 | | | | | ● | | ● | ● | ● | ● | ● | ● | ● | ● | | ● | ● | | |
| 7 | | | | | ● | | ● | ● | ● | ● | ● | ● | ● | ● | | ● | ● | | |
| 8 | | | | | ● | | ● | ● | ● | ● | ● | ● | ● | ● | | ● | ● | | |
| 9 | | | | | ● | | ● | ● | ● | ● | ● | ● | ● | ● | | ● | ● | | |
| 10 | | | | | ● | | ● | ● | ● | ● | ● | ● | ● | ● | | ● | ● | | |
| 11 | | | | | ● | | ● | ● | ● | ● | ● | ● | ● | ● | | ● | ● | | |
| 12 | | | | | ● | | ● | ● | ● | ● | ● | ● | ● | ● | | ● | ● | | |
| 13 | | | | | ● | | ● | ● | ● | ● | ● | ● | ● | ● | | ● | ● | | |
| 14 | | | | | ● | | ● | ● | ● | ● | ● | ● | ● | ● | | ● | ● | | |
| 15 | | | | | ● | | ● | ● | ● | ● | ● | ● | ● | ● | | ● | ● | | |
| 16 | | | | | ● | | ● | ● | ● | ● | ● | ● | ● | ● | | ● | ● | | |
| 17 | | | | | ● | | ● | ● | ● | ● | ● | ● | ● | ● | | ● | ● | | |
| 18 | | | | | ● | | ● | ● | ● | ● | ● | ● | ● | ● | | ● | ● | | |
| 19 | | | | | ● | | ● | ● | ● | ● | ● | ● | ● | ● | | ● | ● | | |
| 20 | | | | | ● | | ● | ● | ● | ● | ● | ● | ● | ● | | ● | ● | | |
| 21 | | | | | ● | | ● | ● | ● | ● | ● | ● | ● | ● | | ● | ● | | |
| ХП | | | | | ● | | ● | ● | ● | ● | ● | ● | ● | ● | | ● | ● | | |

| № Поз | Линейные (ЛК) 1 | 2 | 3 | 4 | 5 | 6 | Реостатные (РК) 217 | 7 | 8 | 9 | 218 | 10 | 11 | 12 | 22 | 17 | 20 | УК 23 | 24 |
|---|---|---|---|---|---|---|---|---|---|---|---|---|---|---|---|---|---|---|---|
| 1 | | | | ● | | | | | | | | | | | ● | | ● | | |
| 2 | | | | ● | | | | | | ● | | | | | ● | | ● | | |
| 3 | | | | ● | | | | | | ● | | | | | ● | | ● | | |
| 4 | | | | ● | | | | | ● | ● | | | | | ● | | ● | | |
| 5 | | | | ● | | | | | ● | ● | | | | | ● | | ● | | |
| 6 | | | | ● | | | | | ● | ● | | | | ● | ● | | ● | | |
| 7 | | | | ● | | | | | ● | ● | | | | ● | ● | | ● | | |
| 8 | | | | ● | | | | | ● | ● | | | | ● | ● | | ● | | |
| 9 | | | | ● | | | | | ● | ● | | | | ● | ● | | ● | ● | |
| 10 | | | | ● | ● | | | | | ● | | | | ● | ● | | ● | ● | |
| 11 | | | | ● | ● | | | | | ● | | | | ● | ● | | ● | ● | |
| 12 | | | | ● | ● | | | | ● | ● | | | | ● | ● | | ● | ● | |
| 13 | | | | ● | ● | | | | ● | ● | | | | ● | ● | | ● | ● | |
| 14 | | | | ● | ● | | | | ● | ● | | | | ● | ● | | ● | ● | |
| 15 | | | | ● | ● | | | | ● | ● | | | ● | ● | ● | | ● | ● | |
| 16 | | | | ● | ● | | | | ● | ● | | | ● | ● | ● | | ● | ● | |
| 17 | | | | ● | ● | | | ● | ● | ● | | | ● | ● | ● | | ● | ● | |
| 18 | | | | ● | ● | | | ● | ● | ● | | | ● | ● | ● | | ● | ● | |
| 19 | | | | ● | ● | | | ● | ● | ● | | ● | ● | ● | ● | | ● | ● | |
| 20 | | | | ● | ● | | | ● | ● | ● | | ● | ● | ● | ● | | ● | ● | |
| 21 | | | | ● | ● | | ● | ● | ● | ● | ● | ● | ● | ● | ● | | ● | ● | |
| ХП | | | | ● | ● | | ● | ● | ● | ● | ● | ● | ● | ● | ● | | ● | ● | |

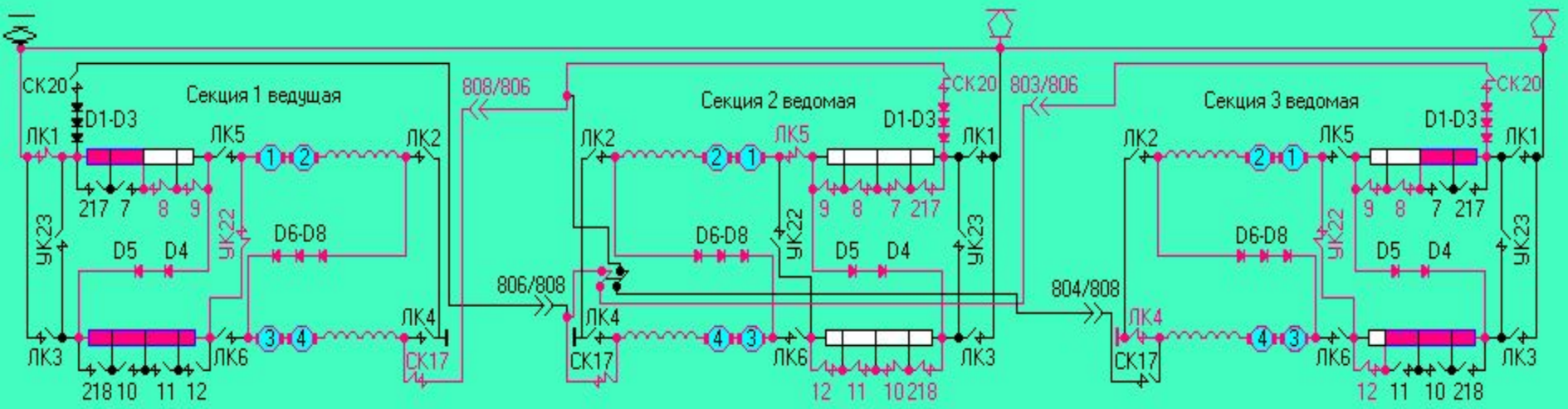


| № Поз | Линейные (ЛК) 1 | 2 | 3 | 4 | 5 | 6 | Реостатные (РК) 217 | 7 | 8 | 9 | 218 | 10 | 11 | 12 | 22 | 17 | 20 | УК 23 | 24 |
|---|---|---|---|---|---|---|---|---|---|---|---|---|---|---|---|---|---|---|---|
| 1 | ● | | | | | | | | | | | | | | ● | ● | | | |
| 2 | ● | | | | | | | | | | | | | | ● | ● | | | |
| 3 | ● | | | | | | | | | ● | | | | | ● | ● | | | |
| 4 | ● | | | | | | | | | ● | | | | | ● | ● | | | |
| 5 | ● | | | | | | | | ● | ● | | | | | ● | ● | | | |
| 6 | ● | | | | | | | | ● | ● | | | | | ● | ● | | | |
| 7 | ● | | ● | | | | | | | | | | | | ● | ● | | | |
| 8 | ● | | ● | | ● | | | | | | | | | | ● | ● | | | |
| 9 | ● | | ● | | ● | | | | | | | | | | ● | ● | | | |
| 10 | ● | | ● | | ● | | | | | | | | | | ● | ● | | | |
| 11 | ● | | ● | | ● | | | | | ● | | | | | ● | ● | | | |
| 12 | ● | | ● | | ● | | | | | ● | | | | | ● | ● | | | |
| 13 | ● | | ● | | ● | | | | | ● | | | | ● | ● | ● | | | |
| 14 | ● | | ● | | ● | | | | ● | ● | | | | ● | ● | ● | | | |
| 15 | ● | | ● | | ● | | | | ● | ● | | | | ● | ● | ● | | | |
| 16 | ● | | ● | | ● | | | | ● | ● | | | ● | ● | ● | ● | | | |
| 17 | ● | | ● | | ● | | | | ● | ● | | | ● | ● | ● | ● | | | |
| 18 | ● | | ● | | ● | | | ● | ● | ● | | | ● | ● | ● | ● | | | |
| 19 | ● | | ● | | ● | | | ● | ● | ● | | | ● | ● | ● | ● | | | |
| 20 | ● | | ● | | ● | | | ● | ● | ● | | ● | ● | ● | ● | ● | | | |
| 21 | ● | | ● | | ● | | | ● | ● | ● | | ● | ● | ● | ● | ● | | | |
| ХП | ● | | ● | | ● | | ● | ● | ● | ● | ● | ● | ● | ● | ● | ● | | | |

| № Поз | Линейные (ЛК) 1 | 2 | 3 | 4 | 5 | 6 | Реостатные (РК) 217 | 7 | 8 | 9 | 218 | 10 | 11 | 12 | 22 | 17 | 20 | УК 23 | 24 |
|---|---|---|---|---|---|---|---|---|---|---|---|---|---|---|---|---|---|---|---|
| 1 | | | | | ● | | ● | ● | ● | ● | ● | ● | ● | ● | | ● | ● | | |
| 2 | | | | | ● | | ● | ● | ● | ● | ● | ● | ● | ● | | ● | ● | | |
| 3 | | | | | ● | | ● | ● | ● | ● | ● | ● | ● | ● | | ● | ● | | |
| 4 | | | | | ● | | ● | ● | ● | ● | ● | ● | ● | ● | | ● | ● | | |
| 5 | | | | | ● | | ● | ● | ● | ● | ● | ● | ● | ● | | ● | ● | | |
| 6 | | | | | ● | | ● | ● | ● | ● | ● | ● | ● | ● | | ● | ● | | |
| 7 | | | | | ● | | ● | ● | ● | ● | ● | ● | ● | ● | | ● | ● | | |
| 8 | | | | | ● | | ● | ● | ● | ● | ● | ● | ● | ● | | ● | ● | | |
| 9 | | | | | ● | | ● | ● | ● | ● | ● | ● | ● | ● | | ● | ● | | |
| 10 | | | | | ● | | ● | ● | ● | ● | ● | ● | ● | ● | | ● | ● | | |
| 11 | | | | | ● | | ● | ● | ● | ● | ● | ● | ● | ● | | ● | ● | | |
| 12 | | | | | ● | | ● | ● | ● | ● | ● | ● | ● | ● | | ● | ● | | |
| 13 | | | | | ● | | ● | ● | ● | ● | ● | ● | ● | ● | | ● | ● | | |
| 14 | | | | | ● | | ● | ● | ● | ● | ● | ● | ● | ● | | ● | ● | | |
| 15 | | | | | ● | | ● | ● | ● | ● | ● | ● | ● | ● | | ● | ● | | |
| 16 | | | | | ● | | ● | ● | ● | ● | ● | ● | ● | ● | | ● | ● | | |
| 17 | | | | | ● | | ● | ● | ● | ● | ● | ● | ● | ● | | ● | ● | | |
| 18 | | | | | ● | | ● | ● | ● | ● | ● | ● | ● | ● | | ● | ● | | |
| 19 | | | | | ● | | ● | ● | ● | ● | ● | ● | ● | ● | | ● | ● | | |
| 20 | | | | | ● | | ● | ● | ● | ● | ● | ● | ● | ● | | ● | ● | | |
| 21 | | | | | ● | | ● | ● | ● | ● | ● | ● | ● | ● | | ● | ● | | |
| ХП | | | | | ● | | ● | ● | ● | ● | ● | ● | ● | ● | | ● | ● | | |

| № Поз | Линейные (ЛК) 1 | 2 | 3 | 4 | 5 | 6 | Реостатные (РК) 217 | 7 | 8 | 9 | 218 | 10 | 11 | 12 | 22 | 17 | 20 | УК 23 | 24 |
|---|---|---|---|---|---|---|---|---|---|---|---|---|---|---|---|---|---|---|---|
| 1 | | | | ● | | | | | | | | | | | ● | | ● | | |
| 2 | | | | ● | | | | | | ● | | | | | ● | | ● | | |
| 3 | | | | ● | | | | | | ● | | | | | ● | | ● | | |
| 4 | | | | ● | | | | | ● | ● | | | | | ● | | ● | | |
| 5 | | | | ● | | | | | ● | ● | | | | | ● | | ● | | |
| 6 | | | | ● | | | | | ● | ● | | | | ● | ● | | ● | | |
| 7 | | | | ● | | | | | ● | ● | | | | ● | ● | | ● | | |
| 8 | | | | ● | | | | | ● | ● | | | | ● | ● | | ● | | |
| 9 | | | | ● | | | | | ● | ● | | | | ● | ● | | ● | ● | |
| 10 | | | | ● | ● | | | | | ● | | | | ● | ● | | ● | ● | |
| 11 | | | | ● | ● | | | | | ● | | | | ● | ● | | ● | ● | |
| 12 | | | | ● | ● | | | | ● | ● | | | | ● | ● | | ● | ● | |
| 13 | | | | ● | ● | | | | ● | ● | | | | ● | ● | | ● | ● | |
| 14 | | | | ● | ● | | | | ● | ● | | | | ● | ● | | ● | ● | |
| 15 | | | | ● | ● | | | | ● | ● | | | ● | ● | ● | | ● | ● | |
| 16 | | | | ● | ● | | | | ● | ● | | | ● | ● | ● | | ● | ● | |
| 17 | | | | ● | ● | | | ● | ● | ● | | | ● | ● | ● | | ● | ● | |
| 18 | | | | ● | ● | | | ● | ● | ● | | | ● | ● | ● | | ● | ● | |
| 19 | | | | ● | ● | | | ● | ● | ● | | ● | ● | ● | ● | | ● | ● | |
| 20 | | | | ● | ● | | | ● | ● | ● | | ● | ● | ● | ● | | ● | ● | |
| 21 | | | | ● | ● | | ● | ● | ● | ● | ● | ● | ● | ● | ● | | ● | ● | |
| ХП | | | | ● | ● | | ● | ● | ● | ● | ● | ● | ● | ● | ● | | ● | ● | |

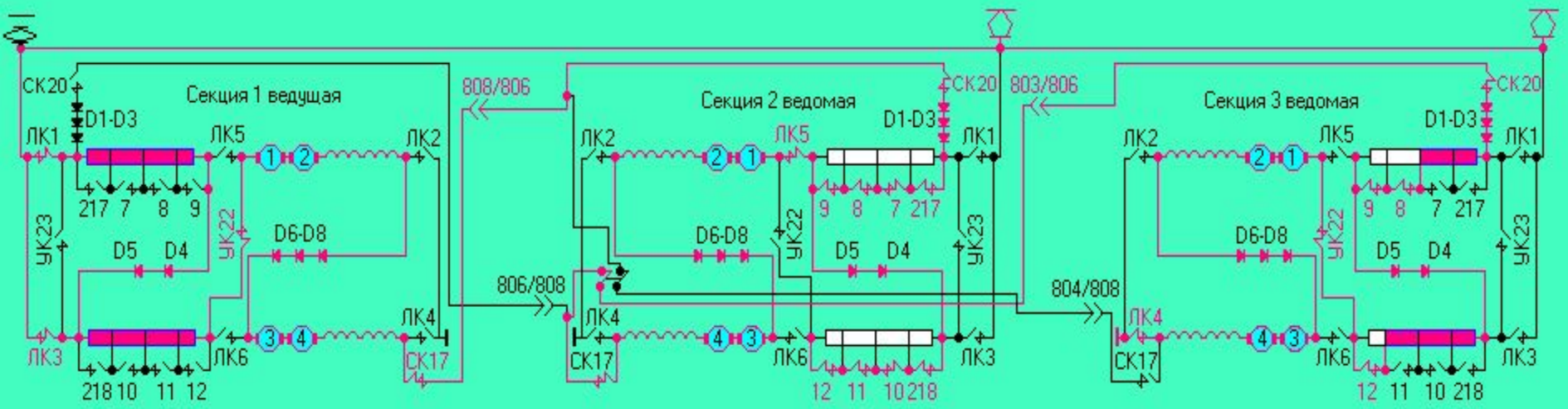


| № Поз | Линейные (ЛК) 1 | 2 | 3 | 4 | 5 | 6 | Реостатные (РК) 217 | 7 | 8 | 9 | 218 | 10 | 11 | 12 | 22 | 17 | 20 | УК 23 | 24 |
|---|---|---|---|---|---|---|---|---|---|---|---|---|---|---|---|---|---|---|---|
| 1 | ● | | | | | | | | | | | | | | ● | ● | | | |
| 2 | ● | | | | | | | | | | | | | | ● | ● | | | |
| 3 | ● | | | | | | | | | ● | | | | | ● | ● | | | |
| 4 | ● | | | | | | | | | ● | | | | | ● | ● | | | |
| 5 | ● | | | | | | | | ● | ● | | | | | ● | ● | | | |
| 6 | ● | | | | | | | | ● | ● | | | | | ● | ● | | | |
| 7 | ● | | ● | | | | | | | | | | | | ● | ● | | | |
| 8 | ● | | ● | | ● | | | | | | | | | | ● | ● | | | |
| 9 | ● | | ● | | ● | | | | | | | | | | ● | ● | | | |
| 10 | ● | | ● | | ● | | | | | | | | | | ● | ● | | | |
| 11 | ● | | ● | | ● | | | | | ● | | | | | ● | ● | | | |
| 12 | ● | | ● | | ● | | | | | ● | | | | | ● | ● | | | |
| 13 | ● | | ● | | ● | | | | | ● | | | | ● | ● | ● | | | |
| 14 | ● | | ● | | ● | | | | ● | ● | | | | ● | ● | ● | | | |
| 15 | ● | | ● | | ● | | | | ● | ● | | | | ● | ● | ● | | | |
| 16 | ● | | ● | | ● | | | | ● | ● | | | ● | ● | ● | ● | | | |
| 17 | ● | | ● | | ● | | | | ● | ● | | | ● | ● | ● | ● | | | |
| 18 | ● | | ● | | ● | | | ● | ● | ● | | | ● | ● | ● | ● | | | |
| 19 | ● | | ● | | ● | | | ● | ● | ● | | | ● | ● | ● | ● | | | |
| 20 | ● | | ● | | ● | | | ● | ● | ● | | ● | ● | ● | ● | ● | | | |
| 21 | ● | | ● | | ● | | | ● | ● | ● | | ● | ● | ● | ● | ● | | | |
| ХП | ● | | ● | | ● | | ● | ● | ● | ● | ● | ● | ● | ● | ● | ● | | | |

| № Поз | Линейные (ЛК) 1 | 2 | 3 | 4 | 5 | 6 | Реостатные (РК) 217 | 7 | 8 | 9 | 218 | 10 | 11 | 12 | 22 | 17 | 20 | УК 23 | 24 |
|---|---|---|---|---|---|---|---|---|---|---|---|---|---|---|---|---|---|---|---|
| 1 | | | | | ● | | ● | ● | ● | ● | ● | ● | ● | ● | | ● | ● | | |
| 2 | | | | | ● | | ● | ● | ● | ● | ● | ● | ● | ● | | ● | ● | | |
| 3 | | | | | ● | | ● | ● | ● | ● | ● | ● | ● | ● | | ● | ● | | |
| 4 | | | | | ● | | ● | ● | ● | ● | ● | ● | ● | ● | | ● | ● | | |
| 5 | | | | | ● | | ● | ● | ● | ● | ● | ● | ● | ● | | ● | ● | | |
| 6 | | | | | ● | | ● | ● | ● | ● | ● | ● | ● | ● | | ● | ● | | |
| 7 | | | | | ● | | ● | ● | ● | ● | ● | ● | ● | ● | | ● | ● | | |
| 8 | | | | | ● | | ● | ● | ● | ● | ● | ● | ● | ● | | ● | ● | | |
| 9 | | | | | ● | | ● | ● | ● | ● | ● | ● | ● | ● | | ● | ● | | |
| 10 | | | | | ● | | ● | ● | ● | ● | ● | ● | ● | ● | | ● | ● | | |
| 11 | | | | | ● | | ● | ● | ● | ● | ● | ● | ● | ● | | ● | ● | | |
| 12 | | | | | ● | | ● | ● | ● | ● | ● | ● | ● | ● | | ● | ● | | |
| 13 | | | | | ● | | ● | ● | ● | ● | ● | ● | ● | ● | | ● | ● | | |
| 14 | | | | | ● | | ● | ● | ● | ● | ● | ● | ● | ● | | ● | ● | | |
| 15 | | | | | ● | | ● | ● | ● | ● | ● | ● | ● | ● | | ● | ● | | |
| 16 | | | | | ● | | ● | ● | ● | ● | ● | ● | ● | ● | | ● | ● | | |
| 17 | | | | | ● | | ● | ● | ● | ● | ● | ● | ● | ● | | ● | ● | | |
| 18 | | | | | ● | | ● | ● | ● | ● | ● | ● | ● | ● | | ● | ● | | |
| 19 | | | | | ● | | ● | ● | ● | ● | ● | ● | ● | ● | | ● | ● | | |
| 20 | | | | | ● | | ● | ● | ● | ● | ● | ● | ● | ● | | ● | ● | | |
| 21 | | | | | ● | | ● | ● | ● | ● | ● | ● | ● | ● | | ● | ● | | |
| ХП | | | | | ● | | ● | ● | ● | ● | ● | ● | ● | ● | | ● | ● | | |

| № Поз | Линейные (ЛК) 1 | 2 | 3 | 4 | 5 | 6 | Реостатные (РК) 217 | 7 | 8 | 9 | 218 | 10 | 11 | 12 | 22 | 17 | 20 | УК 23 | 24 |
|---|---|---|---|---|---|---|---|---|---|---|---|---|---|---|---|---|---|---|---|
| 1 | | | | ● | | | | | | | | | | | ● | | ● | | |
| 2 | | | | ● | | | | | | ● | | | | | ● | | ● | | |
| 3 | | | | ● | | | | | | ● | | | | | ● | | ● | | |
| 4 | | | | ● | | | | | ● | ● | | | | | ● | | ● | | |
| 5 | | | | ● | | | | | ● | ● | | | | | ● | | ● | | |
| 6 | | | | ● | | | | | ● | ● | | | | ● | ● | | ● | | |
| 7 | | | | ● | | | | | ● | ● | | | | ● | ● | | ● | | |
| 8 | | | | ● | | | | | ● | ● | | | | ● | ● | | ● | | |
| 9 | | | | ● | | | | | ● | ● | | | | ● | ● | | ● | ● | |
| 10 | | | | ● | ● | | | | | ● | | | | ● | ● | | ● | ● | |
| 11 | | | | ● | ● | | | | | ● | | | | ● | ● | | ● | ● | |
| 12 | | | | ● | ● | | | | ● | ● | | | | ● | ● | | ● | ● | |
| 13 | | | | ● | ● | | | | ● | ● | | | | ● | ● | | ● | ● | |
| 14 | | | | ● | ● | | | | ● | ● | | | | ● | ● | | ● | ● | |
| 15 | | | | ● | ● | | | | ● | ● | | | ● | ● | ● | | ● | ● | |
| 16 | | | | ● | ● | | | | ● | ● | | | ● | ● | ● | | ● | ● | |
| 17 | | | | ● | ● | | | ● | ● | ● | | | ● | ● | ● | | ● | ● | |
| 18 | | | | ● | ● | | | ● | ● | ● | | | ● | ● | ● | | ● | ● | |
| 19 | | | | ● | ● | | | ● | ● | ● | | ● | ● | ● | ● | | ● | ● | |
| 20 | | | | ● | ● | | | ● | ● | ● | | ● | ● | ● | ● | | ● | ● | |
| 21 | | | | ● | ● | | ● | ● | ● | ● | ● | ● | ● | ● | ● | | ● | ● | |
| ХП | | | | ● | ● | | ● | ● | ● | ● | ● | ● | ● | ● | ● | | ● | ● | |

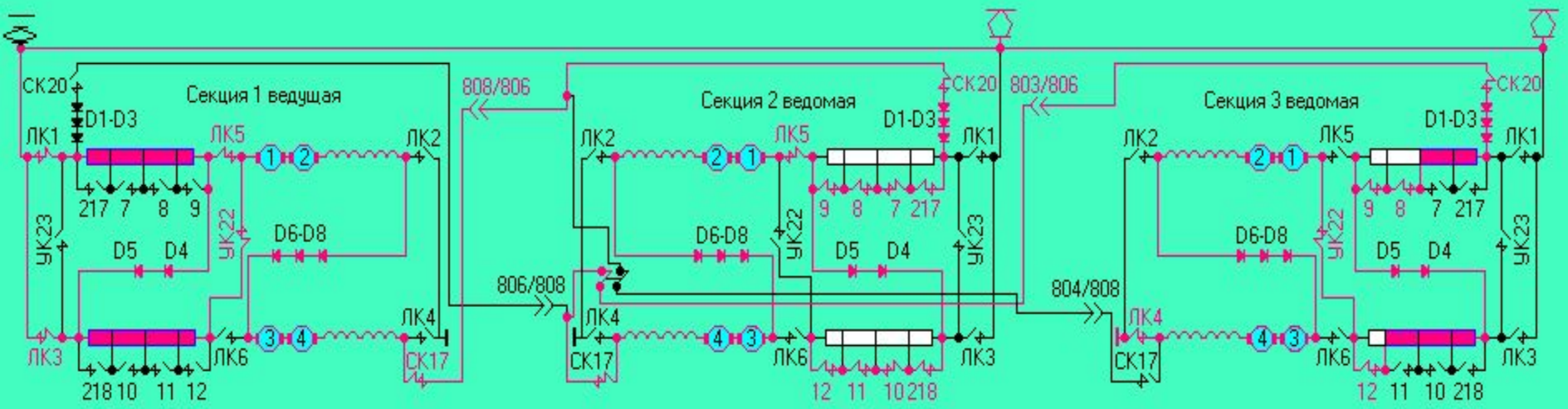


| № Поз | Линейные (ЛК) 1 | 2 | 3 | 4 | 5 | 6 | Реостатные (РК) 217 | 7 | 8 | 9 | 218 | 10 | 11 | 12 | 22 | 17 | 20 | УК 23 | 24 |
|---|---|---|---|---|---|---|---|---|---|---|---|---|---|---|---|---|---|---|---|
| 1 | ● | | | | | | | | | | | | | | ● | ● | | | |
| 2 | ● | | | | | | | | | | | | | | ● | ● | | | |
| 3 | ● | | | | | | | | | ● | | | | | ● | ● | | | |
| 4 | ● | | | | | | | | | ● | | | | | ● | ● | | | |
| 5 | ● | | | | | | | | ● | ● | | | | | ● | ● | | | |
| 6 | ● | | | | | | | | ● | ● | | | | | ● | ● | | | |
| 7 | ● | | ● | | | | | | | | | | | | ● | ● | | | |
| 8 | ● | | ● | | ● | | | | | | | | | | ● | ● | | | |
| 9 | ● | | ● | | ● | | | | | | | | | | ● | ● | | | |
| 10 | ● | | ● | | ● | | | | | | | | | | ● | ● | | | |
| 11 | ● | | ● | | ● | | | | | ● | | | | | ● | ● | | | |
| 12 | ● | | ● | | ● | | | | | ● | | | | | ● | ● | | | |
| 13 | ● | | ● | | ● | | | | | ● | | | | ● | ● | ● | | | |
| 14 | ● | | ● | | ● | | | | ● | ● | | | | ● | ● | ● | | | |
| 15 | ● | | ● | | ● | | | | ● | ● | | | | ● | ● | ● | | | |
| 16 | ● | | ● | | ● | | | | ● | ● | | | ● | ● | ● | ● | | | |
| 17 | ● | | ● | | ● | | | | ● | ● | | | ● | ● | ● | ● | | | |
| 18 | ● | | ● | | ● | | | ● | ● | ● | | | ● | ● | ● | ● | | | |
| 19 | ● | | ● | | ● | | | ● | ● | ● | | | ● | ● | ● | ● | | | |
| 20 | ● | | ● | | ● | | | ● | ● | ● | | ● | ● | ● | ● | ● | | | |
| 21 | ● | | ● | | ● | | | ● | ● | ● | | ● | ● | ● | ● | ● | | | |
| ХП | ● | | ● | | ● | | ● | ● | ● | ● | ● | ● | ● | ● | ● | ● | | | |

| № Поз | Линейные (ЛК) 1 | 2 | 3 | 4 | 5 | 6 | Реостатные (РК) 217 | 7 | 8 | 9 | 218 | 10 | 11 | 12 | 22 | 17 | 20 | УК 23 | 24 |
|---|---|---|---|---|---|---|---|---|---|---|---|---|---|---|---|---|---|---|---|
| 1 | | | | | ● | | ● | ● | ● | ● | ● | ● | ● | ● | | ● | ● | | |
| 2 | | | | | ● | | ● | ● | ● | ● | ● | ● | ● | ● | | ● | ● | | |
| 3 | | | | | ● | | ● | ● | ● | ● | ● | ● | ● | ● | | ● | ● | | |
| 4 | | | | | ● | | ● | ● | ● | ● | ● | ● | ● | ● | | ● | ● | | |
| 5 | | | | | ● | | ● | ● | ● | ● | ● | ● | ● | ● | | ● | ● | | |
| 6 | | | | | ● | | ● | ● | ● | ● | ● | ● | ● | ● | | ● | ● | | |
| 7 | | | | | ● | | ● | ● | ● | ● | ● | ● | ● | ● | | ● | ● | | |
| 8 | | | | | ● | | ● | ● | ● | ● | ● | ● | ● | ● | | ● | ● | | |
| 9 | | | | | ● | | ● | ● | ● | ● | ● | ● | ● | ● | | ● | ● | | |
| 10 | | | | | ● | | ● | ● | ● | ● | ● | ● | ● | ● | | ● | ● | | |
| 11 | | | | | ● | | ● | ● | ● | ● | ● | ● | ● | ● | | ● | ● | | |
| 12 | | | | | ● | | ● | ● | ● | ● | ● | ● | ● | ● | | ● | ● | | |
| 13 | | | | | ● | | ● | ● | ● | ● | ● | ● | ● | ● | | ● | ● | | |
| 14 | | | | | ● | | ● | ● | ● | ● | ● | ● | ● | ● | | ● | ● | | |
| 15 | | | | | ● | | ● | ● | ● | ● | ● | ● | ● | ● | | ● | ● | | |
| 16 | | | | | ● | | ● | ● | ● | ● | ● | ● | ● | ● | | ● | ● | | |
| 17 | | | | | ● | | ● | ● | ● | ● | ● | ● | ● | ● | | ● | ● | | |
| 18 | | | | | ● | | ● | ● | ● | ● | ● | ● | ● | ● | | ● | ● | | |
| 19 | | | | | ● | | ● | ● | ● | ● | ● | ● | ● | ● | | ● | ● | | |
| 20 | | | | | ● | | ● | ● | ● | ● | ● | ● | ● | ● | | ● | ● | | |
| 21 | | | | | ● | | ● | ● | ● | ● | ● | ● | ● | ● | | ● | ● | | |
| ХП | | | | | ● | | ● | ● | ● | ● | ● | ● | ● | ● | | ● | ● | | |

| № Поз | Линейные (ЛК) 1 | 2 | 3 | 4 | 5 | 6 | Реостатные (РК) 217 | 7 | 8 | 9 | 218 | 10 | 11 | 12 | 22 | 17 | 20 | УК 23 | 24 |
|---|---|---|---|---|---|---|---|---|---|---|---|---|---|---|---|---|---|---|---|
| 1 | | | | ● | | | | | | | | | | | ● | | ● | | |
| 2 | | | | ● | | | | | | ● | | | | | ● | | ● | | |
| 3 | | | | ● | | | | | | ● | | | | | ● | | ● | | |
| 4 | | | | ● | | | | | ● | ● | | | | | ● | | ● | | |
| 5 | | | | ● | | | | | ● | ● | | | | | ● | | ● | | |
| 6 | | | | ● | | | | | ● | ● | | | | ● | ● | | ● | | |
| 7 | | | | ● | | | | | ● | ● | | | | ● | ● | | ● | | |
| 8 | | | | ● | | | | | ● | ● | | | | ● | ● | | ● | | |
| 9 | | | | ● | | | | | ● | ● | | | | ● | ● | | ● | ● | |
| 10 | | | | ● | ● | | | | | ● | | | | ● | ● | | ● | ● | |
| 11 | | | | ● | ● | | | | | ● | | | | ● | ● | | ● | ● | |
| 12 | | | | ● | ● | | | | ● | ● | | | | ● | ● | | ● | ● | |
| 13 | | | | ● | ● | | | | ● | ● | | | | ● | ● | | ● | ● | |
| 14 | | | | ● | ● | | | | ● | ● | | | | ● | ● | | ● | ● | |
| 15 | | | | ● | ● | | | | ● | ● | | | ● | ● | ● | | ● | ● | |
| 16 | | | | ● | ● | | | | ● | ● | | | ● | ● | ● | | ● | ● | |
| 17 | | | | ● | ● | | | ● | ● | ● | | | ● | ● | ● | | ● | ● | |
| 18 | | | | ● | ● | | | ● | ● | ● | | | ● | ● | ● | | ● | ● | |
| 19 | | | | ● | ● | | | ● | ● | ● | | ● | ● | ● | ● | | ● | ● | |
| 20 | | | | ● | ● | | | ● | ● | ● | | ● | ● | ● | ● | | ● | ● | |
| 21 | | | | ● | ● | | ● | ● | ● | ● | ● | ● | ● | ● | ● | | ● | ● | |
| ХП | | | | ● | ● | | ● | ● | ● | ● | ● | ● | ● | ● | ● | | ● | ● | |

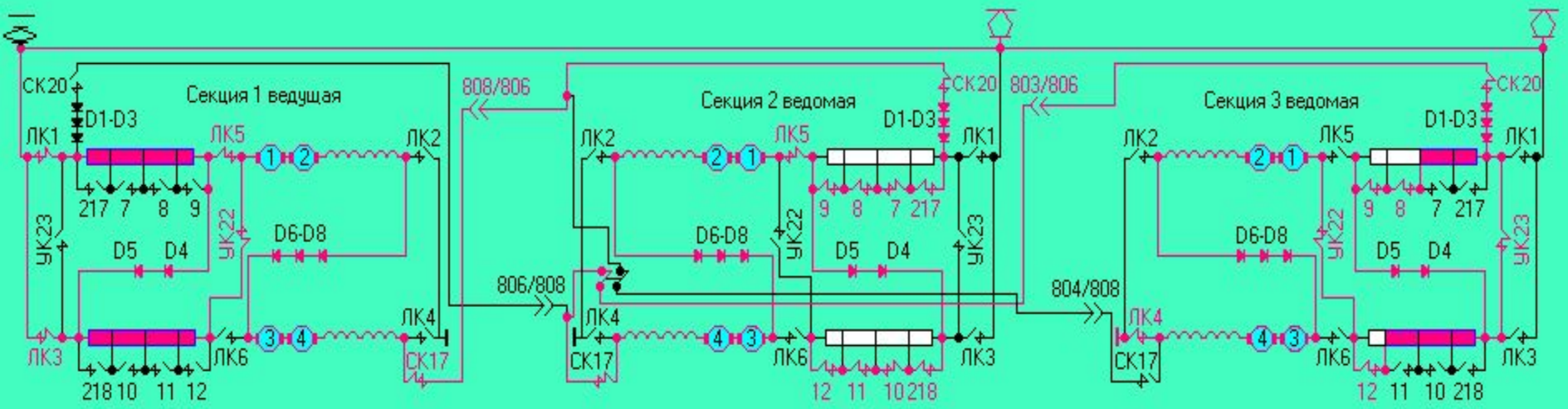


| № Поз | Линейные (ЛК) 1 | 2 | 3 | 4 | 5 | 6 | Реостатные (РК) 217 | 7 | 8 | 9 | 218 | 10 | 11 | 12 | 22 | 17 | 20 | УК 23 | 24 |
|---|---|---|---|---|---|---|---|---|---|---|---|---|---|---|---|---|---|---|---|
| 1 | ● | | | | | | | | | | | | | | ● | ● | | | |
| 2 | ● | | | | | | | | | | | | | | ● | ● | | | |
| 3 | ● | | | | | | | | | ● | | | | | ● | ● | | | |
| 4 | ● | | | | | | | | | ● | | | | | ● | ● | | | |
| 5 | ● | | | | | | | | ● | ● | | | | | ● | ● | | | |
| 6 | ● | | | | | | | | ● | ● | | | | | ● | ● | | | |
| 7 | ● | | ● | | | | | | | | | | | | ● | ● | | | |
| 8 | ● | | ● | | ● | | | | | | | | | | ● | ● | | | |
| 9 | ● | | ● | | ● | | | | | | | | | | ● | ● | | | |
| 10 | ● | | ● | | ● | | | | | | | | | | ● | ● | | | |
| 11 | ● | | ● | | ● | | | | | ● | | | | | ● | ● | | | |
| 12 | ● | | ● | | ● | | | | | ● | | | | | ● | ● | | | |
| 13 | ● | | ● | | ● | | | | | ● | | | | ● | ● | ● | | | |
| 14 | ● | | ● | | ● | | | | ● | ● | | | | ● | ● | ● | | | |
| 15 | ● | | ● | | ● | | | | ● | ● | | | | ● | ● | ● | | | |
| 16 | ● | | ● | | ● | | | | ● | ● | | | ● | ● | ● | ● | | | |
| 17 | ● | | ● | | ● | | | | ● | ● | | | ● | ● | ● | ● | | | |
| 18 | ● | | ● | | ● | | | ● | ● | ● | | | ● | ● | ● | ● | | | |
| 19 | ● | | ● | | ● | | | ● | ● | ● | | | ● | ● | ● | ● | | | |
| 20 | ● | | ● | | ● | | | ● | ● | ● | | ● | ● | ● | ● | ● | | | |
| 21 | ● | | ● | | ● | | | ● | ● | ● | | ● | ● | ● | ● | ● | | | |
| ХП | ● | | ● | | ● | | ● | ● | ● | ● | ● | ● | ● | ● | ● | ● | | | |

| № Поз | Линейные (ЛК) 1 | 2 | 3 | 4 | 5 | 6 | Реостатные (РК) 217 | 7 | 8 | 9 | 218 | 10 | 11 | 12 | 22 | 17 | 20 | УК 23 | 24 |
|---|---|---|---|---|---|---|---|---|---|---|---|---|---|---|---|---|---|---|---|
| 1 | | | | | ● | | ● | ● | ● | ● | ● | ● | ● | ● | | ● | ● | | |
| 2 | | | | | ● | | ● | ● | ● | ● | ● | ● | ● | ● | | ● | ● | | |
| 3 | | | | | ● | | ● | ● | ● | ● | ● | ● | ● | ● | | ● | ● | | |
| 4 | | | | | ● | | ● | ● | ● | ● | ● | ● | ● | ● | | ● | ● | | |
| 5 | | | | | ● | | ● | ● | ● | ● | ● | ● | ● | ● | | ● | ● | | |
| 6 | | | | | ● | | ● | ● | ● | ● | ● | ● | ● | ● | | ● | ● | | |
| 7 | | | | | ● | | ● | ● | ● | ● | ● | ● | ● | ● | | ● | ● | | |
| 8 | | | | | ● | | ● | ● | ● | ● | ● | ● | ● | ● | | ● | ● | | |
| 9 | | | | | ● | | ● | ● | ● | ● | ● | ● | ● | ● | | ● | ● | | |
| 10 | | | | | ● | | ● | ● | ● | ● | ● | ● | ● | ● | | ● | ● | | |
| 11 | | | | | ● | | ● | ● | ● | ● | ● | ● | ● | ● | | ● | ● | | |
| 12 | | | | | ● | | ● | ● | ● | ● | ● | ● | ● | ● | | ● | ● | | |
| 13 | | | | | ● | | ● | ● | ● | ● | ● | ● | ● | ● | | ● | ● | | |
| 14 | | | | | ● | | ● | ● | ● | ● | ● | ● | ● | ● | | ● | ● | | |
| 15 | | | | | ● | | ● | ● | ● | ● | ● | ● | ● | ● | | ● | ● | | |
| 16 | | | | | ● | | ● | ● | ● | ● | ● | ● | ● | ● | | ● | ● | | |
| 17 | | | | | ● | | ● | ● | ● | ● | ● | ● | ● | ● | | ● | ● | | |
| 18 | | | | | ● | | ● | ● | ● | ● | ● | ● | ● | ● | | ● | ● | | |
| 19 | | | | | ● | | ● | ● | ● | ● | ● | ● | ● | ● | | ● | ● | | |
| 20 | | | | | ● | | ● | ● | ● | ● | ● | ● | ● | ● | | ● | ● | | |
| 21 | | | | | ● | | ● | ● | ● | ● | ● | ● | ● | ● | | ● | ● | | |
| ХП | | | | | ● | | ● | ● | ● | ● | ● | ● | ● | ● | | ● | ● | | |

| № Поз | Линейные (ЛК) 1 | 2 | 3 | 4 | 5 | 6 | Реостатные (РК) 217 | 7 | 8 | 9 | 218 | 10 | 11 | 12 | 22 | 17 | 20 | УК 23 | 24 |
|---|---|---|---|---|---|---|---|---|---|---|---|---|---|---|---|---|---|---|---|
| 1 | | | | ● | | | | | | | | | | | ● | | ● | | |
| 2 | | | | ● | | | | | | ● | | | | | ● | | ● | | |
| 3 | | | | ● | | | | | | ● | | | | | ● | | ● | | |
| 4 | | | | ● | | | | | ● | ● | | | | | ● | | ● | | |
| 5 | | | | ● | | | | | ● | ● | | | | | ● | | ● | | |
| 6 | | | | ● | | | | | ● | ● | | | | ● | ● | | ● | | |
| 7 | | | | ● | | | | | ● | ● | | | | ● | ● | | ● | | |
| 8 | | | | ● | | | | | ● | ● | | | | ● | ● | | ● | | |
| 9 | | | | ● | | | | | ● | ● | | | | ● | ● | | ● | ● | |
| 10 | | | | ● | ● | | | | | ● | | | | ● | ● | | ● | ● | |
| 11 | | | | ● | ● | | | | | ● | | | | ● | ● | | ● | ● | |
| 12 | | | | ● | ● | | | | ● | ● | | | | ● | ● | | ● | ● | |
| 13 | | | | ● | ● | | | | ● | ● | | | | ● | ● | | ● | ● | |
| 14 | | | | ● | ● | | | | ● | ● | | | | ● | ● | | ● | ● | |
| 15 | | | | ● | ● | | | | ● | ● | | | ● | ● | ● | | ● | ● | |
| 16 | | | | ● | ● | | | | ● | ● | | | ● | ● | ● | | ● | ● | |
| 17 | | | | ● | ● | | | ● | ● | ● | | | ● | ● | ● | | ● | ● | |
| 18 | | | | ● | ● | | | ● | ● | ● | | | ● | ● | ● | | ● | ● | |
| 19 | | | | ● | ● | | | ● | ● | ● | | ● | ● | ● | ● | | ● | ● | |
| 20 | | | | ● | ● | | | ● | ● | ● | | ● | ● | ● | ● | | ● | ● | |
| 21 | | | | ● | ● | | ● | ● | ● | ● | ● | ● | ● | ● | ● | | ● | ● | |
| ХП | | | | ● | ● | | ● | ● | ● | ● | ● | ● | ● | ● | ● | | ● | ● | |

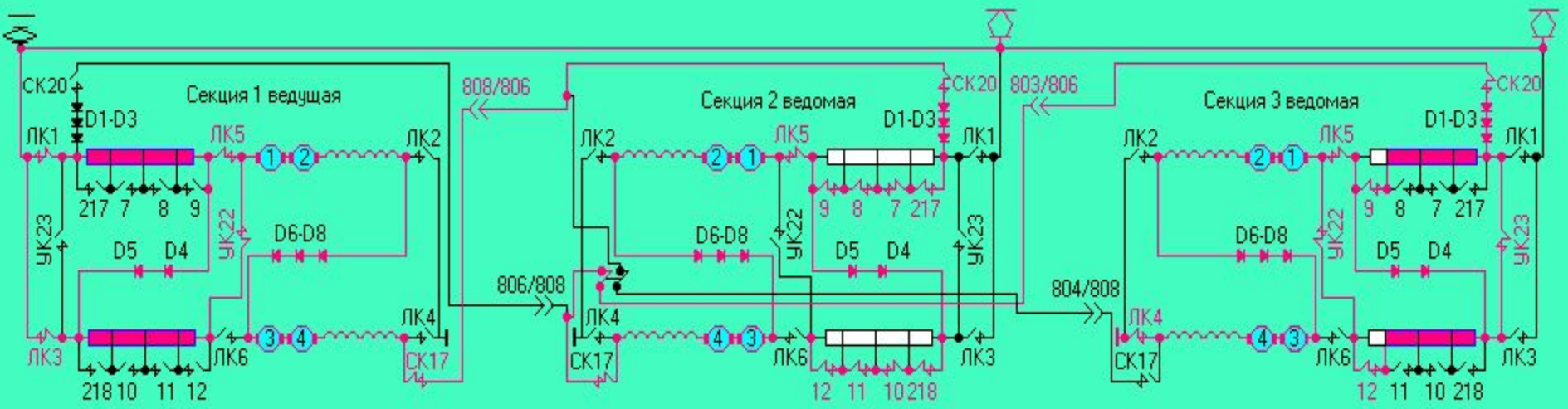


| № Поз | Линейные (ЛК) 1 | 2 | 3 | 4 | 5 | 6 | Реостатные (РК) 217 | 7 | 8 | 9 | 218 | 10 | 11 | 12 | 22 | 17 | 20 | УК 23 | 24 |
|---|---|---|---|---|---|---|---|---|---|---|---|---|---|---|---|---|---|---|---|
| 1 | ● | | | | | | | | | | | | | | ● | ● | | | |
| 2 | ● | | | | | | | | | | | | | | ● | ● | | | |
| 3 | ● | | | | | | | | | ● | | | | | ● | ● | | | |
| 4 | ● | | | | | | | | | ● | | | | | ● | ● | | | |
| 5 | ● | | | | | | | | ● | ● | | | | | ● | ● | | | |
| 6 | ● | | | | | | | | ● | ● | | | | | ● | ● | | | |
| 7 | ● | | ● | | | | | | | | | | | | ● | ● | | | |
| 8 | ● | | ● | | ● | | | | | | | | | | ● | ● | | | |
| 9 | ● | | ● | | ● | | | | | | | | | | ● | ● | | | |
| 10 | ● | | ● | | ● | | | | | | | | | | ● | ● | | | |
| 11 | ● | | ● | | ● | | | | | ● | | | | | ● | ● | | | |
| 12 | ● | | ● | | ● | | | | | ● | | | | | ● | ● | | | |
| 13 | ● | | ● | | ● | | | | | ● | | | | ● | ● | ● | | | |
| 14 | ● | | ● | | ● | | | | ● | ● | | | | ● | ● | ● | | | |
| 15 | ● | | ● | | ● | | | | ● | ● | | | | ● | ● | ● | | | |
| 16 | ● | | ● | | ● | | | | ● | ● | | | ● | ● | ● | ● | | | |
| 17 | ● | | ● | | ● | | | | ● | ● | | | ● | ● | ● | ● | | | |
| 18 | ● | | ● | | ● | | | ● | ● | ● | | | ● | ● | ● | ● | | | |
| 19 | ● | | ● | | ● | | | ● | ● | ● | | | ● | ● | ● | ● | | | |
| 20 | ● | | ● | | ● | | | ● | ● | ● | | ● | ● | ● | ● | ● | | | |
| 21 | ● | | ● | | ● | | | ● | ● | ● | | ● | ● | ● | ● | ● | | | |
| ХП | ● | | ● | | ● | | ● | ● | ● | ● | ● | ● | ● | ● | ● | ● | | | |

| № Поз | Линейные (ЛК) 1 | 2 | 3 | 4 | 5 | 6 | Реостатные (РК) 217 | 7 | 8 | 9 | 218 | 10 | 11 | 12 | 22 | 17 | 20 | УК 23 | 24 |
|---|---|---|---|---|---|---|---|---|---|---|---|---|---|---|---|---|---|---|---|
| 1 | | | | | ● | | ● | ● | ● | ● | ● | ● | ● | ● | | ● | ● | | |
| 2 | | | | | ● | | ● | ● | ● | ● | ● | ● | ● | ● | | ● | ● | | |
| 3 | | | | | ● | | ● | ● | ● | ● | ● | ● | ● | ● | | ● | ● | | |
| 4 | | | | | ● | | ● | ● | ● | ● | ● | ● | ● | ● | | ● | ● | | |
| 5 | | | | | ● | | ● | ● | ● | ● | ● | ● | ● | ● | | ● | ● | | |
| 6 | | | | | ● | | ● | ● | ● | ● | ● | ● | ● | ● | | ● | ● | | |
| 7 | | | | | ● | | ● | ● | ● | ● | ● | ● | ● | ● | | ● | ● | | |
| 8 | | | | | ● | | ● | ● | ● | ● | ● | ● | ● | ● | | ● | ● | | |
| 9 | | | | | ● | | ● | ● | ● | ● | ● | ● | ● | ● | | ● | ● | | |
| 10 | | | | | ● | | ● | ● | ● | ● | ● | ● | ● | ● | | ● | ● | | |
| 11 | | | | | ● | | ● | ● | ● | ● | ● | ● | ● | ● | | ● | ● | | |
| 12 | | | | | ● | | ● | ● | ● | ● | ● | ● | ● | ● | | ● | ● | | |
| 13 | | | | | ● | | ● | ● | ● | ● | ● | ● | ● | ● | | ● | ● | | |
| 14 | | | | | ● | | ● | ● | ● | ● | ● | ● | ● | ● | | ● | ● | | |
| 15 | | | | | ● | | ● | ● | ● | ● | ● | ● | ● | ● | | ● | ● | | |
| 16 | | | | | ● | | ● | ● | ● | ● | ● | ● | ● | ● | | ● | ● | | |
| 17 | | | | | ● | | ● | ● | ● | ● | ● | ● | ● | ● | | ● | ● | | |
| 18 | | | | | ● | | ● | ● | ● | ● | ● | ● | ● | ● | | ● | ● | | |
| 19 | | | | | ● | | ● | ● | ● | ● | ● | ● | ● | ● | | ● | ● | | |
| 20 | | | | | ● | | ● | ● | ● | ● | ● | ● | ● | ● | | ● | ● | | |
| 21 | | | | | ● | | ● | ● | ● | ● | ● | ● | ● | ● | | ● | ● | | |
| ХП | | | | | ● | | ● | ● | ● | ● | ● | ● | ● | ● | | ● | ● | | |

| № Поз | Линейные (ЛК) 1 | 2 | 3 | 4 | 5 | 6 | Реостатные (РК) 217 | 7 | 8 | 9 | 218 | 10 | 11 | 12 | 22 | 17 | 20 | УК 23 | 24 |
|---|---|---|---|---|---|---|---|---|---|---|---|---|---|---|---|---|---|---|---|
| 1 | | | | ● | | | | | | | | | | | ● | | ● | | |
| 2 | | | | ● | | | | | | ● | | | | | ● | | ● | | |
| 3 | | | | ● | | | | | | ● | | | | | ● | | ● | | |
| 4 | | | | ● | | | | | ● | ● | | | | | ● | | ● | | |
| 5 | | | | ● | | | | | ● | ● | | | | | ● | | ● | | |
| 6 | | | | ● | | | | | ● | ● | | | | ● | ● | | ● | | |
| 7 | | | | ● | | | | | ● | ● | | | | ● | ● | | ● | | |
| 8 | | | | ● | | | | | ● | ● | | | | ● | ● | | ● | | |
| 9 | | | | ● | | | | | ● | ● | | | | ● | ● | | ● | ● | |
| 10 | | | | ● | ● | | | | | ● | | | | ● | ● | | ● | ● | |
| 11 | | | | ● | ● | | | | | ● | | | | ● | ● | | ● | ● | |
| 12 | | | | ● | ● | | | | ● | ● | | | | ● | ● | | ● | ● | |
| 13 | | | | ● | ● | | | | ● | ● | | | | ● | ● | | ● | ● | |
| 14 | | | | ● | ● | | | | ● | ● | | | | ● | ● | | ● | ● | |
| 15 | | | | ● | ● | | | | ● | ● | | | ● | ● | ● | | ● | ● | |
| 16 | | | | ● | ● | | | | ● | ● | | | ● | ● | ● | | ● | ● | |
| 17 | | | | ● | ● | | | ● | ● | ● | | | ● | ● | ● | | ● | ● | |
| 18 | | | | ● | ● | | | ● | ● | ● | | | ● | ● | ● | | ● | ● | |
| 19 | | | | ● | ● | | | ● | ● | ● | | ● | ● | ● | ● | | ● | ● | |
| 20 | | | | ● | ● | | | ● | ● | ● | | ● | ● | ● | ● | | ● | ● | |
| 21 | | | | ● | ● | | ● | ● | ● | ● | ● | ● | ● | ● | ● | | ● | ● | |
| ХП | | | | ● | ● | | ● | ● | ● | ● | ● | ● | ● | ● | ● | | ● | ● | |

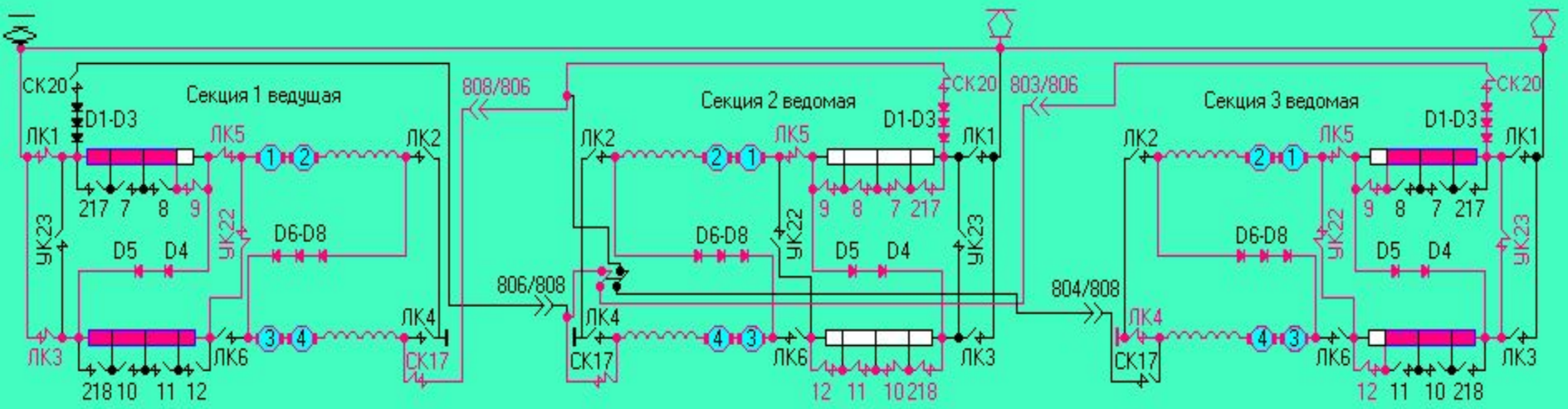


| № Поз | Линейные (ЛК) 1 | 2 | 3 | 4 | 5 | 6 | Реостатные (РК) 217 | 7 | 8 | 9 | 218 | 10 | 11 | 12 | 22 | 17 | 20 | УК 23 | 24 |
|---|---|---|---|---|---|---|---|---|---|---|---|---|---|---|---|---|---|---|---|
| 1 | ● | | | | | | | | | | | | | | ● | ● | | | |
| 2 | ● | | | | | | | | | | | | | | ● | ● | | | |
| 3 | ● | | | | | | | | | ● | | | | | ● | ● | | | |
| 4 | ● | | | | | | | | | ● | | | | | ● | ● | | | |
| 5 | ● | | | | | | | | ● | ● | | | | | ● | ● | | | |
| 6 | ● | | | | | | | | ● | ● | | | | | ● | ● | | | |
| 7 | ● | | ● | | | | | | | | | | | | ● | ● | | | |
| 8 | ● | | ● | | ● | | | | | | | | | | ● | ● | | | |
| 9 | ● | | ● | | ● | | | | | | | | | | ● | ● | | | |
| 10 | ● | | ● | | ● | | | | | | | | | | ● | ● | | | |
| 11 | ● | | ● | | ● | | | | | ● | | | | | ● | ● | | | |
| 12 | ● | | ● | | ● | | | | | ● | | | | | ● | ● | | | |
| 13 | ● | | ● | | ● | | | | | ● | | | | ● | ● | ● | | | |
| 14 | ● | | ● | | ● | | | | ● | ● | | | | ● | ● | ● | | | |
| 15 | ● | | ● | | ● | | | | ● | ● | | | | ● | ● | ● | | | |
| 16 | ● | | ● | | ● | | | | ● | ● | | | ● | ● | ● | ● | | | |
| 17 | ● | | ● | | ● | | | | ● | ● | | | ● | ● | ● | ● | | | |
| 18 | ● | | ● | | ● | | | ● | ● | ● | | | ● | ● | ● | ● | | | |
| 19 | ● | | ● | | ● | | | ● | ● | ● | | | ● | ● | ● | ● | | | |
| 20 | ● | | ● | | ● | | | ● | ● | ● | | ● | ● | ● | ● | ● | | | |
| 21 | ● | | ● | | ● | | | ● | ● | ● | | ● | ● | ● | ● | ● | | | |
| ХП | ● | | ● | | ● | | ● | ● | ● | ● | ● | ● | ● | ● | ● | ● | | | |

| № Поз | Линейные (ЛК) 1 | 2 | 3 | 4 | 5 | 6 | Реостатные (РК) 217 | 7 | 8 | 9 | 218 | 10 | 11 | 12 | 22 | 17 | 20 | УК 23 | 24 |
|---|---|---|---|---|---|---|---|---|---|---|---|---|---|---|---|---|---|---|---|
| 1 | | | | | ● | | ● | ● | ● | ● | ● | ● | ● | ● | | ● | ● | | |
| 2 | | | | | ● | | ● | ● | ● | ● | ● | ● | ● | ● | | ● | ● | | |
| 3 | | | | | ● | | ● | ● | ● | ● | ● | ● | ● | ● | | ● | ● | | |
| 4 | | | | | ● | | ● | ● | ● | ● | ● | ● | ● | ● | | ● | ● | | |
| 5 | | | | | ● | | ● | ● | ● | ● | ● | ● | ● | ● | | ● | ● | | |
| 6 | | | | | ● | | ● | ● | ● | ● | ● | ● | ● | ● | | ● | ● | | |
| 7 | | | | | ● | | ● | ● | ● | ● | ● | ● | ● | ● | | ● | ● | | |
| 8 | | | | | ● | | ● | ● | ● | ● | ● | ● | ● | ● | | ● | ● | | |
| 9 | | | | | ● | | ● | ● | ● | ● | ● | ● | ● | ● | | ● | ● | | |
| 10 | | | | | ● | | ● | ● | ● | ● | ● | ● | ● | ● | | ● | ● | | |
| 11 | | | | | ● | | ● | ● | ● | ● | ● | ● | ● | ● | | ● | ● | | |
| 12 | | | | | ● | | ● | ● | ● | ● | ● | ● | ● | ● | | ● | ● | | |
| 13 | | | | | ● | | ● | ● | ● | ● | ● | ● | ● | ● | | ● | ● | | |
| 14 | | | | | ● | | ● | ● | ● | ● | ● | ● | ● | ● | | ● | ● | | |
| 15 | | | | | ● | | ● | ● | ● | ● | ● | ● | ● | ● | | ● | ● | | |
| 16 | | | | | ● | | ● | ● | ● | ● | ● | ● | ● | ● | | ● | ● | | |
| 17 | | | | | ● | | ● | ● | ● | ● | ● | ● | ● | ● | | ● | ● | | |
| 18 | | | | | ● | | ● | ● | ● | ● | ● | ● | ● | ● | | ● | ● | | |
| 19 | | | | | ● | | ● | ● | ● | ● | ● | ● | ● | ● | | ● | ● | | |
| 20 | | | | | ● | | ● | ● | ● | ● | ● | ● | ● | ● | | ● | ● | | |
| 21 | | | | | ● | | ● | ● | ● | ● | ● | ● | ● | ● | | ● | ● | | |
| ХП | | | | | ● | | ● | ● | ● | ● | ● | ● | ● | ● | | ● | ● | | |

| № Поз | Линейные (ЛК) 1 | 2 | 3 | 4 | 5 | 6 | Реостатные (РК) 217 | 7 | 8 | 9 | 218 | 10 | 11 | 12 | 22 | 17 | 20 | УК 23 | 24 |
|---|---|---|---|---|---|---|---|---|---|---|---|---|---|---|---|---|---|---|---|
| 1 | | | | ● | | | | | | | | | | | ● | | ● | | |
| 2 | | | | ● | | | | | | ● | | | | | ● | | ● | | |
| 3 | | | | ● | | | | | | ● | | | | | ● | | ● | | |
| 4 | | | | ● | | | | | ● | ● | | | | | ● | | ● | | |
| 5 | | | | ● | | | | | ● | ● | | | | | ● | | ● | | |
| 6 | | | | ● | | | | | ● | ● | | | | ● | ● | | ● | | |
| 7 | | | | ● | | | | | ● | ● | | | | ● | ● | | ● | | |
| 8 | | | | ● | | | | | ● | ● | | | | ● | ● | | ● | | |
| 9 | | | | ● | | | | | ● | ● | | | | ● | ● | | ● | ● | |
| 10 | | | | ● | ● | | | | | ● | | | | ● | ● | | ● | ● | |
| 11 | | | | ● | ● | | | | | ● | | | | ● | ● | | ● | ● | |
| 12 | | | | ● | ● | | | | ● | ● | | | | ● | ● | | ● | ● | |
| 13 | | | | ● | ● | | | | ● | ● | | | | ● | ● | | ● | ● | |
| 14 | | | | ● | ● | | | | ● | ● | | | | ● | ● | | ● | ● | |
| 15 | | | | ● | ● | | | | ● | ● | | | ● | ● | ● | | ● | ● | |
| 16 | | | | ● | ● | | | | ● | ● | | | ● | ● | ● | | ● | ● | |
| 17 | | | | ● | ● | | | ● | ● | ● | | | ● | ● | ● | | ● | ● | |
| 18 | | | | ● | ● | | | ● | ● | ● | | | ● | ● | ● | | ● | ● | |
| 19 | | | | ● | ● | | | ● | ● | ● | | ● | ● | ● | ● | | ● | ● | |
| 20 | | | | ● | ● | | | ● | ● | ● | | ● | ● | ● | ● | | ● | ● | |
| 21 | | | | ● | ● | | ● | ● | ● | ● | ● | ● | ● | ● | ● | | ● | ● | |
| ХП | | | | ● | ● | | ● | ● | ● | ● | ● | ● | ● | ● | ● | | ● | ● | |

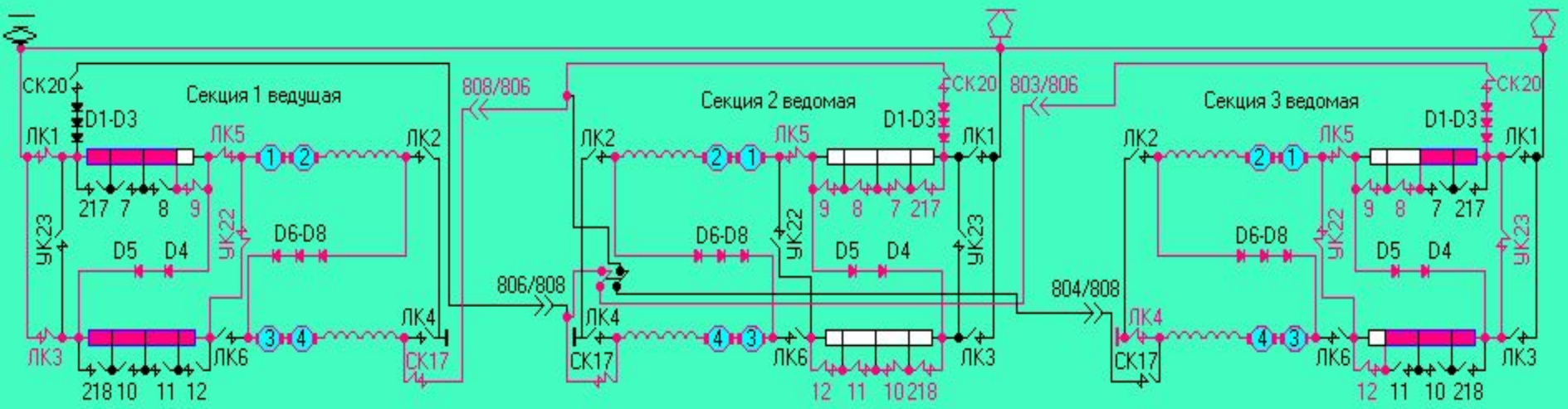


| № Поз | Линейные (ЛК) 1 | 2 | 3 | 4 | 5 | 6 | Реостатные (РК) 217 | 7 | 8 | 9 | 218 | 10 | 11 | 12 | 22 | 17 | 20 | УК 23 | 24 |
|---|---|---|---|---|---|---|---|---|---|---|---|---|---|---|---|---|---|---|---|
| 1 | ● | | | | | | | | | | | | | | ● | ● | | | |
| 2 | ● | | | | | | | | | | | | | | ● | ● | | | |
| 3 | ● | | | | | | | | | ● | | | | | ● | ● | | | |
| 4 | ● | | | | | | | | | ● | | | | | ● | ● | | | |
| 5 | ● | | | | | | | | ● | ● | | | | | ● | ● | | | |
| 6 | ● | | | | | | | | ● | ● | | | | | ● | ● | | | |
| 7 | ● | | ● | | | | | | | | | | | | ● | ● | | | |
| 8 | ● | | ● | | ● | | | | | | | | | | ● | ● | | | |
| 9 | ● | | ● | | ● | | | | | | | | | | ● | ● | | | |
| 10 | ● | | ● | | ● | | | | | | | | | | ● | ● | | | |
| 11 | ● | | ● | | ● | | | | | ● | | | | | ● | ● | | | |
| 12 | ● | | ● | | ● | | | | | ● | | | | | ● | ● | | | |
| 13 | ● | | ● | | ● | | | | | ● | | | | ● | ● | ● | | | |
| 14 | ● | | ● | | ● | | | | ● | ● | | | | ● | ● | ● | | | |
| 15 | ● | | ● | | ● | | | | ● | ● | | | | ● | ● | ● | | | |
| 16 | ● | | ● | | ● | | | | ● | ● | | | ● | ● | ● | ● | | | |
| 17 | ● | | ● | | ● | | | | ● | ● | | | ● | ● | ● | ● | | | |
| 18 | ● | | ● | | ● | | | ● | ● | ● | | | ● | ● | ● | ● | | | |
| 19 | ● | | ● | | ● | | | ● | ● | ● | | | ● | ● | ● | ● | | | |
| 20 | ● | | ● | | ● | | | ● | ● | ● | | ● | ● | ● | ● | ● | | | |
| 21 | ● | | ● | | ● | | | ● | ● | ● | | ● | ● | ● | ● | ● | | | |
| ХП | ● | | ● | | ● | | ● | ● | ● | ● | ● | ● | ● | ● | ● | ● | | | |

| № Поз | Линейные (ЛК) 1 | 2 | 3 | 4 | 5 | 6 | Реостатные (РК) 217 | 7 | 8 | 9 | 218 | 10 | 11 | 12 | 22 | 17 | 20 | УК 23 | 24 |
|---|---|---|---|---|---|---|---|---|---|---|---|---|---|---|---|---|---|---|---|
| 1 | | | | | ● | | ● | ● | ● | ● | ● | ● | ● | ● | | ● | ● | | |
| 2 | | | | | ● | | ● | ● | ● | ● | ● | ● | ● | ● | | ● | ● | | |
| 3 | | | | | ● | | ● | ● | ● | ● | ● | ● | ● | ● | | ● | ● | | |
| 4 | | | | | ● | | ● | ● | ● | ● | ● | ● | ● | ● | | ● | ● | | |
| 5 | | | | | ● | | ● | ● | ● | ● | ● | ● | ● | ● | | ● | ● | | |
| 6 | | | | | ● | | ● | ● | ● | ● | ● | ● | ● | ● | | ● | ● | | |
| 7 | | | | | ● | | ● | ● | ● | ● | ● | ● | ● | ● | | ● | ● | | |
| 8 | | | | | ● | | ● | ● | ● | ● | ● | ● | ● | ● | | ● | ● | | |
| 9 | | | | | ● | | ● | ● | ● | ● | ● | ● | ● | ● | | ● | ● | | |
| 10 | | | | | ● | | ● | ● | ● | ● | ● | ● | ● | ● | | ● | ● | | |
| 11 | | | | | ● | | ● | ● | ● | ● | ● | ● | ● | ● | | ● | ● | | |
| 12 | | | | | ● | | ● | ● | ● | ● | ● | ● | ● | ● | | ● | ● | | |
| 13 | | | | | ● | | ● | ● | ● | ● | ● | ● | ● | ● | | ● | ● | | |
| 14 | | | | | ● | | ● | ● | ● | ● | ● | ● | ● | ● | | ● | ● | | |
| 15 | | | | | ● | | ● | ● | ● | ● | ● | ● | ● | ● | | ● | ● | | |
| 16 | | | | | ● | | ● | ● | ● | ● | ● | ● | ● | ● | | ● | ● | | |
| 17 | | | | | ● | | ● | ● | ● | ● | ● | ● | ● | ● | | ● | ● | | |
| 18 | | | | | ● | | ● | ● | ● | ● | ● | ● | ● | ● | | ● | ● | | |
| 19 | | | | | ● | | ● | ● | ● | ● | ● | ● | ● | ● | | ● | ● | | |
| 20 | | | | | ● | | ● | ● | ● | ● | ● | ● | ● | ● | | ● | ● | | |
| 21 | | | | | ● | | ● | ● | ● | ● | ● | ● | ● | ● | | ● | ● | | |
| ХП | | | | | ● | | ● | ● | ● | ● | ● | ● | ● | ● | | ● | ● | | |

| № Поз | Линейные (ЛК) 1 | 2 | 3 | 4 | 5 | 6 | Реостатные (РК) 217 | 7 | 8 | 9 | 218 | 10 | 11 | 12 | 22 | 17 | 20 | УК 23 | 24 |
|---|---|---|---|---|---|---|---|---|---|---|---|---|---|---|---|---|---|---|---|
| 1 | | | | ● | | | | | | | | | | | ● | | ● | | |
| 2 | | | | ● | | | | | | ● | | | | | ● | | ● | | |
| 3 | | | | ● | | | | | | ● | | | | | ● | | ● | | |
| 4 | | | | ● | | | | | ● | ● | | | | | ● | | ● | | |
| 5 | | | | ● | | | | | ● | ● | | | | | ● | | ● | | |
| 6 | | | | ● | | | | | ● | ● | | | | ● | ● | | ● | | |
| 7 | | | | ● | | | | | ● | ● | | | | ● | ● | | ● | | |
| 8 | | | | ● | | | | | ● | ● | | | | ● | ● | | ● | | |
| 9 | | | | ● | | | | | ● | ● | | | | ● | ● | | ● | ● | |
| 10 | | | | ● | ● | | | | | ● | | | | ● | ● | | ● | ● | |
| 11 | | | | ● | ● | | | | | ● | | | | ● | ● | | ● | ● | |
| 12 | | | | ● | ● | | | | ● | ● | | | | ● | ● | | ● | ● | |
| 13 | | | | ● | ● | | | | ● | ● | | | | ● | ● | | ● | ● | |
| 14 | | | | ● | ● | | | | ● | ● | | | | ● | ● | | ● | ● | |
| 15 | | | | ● | ● | | | | ● | ● | | | ● | ● | ● | | ● | ● | |
| 16 | | | | ● | ● | | | | ● | ● | | | ● | ● | ● | | ● | ● | |
| 17 | | | | ● | ● | | | ● | ● | ● | | | ● | ● | ● | | ● | ● | |
| 18 | | | | ● | ● | | | ● | ● | ● | | | ● | ● | ● | | ● | ● | |
| 19 | | | | ● | ● | | | ● | ● | ● | | ● | ● | ● | ● | | ● | ● | |
| 20 | | | | ● | ● | | | ● | ● | ● | | ● | ● | ● | ● | | ● | ● | |
| 21 | | | | ● | ● | | ● | ● | ● | ● | ● | ● | ● | ● | ● | | ● | ● | |
| ХП | | | | ● | ● | | ● | ● | ● | ● | ● | ● | ● | ● | ● | | ● | ● | |

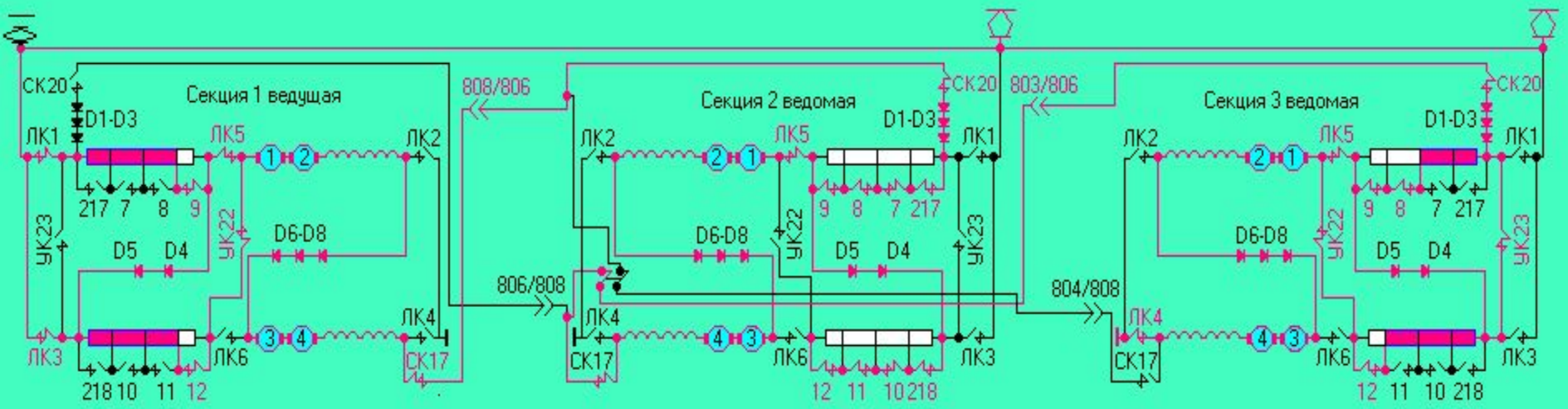


| № Поз | Линейные (ЛК) 1 | 2 | 3 | 4 | 5 | 6 | Реостатные (РК) 217 | 7 | 8 | 9 | 218 | 10 | 11 | 12 | 22 | 17 | 20 | УК 23 | 24 |
|---|---|---|---|---|---|---|---|---|---|---|---|---|---|---|---|---|---|---|---|
| 1 | ● | | | | | | | | | | | | | | ● | ● | | | |
| 2 | ● | | | | | | | | | | | | | | ● | ● | | | |
| 3 | ● | | | | | | | | | ● | | | | | ● | ● | | | |
| 4 | ● | | | | | | | | | ● | | | | | ● | ● | | | |
| 5 | ● | | | | | | | | ● | ● | | | | | ● | ● | | | |
| 6 | ● | | | | | | | | ● | ● | | | | | ● | ● | | | |
| 7 | ● | | ● | | | | | | | | | | | | ● | ● | | | |
| 8 | ● | | ● | | ● | | | | | | | | | | ● | ● | | | |
| 9 | ● | | ● | | ● | | | | | | | | | | ● | ● | | | |
| 10 | ● | | ● | | ● | | | | | | | | | | ● | ● | | | |
| 11 | ● | | ● | | ● | | | | | ● | | | | | ● | ● | | | |
| 12 | ● | | ● | | ● | | | | | ● | | | | | ● | ● | | | |
| 13 | ● | | ● | | ● | | | | | ● | | | | ● | ● | ● | | | |
| 14 | ● | | ● | | ● | | | | ● | ● | | | | ● | ● | ● | | | |
| 15 | ● | | ● | | ● | | | | ● | ● | | | | ● | ● | ● | | | |
| 16 | ● | | ● | | ● | | | | ● | ● | | | ● | ● | ● | ● | | | |
| 17 | ● | | ● | | ● | | | | ● | ● | | | ● | ● | ● | ● | | | |
| 18 | ● | | ● | | ● | | | ● | ● | ● | | | ● | ● | ● | ● | | | |
| 19 | ● | | ● | | ● | | | ● | ● | ● | | | ● | ● | ● | ● | | | |
| 20 | ● | | ● | | ● | | | ● | ● | ● | | ● | ● | ● | ● | ● | | | |
| 21 | ● | | ● | | ● | | | ● | ● | ● | | ● | ● | ● | ● | ● | | | |
| ХП | ● | | ● | | ● | | ● | ● | ● | ● | ● | ● | ● | ● | ● | ● | | | |

| № Поз | Линейные (ЛК) 1 | 2 | 3 | 4 | 5 | 6 | Реостатные (РК) 217 | 7 | 8 | 9 | 218 | 10 | 11 | 12 | 22 | 17 | 20 | УК 23 | 24 |
|---|---|---|---|---|---|---|---|---|---|---|---|---|---|---|---|---|---|---|---|
| 1 | | | | | ● | | ● | ● | ● | ● | ● | ● | ● | ● | | ● | ● | | |
| 2 | | | | | ● | | ● | ● | ● | ● | ● | ● | ● | ● | | ● | ● | | |
| 3 | | | | | ● | | ● | ● | ● | ● | ● | ● | ● | ● | | ● | ● | | |
| 4 | | | | | ● | | ● | ● | ● | ● | ● | ● | ● | ● | | ● | ● | | |
| 5 | | | | | ● | | ● | ● | ● | ● | ● | ● | ● | ● | | ● | ● | | |
| 6 | | | | | ● | | ● | ● | ● | ● | ● | ● | ● | ● | | ● | ● | | |
| 7 | | | | | ● | | ● | ● | ● | ● | ● | ● | ● | ● | | ● | ● | | |
| 8 | | | | | ● | | ● | ● | ● | ● | ● | ● | ● | ● | | ● | ● | | |
| 9 | | | | | ● | | ● | ● | ● | ● | ● | ● | ● | ● | | ● | ● | | |
| 10 | | | | | ● | | ● | ● | ● | ● | ● | ● | ● | ● | | ● | ● | | |
| 11 | | | | | ● | | ● | ● | ● | ● | ● | ● | ● | ● | | ● | ● | | |
| 12 | | | | | ● | | ● | ● | ● | ● | ● | ● | ● | ● | | ● | ● | | |
| 13 | | | | | ● | | ● | ● | ● | ● | ● | ● | ● | ● | | ● | ● | | |
| 14 | | | | | ● | | ● | ● | ● | ● | ● | ● | ● | ● | | ● | ● | | |
| 15 | | | | | ● | | ● | ● | ● | ● | ● | ● | ● | ● | | ● | ● | | |
| 16 | | | | | ● | | ● | ● | ● | ● | ● | ● | ● | ● | | ● | ● | | |
| 17 | | | | | ● | | ● | ● | ● | ● | ● | ● | ● | ● | | ● | ● | | |
| 18 | | | | | ● | | ● | ● | ● | ● | ● | ● | ● | ● | | ● | ● | | |
| 19 | | | | | ● | | ● | ● | ● | ● | ● | ● | ● | ● | | ● | ● | | |
| 20 | | | | | ● | | ● | ● | ● | ● | ● | ● | ● | ● | | ● | ● | | |
| 21 | | | | | ● | | ● | ● | ● | ● | ● | ● | ● | ● | | ● | ● | | |
| ХП | | | | | ● | | ● | ● | ● | ● | ● | ● | ● | ● | | ● | ● | | |

| № Поз | Линейные (ЛК) 1 | 2 | 3 | 4 | 5 | 6 | Реостатные (РК) 217 | 7 | 8 | 9 | 218 | 10 | 11 | 12 | 22 | 17 | 20 | УК 23 | 24 |
|---|---|---|---|---|---|---|---|---|---|---|---|---|---|---|---|---|---|---|---|
| 1 | | | | ● | | | | | | | | | | | ● | | ● | | |
| 2 | | | | ● | | | | | | ● | | | | | ● | | ● | | |
| 3 | | | | ● | | | | | | ● | | | | | ● | | ● | | |
| 4 | | | | ● | | | | | ● | ● | | | | | ● | | ● | | |
| 5 | | | | ● | | | | | ● | ● | | | | | ● | | ● | | |
| 6 | | | | ● | | | | | ● | ● | | | | ● | ● | | ● | | |
| 7 | | | | ● | | | | | ● | ● | | | | ● | ● | | ● | | |
| 8 | | | | ● | | | | | ● | ● | | | | ● | ● | | ● | | |
| 9 | | | | ● | | | | | ● | ● | | | | ● | ● | | ● | ● | |
| 10 | | | | ● | ● | | | | | ● | | | | ● | ● | | ● | ● | |
| 11 | | | | ● | ● | | | | | ● | | | | ● | ● | | ● | ● | |
| 12 | | | | ● | ● | | | | ● | ● | | | | ● | ● | | ● | ● | |
| 13 | | | | ● | ● | | | | ● | ● | | | | ● | ● | | ● | ● | |
| 14 | | | | ● | ● | | | | ● | ● | | | | ● | ● | | ● | ● | |
| 15 | | | | ● | ● | | | | ● | ● | | | ● | ● | ● | | ● | ● | |
| 16 | | | | ● | ● | | | | ● | ● | | | ● | ● | ● | | ● | ● | |
| 17 | | | | ● | ● | | | ● | ● | ● | | | ● | ● | ● | | ● | ● | |
| 18 | | | | ● | ● | | | ● | ● | ● | | | ● | ● | ● | | ● | ● | |
| 19 | | | | ● | ● | | | ● | ● | ● | | ● | ● | ● | ● | | ● | ● | |
| 20 | | | | ● | ● | | | ● | ● | ● | | ● | ● | ● | ● | | ● | ● | |
| 21 | | | | ● | ● | | ● | ● | ● | ● | ● | ● | ● | ● | ● | | ● | ● | |
| ХП | | | | ● | ● | | ● | ● | ● | ● | ● | ● | ● | ● | ● | | ● | ● | |

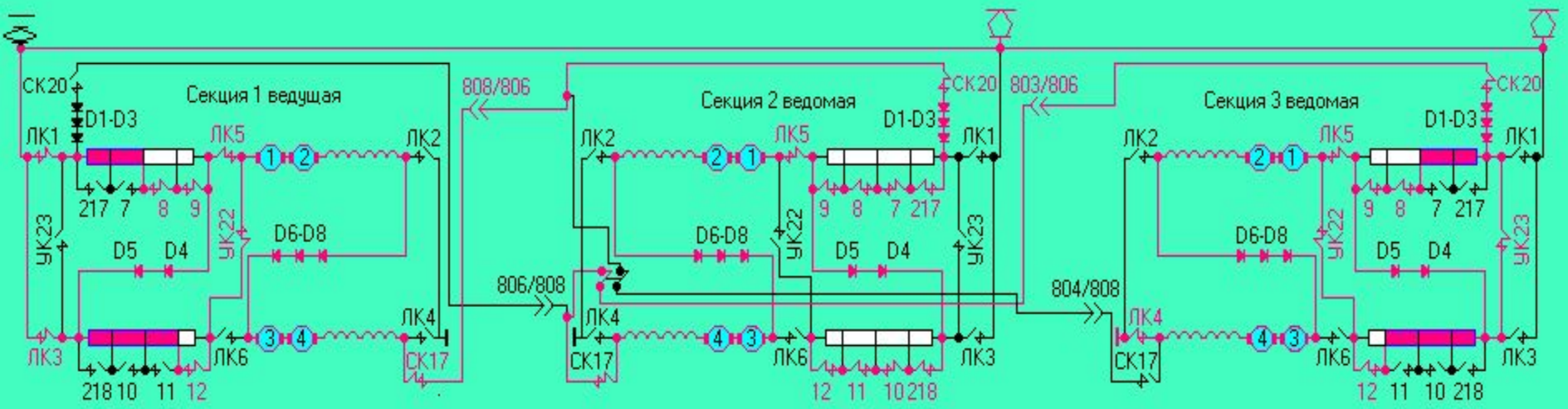


| № Поз | Линейные (ЛК) 1 | 2 | 3 | 4 | 5 | 6 | Реостатные (РК) 217 | 7 | 8 | 9 | 218 | 10 | 11 | 12 | 22 | 17 | 20 | УК 23 | 24 |
|---|---|---|---|---|---|---|---|---|---|---|---|---|---|---|---|---|---|---|---|
| 1 | ● | | | | | | | | | | | | | | ● | ● | | | |
| 2 | ● | | | | | | | | | | | | | | ● | ● | | | |
| 3 | ● | | | | | | | | | ● | | | | | ● | ● | | | |
| 4 | ● | | | | | | | | | ● | | | | | ● | ● | | | |
| 5 | ● | | | | | | | | ● | ● | | | | | ● | ● | | | |
| 6 | ● | | | | | | | | ● | ● | | | | | ● | ● | | | |
| 7 | ● | | ● | | | | | | | | | | | | ● | ● | | | |
| 8 | ● | | ● | | ● | | | | | | | | | | ● | ● | | | |
| 9 | ● | | ● | | ● | | | | | | | | | | ● | ● | | | |
| 10 | ● | | ● | | ● | | | | | | | | | | ● | ● | | | |
| 11 | ● | | ● | | ● | | | | | ● | | | | | ● | ● | | | |
| 12 | ● | | ● | | ● | | | | | ● | | | | | ● | ● | | | |
| 13 | ● | | ● | | ● | | | | | ● | | | | ● | ● | ● | | | |
| 14 | ● | | ● | | ● | | | | ● | ● | | | | ● | ● | ● | | | |
| 15 | ● | | ● | | ● | | | | ● | ● | | | | ● | ● | ● | | | |
| 16 | ● | | ● | | ● | | | | ● | ● | | | ● | ● | ● | ● | | | |
| 17 | ● | | ● | | ● | | | | ● | ● | | | ● | ● | ● | ● | | | |
| 18 | ● | | ● | | ● | | | ● | ● | ● | | | ● | ● | ● | ● | | | |
| 19 | ● | | ● | | ● | | | ● | ● | ● | | | ● | ● | ● | ● | | | |
| 20 | ● | | ● | | ● | | | ● | ● | ● | | ● | ● | ● | ● | ● | | | |
| 21 | ● | | ● | | ● | | | ● | ● | ● | | ● | ● | ● | ● | ● | | | |
| ХП | ● | | ● | | ● | | ● | ● | ● | ● | ● | ● | ● | ● | ● | ● | | | |

| № Поз | Линейные (ЛК) 1 | 2 | 3 | 4 | 5 | 6 | Реостатные (РК) 217 | 7 | 8 | 9 | 218 | 10 | 11 | 12 | 22 | 17 | 20 | УК 23 | 24 |
|---|---|---|---|---|---|---|---|---|---|---|---|---|---|---|---|---|---|---|---|
| 1 | | | | | ● | | ● | ● | ● | ● | ● | ● | ● | ● | | ● | ● | | |
| 2 | | | | | ● | | ● | ● | ● | ● | ● | ● | ● | ● | | ● | ● | | |
| 3 | | | | | ● | | ● | ● | ● | ● | ● | ● | ● | ● | | ● | ● | | |
| 4 | | | | | ● | | ● | ● | ● | ● | ● | ● | ● | ● | | ● | ● | | |
| 5 | | | | | ● | | ● | ● | ● | ● | ● | ● | ● | ● | | ● | ● | | |
| 6 | | | | | ● | | ● | ● | ● | ● | ● | ● | ● | ● | | ● | ● | | |
| 7 | | | | | ● | | ● | ● | ● | ● | ● | ● | ● | ● | | ● | ● | | |
| 8 | | | | | ● | | ● | ● | ● | ● | ● | ● | ● | ● | | ● | ● | | |
| 9 | | | | | ● | | ● | ● | ● | ● | ● | ● | ● | ● | | ● | ● | | |
| 10 | | | | | ● | | ● | ● | ● | ● | ● | ● | ● | ● | | ● | ● | | |
| 11 | | | | | ● | | ● | ● | ● | ● | ● | ● | ● | ● | | ● | ● | | |
| 12 | | | | | ● | | ● | ● | ● | ● | ● | ● | ● | ● | | ● | ● | | |
| 13 | | | | | ● | | ● | ● | ● | ● | ● | ● | ● | ● | | ● | ● | | |
| 14 | | | | | ● | | ● | ● | ● | ● | ● | ● | ● | ● | | ● | ● | | |
| 15 | | | | | ● | | ● | ● | ● | ● | ● | ● | ● | ● | | ● | ● | | |
| 16 | | | | | ● | | ● | ● | ● | ● | ● | ● | ● | ● | | ● | ● | | |
| 17 | | | | | ● | | ● | ● | ● | ● | ● | ● | ● | ● | | ● | ● | | |
| 18 | | | | | ● | | ● | ● | ● | ● | ● | ● | ● | ● | | ● | ● | | |
| 19 | | | | | ● | | ● | ● | ● | ● | ● | ● | ● | ● | | ● | ● | | |
| 20 | | | | | ● | | ● | ● | ● | ● | ● | ● | ● | ● | | ● | ● | | |
| 21 | | | | | ● | | ● | ● | ● | ● | ● | ● | ● | ● | | ● | ● | | |
| ХП | | | | | ● | | ● | ● | ● | ● | ● | ● | ● | ● | | ● | ● | | |

| № Поз | Линейные (ЛК) 1 | 2 | 3 | 4 | 5 | 6 | Реостатные (РК) 217 | 7 | 8 | 9 | 218 | 10 | 11 | 12 | 22 | 17 | 20 | УК 23 | 24 |
|---|---|---|---|---|---|---|---|---|---|---|---|---|---|---|---|---|---|---|---|
| 1 | | | | ● | | | | | | | | | | | ● | | ● | | |
| 2 | | | | ● | | | | | | ● | | | | | ● | | ● | | |
| 3 | | | | ● | | | | | | ● | | | | | ● | | ● | | |
| 4 | | | | ● | | | | | ● | ● | | | | | ● | | ● | | |
| 5 | | | | ● | | | | | ● | ● | | | | | ● | | ● | | |
| 6 | | | | ● | | | | | ● | ● | | | | ● | ● | | ● | | |
| 7 | | | | ● | | | | | ● | ● | | | | ● | ● | | ● | | |
| 8 | | | | ● | | | | | ● | ● | | | | ● | ● | | ● | | |
| 9 | | | | ● | | | | | ● | ● | | | | ● | ● | | ● | ● | |
| 10 | | | | ● | ● | | | | | ● | | | | ● | ● | | ● | ● | |
| 11 | | | | ● | ● | | | | | ● | | | | ● | ● | | ● | ● | |
| 12 | | | | ● | ● | | | | ● | ● | | | | ● | ● | | ● | ● | |
| 13 | | | | ● | ● | | | | ● | ● | | | | ● | ● | | ● | ● | |
| 14 | | | | ● | ● | | | | ● | ● | | | | ● | ● | | ● | ● | |
| 15 | | | | ● | ● | | | | ● | ● | | | ● | ● | ● | | ● | ● | |
| 16 | | | | ● | ● | | | | ● | ● | | | ● | ● | ● | | ● | ● | |
| 17 | | | | ● | ● | | | ● | ● | ● | | | ● | ● | ● | | ● | ● | |
| 18 | | | | ● | ● | | | ● | ● | ● | | | ● | ● | ● | | ● | ● | |
| 19 | | | | ● | ● | | | ● | ● | ● | | ● | ● | ● | ● | | ● | ● | |
| 20 | | | | ● | ● | | | ● | ● | ● | | ● | ● | ● | ● | | ● | ● | |
| 21 | | | | ● | ● | | ● | ● | ● | ● | ● | ● | ● | ● | ● | | ● | ● | |
| ХП | | | | ● | ● | | ● | ● | ● | ● | ● | ● | ● | ● | ● | | ● | ● | |

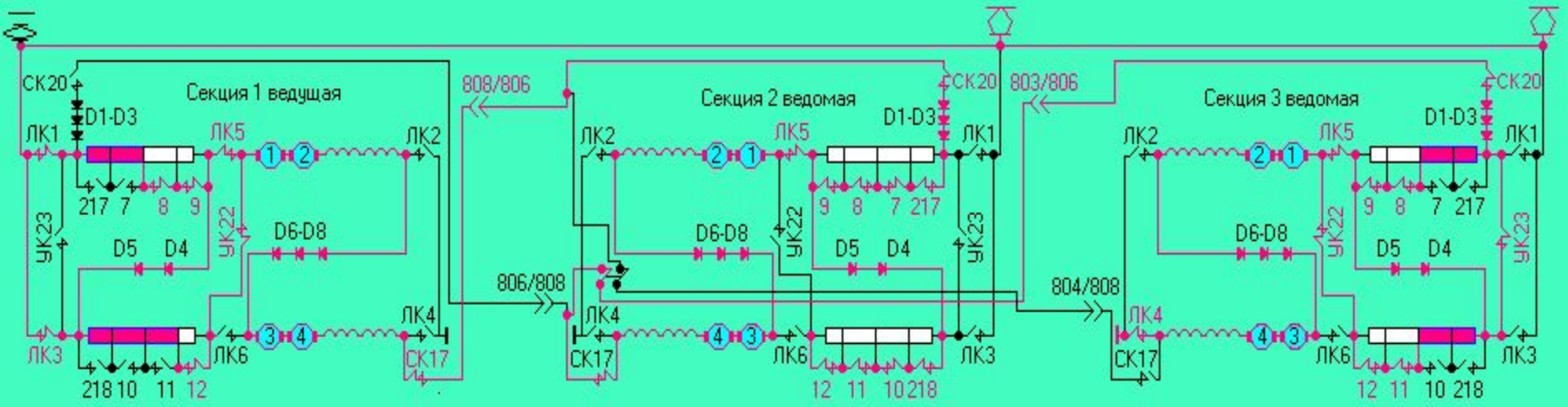


| № Поз | Линейные (ЛК) 1 | 2 | 3 | 4 | 5 | 6 | Реостатные (РК) 217 | 7 | 8 | 9 | 218 | 10 | 11 | 12 | 22 | 17 | 20 | УК 23 | 24 | Линейные (ЛК) 1 | 2 | 3 | 4 | 5 | 6 | Реостатные (РК) 217 | 7 | 8 | 9 | 218 | 10 | 11 | 12 | 22 | 17 | 20 | УК 23 | 24 | Линейные (ЛК) 1 | 2 | 3 | 4 | 5 | 6 | Реостатные (РК) 217 | 7 | 8 | 9 | 218 | 10 | 11 | 12 | 22 | 17 | 20 | УК 23 | 24 |
|---|---|---|---|---|---|---|---|---|---|---|---|---|---|---|---|---|---|---|---|---|---|---|---|---|---|---|---|---|---|---|---|---|---|---|---|---|---|---|---|---|---|---|---|---|---|---|---|---|---|---|---|---|---|---|---|---|---|---|---|
| 1 | ● | | | | | | | | | | | | | | ● | ● | | | | | | | | ● | | ● | ● | ● | ● | ● | ● | ● | ● | | ● | ● | | | | | | | ● | | | | | | | | ● | | ● | | | |
| 2 | ● | | | | | | | | | | | | | | ● | ● | | | | | | | | ● | | ● | ● | ● | ● | ● | ● | ● | ● | | ● | ● | | | | | | | ● | | | | ● | | | | ● | | ● | | | |
| 3 | ● | | | | | | | | | ● | | | | | ● | ● | | | | | | | | ● | | ● | ● | ● | ● | ● | ● | ● | ● | | ● | ● | | | | | | | ● | | | | ● | | | | ● | | ● | | | |
| 4 | ● | | | | | | | | | ● | | | | | ● | ● | | | | | | | | ● | | ● | ● | ● | ● | ● | ● | ● | ● | | ● | ● | | | | | | | ● | | | | ● | | | | ● | | ● | | | |
| 5 | ● | | | | | | | | ● | ● | | | | | ● | ● | | | | | | | | ● | | ● | ● | ● | ● | ● | ● | ● | ● | | ● | ● | | | | | | | ● | | | | ● | | | | ● | | ● | | | |
| 6 | ● | | | | | | | | ● | ● | | | | | ● | ● | | | | | | | | ● | | ● | ● | ● | ● | ● | ● | ● | ● | | ● | ● | | | | | | | ● | | | | ● | | | | ● | | ● | | | |
| 7 | ● | | ● | | | | | | | | | | | | ● | ● | | | | | | | | ● | | ● | ● | ● | ● | ● | ● | ● | ● | | ● | ● | | | | | | | ● | | | | ● | | | | ● | | ● | | | |
| 8 | ● | | ● | | ● | | | | | | | | | | ● | ● | | | | | | | | ● | | ● | ● | ● | ● | ● | ● | ● | ● | | ● | ● | | | | | | | ● | | | | ● | | | | ● | | ● | | | |
| 9 | ● | | ● | | ● | | | | | | | | | | ● | ● | | | | | | | | ● | | ● | ● | ● | ● | ● | ● | ● | ● | | ● | ● | | | | | | | ● | | | | ● | | | | ● | | ● | | ● | ● |
| 10 | ● | | ● | | ● | | | | | | | | | | ● | ● | | | | | | | | ● | | ● | ● | ● | ● | ● | ● | ● | ● | | ● | ● | | | | | | | ● | ● | | | ● | | | | ● | | ● | | ● | ● |
| 11 | ● | | ● | | ● | | | | | ● | | | | | ● | ● | | | | | | | | ● | | ● | ● | ● | ● | ● | ● | ● | ● | | ● | ● | | | | | | | ● | ● | | | ● | | | | ● | | ● | | ● | ● |
| 12 | ● | | ● | | ● | | | | | ● | | | | | ● | ● | | | | | | | | ● | | ● | ● | ● | ● | ● | ● | ● | ● | | ● | ● | | | | | | | ● | ● | | | ● | ● | | | ● | | ● | | ● | ● |
| 13 | ● | | ● | | ● | | | | | ● | | | | ● | ● | ● | | | | | | | | ● | | ● | ● | ● | ● | ● | ● | ● | ● | | ● | ● | | | | | | | ● | ● | | | ● | ● | | | ● | | ● | | ● | ● |
| 14 | ● | | ● | | ● | | | | ● | ● | | | | ● | ● | ● | | | | | | | | ● | | ● | ● | ● | ● | ● | ● | ● | ● | | ● | ● | | | | | | | ● | ● | | | ● | ● | | | ● | | ● | | ● | ● |
| 15 | ● | | ● | | ● | | | | ● | ● | | | | ● | ● | ● | | | | | | | | ● | | ● | ● | ● | ● | ● | ● | ● | ● | | ● | ● | | | | | | | ● | ● | | | ● | ● | | | ● | ● | ● | | ● | ● |
| 16 | ● | | ● | | ● | | | | ● | ● | | | ● | ● | ● | ● | | | | | | | | ● | | ● | ● | ● | ● | ● | ● | ● | ● | | ● | ● | | | | | | | ● | ● | | | ● | ● | | | ● | ● | ● | | ● | ● |
| 17 | ● | | ● | | ● | | | | ● | ● | | | ● | ● | ● | ● | | | | | | | | ● | | ● | ● | ● | ● | ● | ● | ● | ● | | ● | ● | | | | | | | ● | ● | | ● | ● | ● | | | ● | ● | ● | | ● | ● |
| 18 | ● | | ● | | ● | | | ● | ● | ● | | | ● | ● | ● | ● | | | | | | | | ● | | ● | ● | ● | ● | ● | ● | ● | ● | | ● | ● | | | | | | | ● | ● | | ● | ● | ● | | | ● | ● | ● | | ● | ● |
| 19 | ● | | ● | | ● | | | ● | ● | ● | | | ● | ● | ● | ● | | | | | | | | ● | | ● | ● | ● | ● | ● | ● | ● | ● | | ● | ● | | | | | | | ● | ● | | ● | ● | ● | | ● | ● | ● | ● | ● | ● |
| 20 | ● | | ● | | ● | | | ● | ● | ● | | ● | ● | ● | ● | ● | | | | | | | | ● | | ● | ● | ● | ● | ● | ● | ● | ● | | ● | ● | | | | | | | ● | ● | | ● | ● | ● | | ● | ● | ● | ● | ● | ● |
| 21 | ● | | ● | | ● | | | ● | ● | ● | | ● | ● | ● | ● | ● | | | | | | | | ● | | ● | ● | ● | ● | ● | ● | ● | ● | | ● | ● | | | | | | | ● | ● | ● | ● | ● | ● | ● | ● | ● | ● | ● | | ● | ● |
| ХП | ● | | ● | | ● | | ● | ● | ● | ● | ● | ● | ● | ● | ● | ● | | | | | | | | ● | | ● | ● | ● | ● | ● | ● | ● | ● | | ● | ● | | | | | | | ● | ● | | | ● | ● | | | ● | ● | ● | | ● | ● |

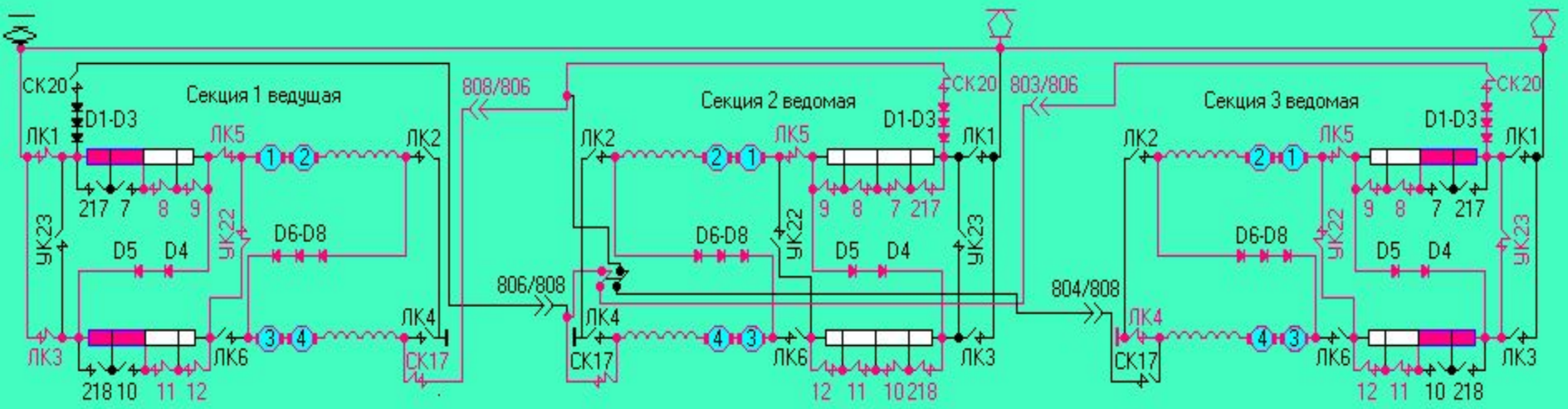


| № Поз | Линейные (ЛК) 1 | 2 | 3 | 4 | 5 | 6 | Реостатные (РК) 217 | 7 | 8 | 9 | 218 | 10 | 11 | 12 | 22 | 17 | 20 | УК 23 | 24 |
|---|---|---|---|---|---|---|---|---|---|---|---|---|---|---|---|---|---|---|---|
| 1 | ● | | | | | | | | | | | | | | ● | ● | | | |
| 2 | ● | | | | | | | | | | | | | | ● | ● | | | |
| 3 | ● | | | | | | | | | ● | | | | | ● | ● | | | |
| 4 | ● | | | | | | | | | ● | | | | | ● | ● | | | |
| 5 | ● | | | | | | | | ● | ● | | | | | ● | ● | | | |
| 6 | ● | | | | | | | | ● | ● | | | | | ● | ● | | | |
| 7 | ● | | ● | | | | | | | | | | | | ● | ● | | | |
| 8 | ● | | ● | | ● | | | | | | | | | | ● | ● | | | |
| 9 | ● | | ● | | ● | | | | | | | | | | ● | ● | | | |
| 10 | ● | | ● | | ● | | | | | | | | | | ● | ● | | | |
| 11 | ● | | ● | | ● | | | | | ● | | | | | ● | ● | | | |
| 12 | ● | | ● | | ● | | | | | ● | | | | | ● | ● | | | |
| 13 | ● | | ● | | ● | | | | | ● | | | | ● | ● | ● | | | |
| 14 | ● | | ● | | ● | | | | ● | ● | | | | ● | ● | ● | | | |
| 15 | ● | | ● | | ● | | | | ● | ● | | | | ● | ● | ● | | | |
| 16 | ● | | ● | | ● | | | | ● | ● | | | ● | ● | ● | ● | | | |
| 17 | ● | | ● | | ● | | | | ● | ● | | | ● | ● | ● | ● | | | |
| 18 | ● | | ● | | ● | | | ● | ● | ● | | | ● | ● | ● | ● | | | |
| 19 | ● | | ● | | ● | | | ● | ● | ● | | | ● | ● | ● | ● | | | |
| 20 | ● | | ● | | ● | | | ● | ● | ● | | ● | ● | ● | ● | ● | | | |
| 21 | ● | | ● | | ● | | | ● | ● | ● | | ● | ● | ● | ● | ● | | | |
| ХП | ● | | ● | | ● | | ● | ● | ● | ● | ● | ● | ● | ● | ● | ● | | | |

| № Поз | Линейные (ЛК) 1 | 2 | 3 | 4 | 5 | 6 | Реостатные (РК) 217 | 7 | 8 | 9 | 218 | 10 | 11 | 12 | 22 | 17 | 20 | УК 23 | 24 |
|---|---|---|---|---|---|---|---|---|---|---|---|---|---|---|---|---|---|---|---|
| 1 | | | | | ● | | ● | ● | ● | ● | ● | ● | ● | ● | | ● | ● | | |
| 2 | | | | | ● | | ● | ● | ● | ● | ● | ● | ● | ● | | ● | ● | | |
| 3 | | | | | ● | | ● | ● | ● | ● | ● | ● | ● | ● | | ● | ● | | |
| 4 | | | | | ● | | ● | ● | ● | ● | ● | ● | ● | ● | | ● | ● | | |
| 5 | | | | | ● | | ● | ● | ● | ● | ● | ● | ● | ● | | ● | ● | | |
| 6 | | | | | ● | | ● | ● | ● | ● | ● | ● | ● | ● | | ● | ● | | |
| 7 | | | | | ● | | ● | ● | ● | ● | ● | ● | ● | ● | | ● | ● | | |
| 8 | | | | | ● | | ● | ● | ● | ● | ● | ● | ● | ● | | ● | ● | | |
| 9 | | | | | ● | | ● | ● | ● | ● | ● | ● | ● | ● | | ● | ● | | |
| 10 | | | | | ● | | ● | ● | ● | ● | ● | ● | ● | ● | | ● | ● | | |
| 11 | | | | | ● | | ● | ● | ● | ● | ● | ● | ● | ● | | ● | ● | | |
| 12 | | | | | ● | | ● | ● | ● | ● | ● | ● | ● | ● | | ● | ● | | |
| 13 | | | | | ● | | ● | ● | ● | ● | ● | ● | ● | ● | | ● | ● | | |
| 14 | | | | | ● | | ● | ● | ● | ● | ● | ● | ● | ● | | ● | ● | | |
| 15 | | | | | ● | | ● | ● | ● | ● | ● | ● | ● | ● | | ● | ● | | |
| 16 | | | | | ● | | ● | ● | ● | ● | ● | ● | ● | ● | | ● | ● | | |
| 17 | | | | | ● | | ● | ● | ● | ● | ● | ● | ● | ● | | ● | ● | | |
| 18 | | | | | ● | | ● | ● | ● | ● | ● | ● | ● | ● | | ● | ● | | |
| 19 | | | | | ● | | ● | ● | ● | ● | ● | ● | ● | ● | | ● | ● | | |
| 20 | | | | | ● | | ● | ● | ● | ● | ● | ● | ● | ● | | ● | ● | | |
| 21 | | | | | ● | | ● | ● | ● | ● | ● | ● | ● | ● | | ● | ● | | |
| ХП | | | | | ● | | ● | ● | ● | ● | ● | ● | ● | ● | | ● | ● | | |

| № Поз | Линейные (ЛК) 1 | 2 | 3 | 4 | 5 | 6 | Реостатные (РК) 217 | 7 | 8 | 9 | 218 | 10 | 11 | 12 | 22 | 17 | 20 | УК 23 | 24 |
|---|---|---|---|---|---|---|---|---|---|---|---|---|---|---|---|---|---|---|---|
| 1 | | | | ● | | | | | | | | | | | ● | | ● | | |
| 2 | | | | ● | | | | | | ● | | | | | ● | | ● | | |
| 3 | | | | ● | | | | | | ● | | | | | ● | | ● | | |
| 4 | | | | ● | | | | | ● | ● | | | | | ● | | ● | | |
| 5 | | | | ● | | | | | ● | ● | | | | | ● | | ● | | |
| 6 | | | | ● | | | | | ● | ● | | | | ● | ● | | ● | | |
| 7 | | | | ● | | | | | ● | ● | | | | ● | ● | | ● | | |
| 8 | | | | ● | | | | | ● | ● | | | | ● | ● | | ● | | |
| 9 | | | | ● | | | | | ● | ● | | | | ● | ● | | ● | ● | |
| 10 | | | | ● | ● | | | | | ● | | | | ● | ● | | ● | ● | |
| 11 | | | | ● | ● | | | | | ● | | | | ● | ● | | ● | ● | |
| 12 | | | | ● | ● | | | | ● | ● | | | | ● | ● | | ● | ● | |
| 13 | | | | ● | ● | | | | ● | ● | | | | ● | ● | | ● | ● | |
| 14 | | | | ● | ● | | | | ● | ● | | | | ● | ● | | ● | ● | |
| 15 | | | | ● | ● | | | | ● | ● | | | ● | ● | ● | | ● | ● | |
| 16 | | | | ● | ● | | | | ● | ● | | | ● | ● | ● | | ● | ● | |
| 17 | | | | ● | ● | | | ● | ● | ● | | | ● | ● | ● | | ● | ● | |
| 18 | | | | ● | ● | | | ● | ● | ● | | | ● | ● | ● | | ● | ● | |
| 19 | | | | ● | ● | | | ● | ● | ● | | ● | ● | ● | ● | | ● | ● | |
| 20 | | | | ● | ● | | | ● | ● | ● | | ● | ● | ● | ● | | ● | ● | |
| 21 | | | | ● | ● | | ● | ● | ● | ● | ● | ● | ● | ● | ● | | ● | ● | |
| ХП | | | | ● | ● | | ● | ● | ● | ● | ● | ● | ● | ● | ● | | ● | ● | |

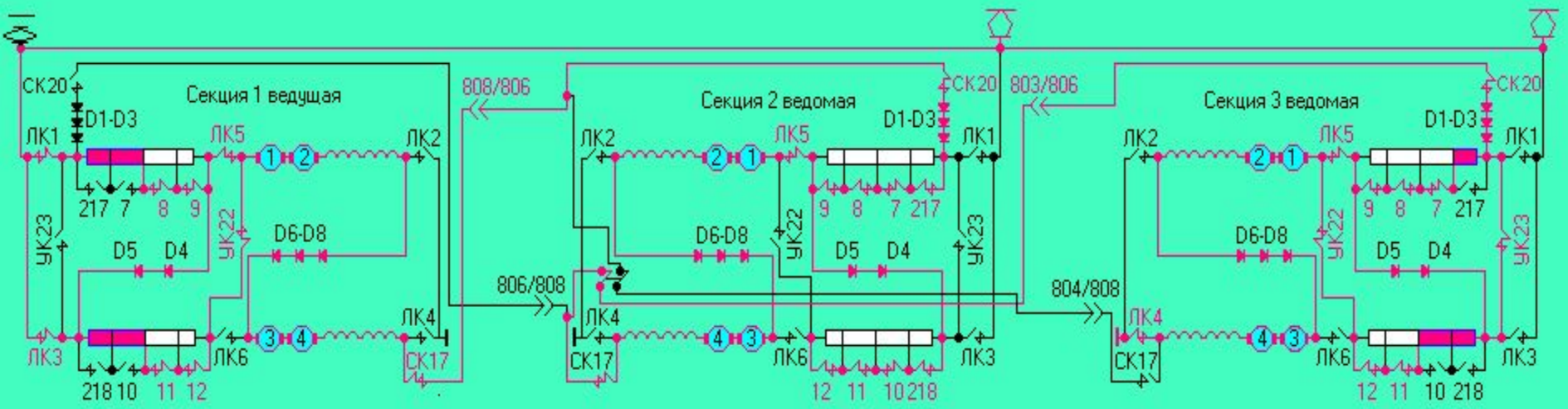


| № Поз | Линейные (ЛК) 1 | 2 | 3 | 4 | 5 | 6 | Реостатные (РК) 217 | 7 | 8 | 9 | 218 | 10 | 11 | 12 | 22 | 17 | 20 | УК 23 | 24 |
|---|---|---|---|---|---|---|---|---|---|---|---|---|---|---|---|---|---|---|---|
| 1 | ● | | | | | | | | | | | | | | ● | ● | | | |
| 2 | ● | | | | | | | | | | | | | | ● | ● | | | |
| 3 | ● | | | | | | | | | ● | | | | | ● | ● | | | |
| 4 | ● | | | | | | | | | ● | | | | | ● | ● | | | |
| 5 | ● | | | | | | | | ● | ● | | | | | ● | ● | | | |
| 6 | ● | | | | | | | | ● | ● | | | | | ● | ● | | | |
| 7 | ● | | ● | | | | | | | | | | | | ● | ● | | | |
| 8 | ● | | ● | | ● | | | | | | | | | | ● | ● | | | |
| 9 | ● | | ● | | ● | | | | | | | | | | ● | ● | | | |
| 10 | ● | | ● | | ● | | | | | | | | | | ● | ● | | | |
| 11 | ● | | ● | | ● | | | | | ● | | | | | ● | ● | | | |
| 12 | ● | | ● | | ● | | | | | ● | | | | | ● | ● | | | |
| 13 | ● | | ● | | ● | | | | | ● | | | | ● | ● | ● | | | |
| 14 | ● | | ● | | ● | | | | ● | ● | | | | ● | ● | ● | | | |
| 15 | ● | | ● | | ● | | | | ● | ● | | | | ● | ● | ● | | | |
| 16 | ● | | ● | | ● | | | | ● | ● | | | ● | ● | ● | ● | | | |
| 17 | ● | | ● | | ● | | | | ● | ● | | | ● | ● | ● | ● | | | |
| 18 | ● | | ● | | ● | | | ● | ● | ● | | | ● | ● | ● | ● | | | |
| 19 | ● | | ● | | ● | | | ● | ● | ● | | | ● | ● | ● | ● | | | |
| 20 | ● | | ● | | ● | | | ● | ● | ● | | ● | ● | ● | ● | ● | | | |
| 21 | ● | | ● | | ● | | | ● | ● | ● | | ● | ● | ● | ● | ● | | | |
| ХП | ● | | ● | | ● | | ● | ● | ● | ● | ● | ● | ● | ● | ● | ● | | | |

| № Поз | Линейные (ЛК) 1 | 2 | 3 | 4 | 5 | 6 | Реостатные (РК) 217 | 7 | 8 | 9 | 218 | 10 | 11 | 12 | 22 | 17 | 20 | УК 23 | 24 |
|---|---|---|---|---|---|---|---|---|---|---|---|---|---|---|---|---|---|---|---|
| 1 | | | | | ● | | ● | ● | ● | ● | ● | ● | ● | ● | | ● | ● | | |
| 2 | | | | | ● | | ● | ● | ● | ● | ● | ● | ● | ● | | ● | ● | | |
| 3 | | | | | ● | | ● | ● | ● | ● | ● | ● | ● | ● | | ● | ● | | |
| 4 | | | | | ● | | ● | ● | ● | ● | ● | ● | ● | ● | | ● | ● | | |
| 5 | | | | | ● | | ● | ● | ● | ● | ● | ● | ● | ● | | ● | ● | | |
| 6 | | | | | ● | | ● | ● | ● | ● | ● | ● | ● | ● | | ● | ● | | |
| 7 | | | | | ● | | ● | ● | ● | ● | ● | ● | ● | ● | | ● | ● | | |
| 8 | | | | | ● | | ● | ● | ● | ● | ● | ● | ● | ● | | ● | ● | | |
| 9 | | | | | ● | | ● | ● | ● | ● | ● | ● | ● | ● | | ● | ● | | |
| 10 | | | | | ● | | ● | ● | ● | ● | ● | ● | ● | ● | | ● | ● | | |
| 11 | | | | | ● | | ● | ● | ● | ● | ● | ● | ● | ● | | ● | ● | | |
| 12 | | | | | ● | | ● | ● | ● | ● | ● | ● | ● | ● | | ● | ● | | |
| 13 | | | | | ● | | ● | ● | ● | ● | ● | ● | ● | ● | | ● | ● | | |
| 14 | | | | | ● | | ● | ● | ● | ● | ● | ● | ● | ● | | ● | ● | | |
| 15 | | | | | ● | | ● | ● | ● | ● | ● | ● | ● | ● | | ● | ● | | |
| 16 | | | | | ● | | ● | ● | ● | ● | ● | ● | ● | ● | | ● | ● | | |
| 17 | | | | | ● | | ● | ● | ● | ● | ● | ● | ● | ● | | ● | ● | | |
| 18 | | | | | ● | | ● | ● | ● | ● | ● | ● | ● | ● | | ● | ● | | |
| 19 | | | | | ● | | ● | ● | ● | ● | ● | ● | ● | ● | | ● | ● | | |
| 20 | | | | | ● | | ● | ● | ● | ● | ● | ● | ● | ● | | ● | ● | | |
| 21 | | | | | ● | | ● | ● | ● | ● | ● | ● | ● | ● | | ● | ● | | |
| ХП | | | | | ● | | ● | ● | ● | ● | ● | ● | ● | ● | | ● | ● | | |

| № Поз | Линейные (ЛК) 1 | 2 | 3 | 4 | 5 | 6 | Реостатные (РК) 217 | 7 | 8 | 9 | 218 | 10 | 11 | 12 | 22 | 17 | 20 | УК 23 | 24 |
|---|---|---|---|---|---|---|---|---|---|---|---|---|---|---|---|---|---|---|---|
| 1 | | | | ● | | | | | | | | | | | ● | | ● | | |
| 2 | | | | ● | | | | | | ● | | | | | ● | | ● | | |
| 3 | | | | ● | | | | | | ● | | | | | ● | | ● | | |
| 4 | | | | ● | | | | | ● | ● | | | | | ● | | ● | | |
| 5 | | | | ● | | | | | ● | ● | | | | | ● | | ● | | |
| 6 | | | | ● | | | | | ● | ● | | | | ● | ● | | ● | | |
| 7 | | | | ● | | | | | ● | ● | | | | ● | ● | | ● | | |
| 8 | | | | ● | | | | | ● | ● | | | | ● | ● | | ● | | |
| 9 | | | | ● | | | | | ● | ● | | | | ● | ● | | ● | ● | |
| 10 | | | | ● | ● | | | | | ● | | | | ● | ● | | ● | ● | |
| 11 | | | | ● | ● | | | | | ● | | | | ● | ● | | ● | ● | |
| 12 | | | | ● | ● | | | | ● | ● | | | | ● | ● | | ● | ● | |
| 13 | | | | ● | ● | | | | ● | ● | | | | ● | ● | | ● | ● | |
| 14 | | | | ● | ● | | | | ● | ● | | | | ● | ● | | ● | ● | |
| 15 | | | | ● | ● | | | | ● | ● | | | ● | ● | ● | | ● | ● | |
| 16 | | | | ● | ● | | | | ● | ● | | | ● | ● | ● | | ● | ● | |
| 17 | | | | ● | ● | | | ● | ● | ● | | | ● | ● | ● | | ● | ● | |
| 18 | | | | ● | ● | | | ● | ● | ● | | | ● | ● | ● | | ● | ● | |
| 19 | | | | ● | ● | | | ● | ● | ● | | ● | ● | ● | ● | | ● | ● | |
| 20 | | | | ● | ● | | | ● | ● | ● | | ● | ● | ● | ● | | ● | ● | |
| 21 | | | | ● | ● | | ● | ● | ● | ● | ● | ● | ● | ● | ● | | ● | ● | |
| ХП | | | | ● | ● | | ● | ● | ● | ● | ● | ● | ● | ● | ● | | ● | ● | |

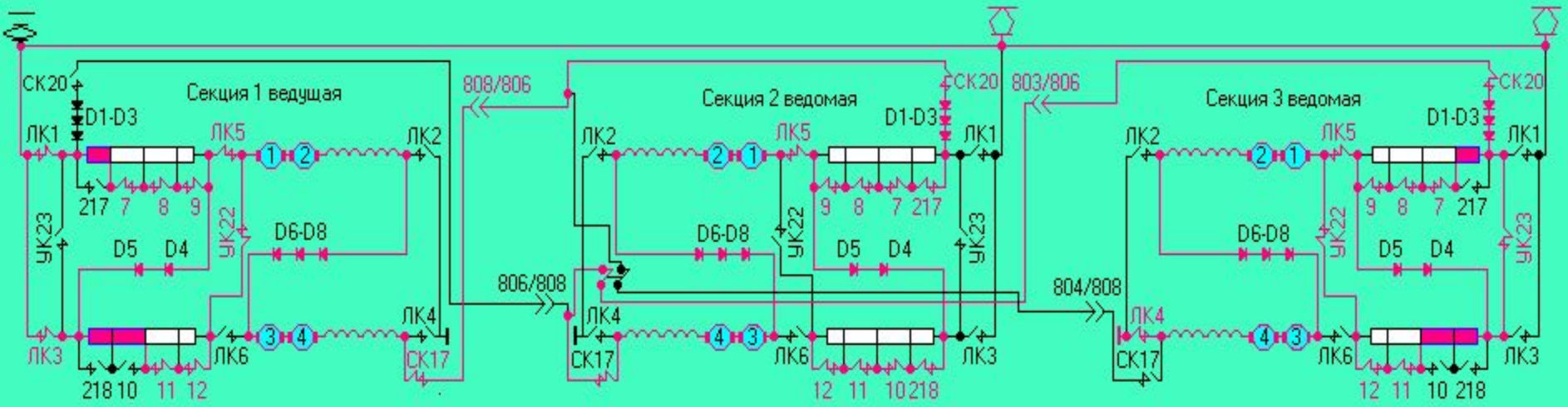


| № Поз | Линейные (ЛК) 1 | 2 | 3 | 4 | 5 | 6 | Реостатные (РК) 217 | 7 | 8 | 9 | 218 | 10 | 11 | 12 | 22 | 17 | 20 | УК 23 | 24 | Линейные (ЛК) 1 | 2 | 3 | 4 | 5 | 6 | Реостатные (РК) 217 | 7 | 8 | 9 | 218 | 10 | 11 | 12 | 22 | 17 | 20 | УК 23 | 24 | Линейные (ЛК) 1 | 2 | 3 | 4 | 5 | 6 | Реостатные (РК) 217 | 7 | 8 | 9 | 218 | 10 | 11 | 12 | 22 | 17 | 20 | УК 23 | 24 |
|---|---|---|---|---|---|---|---|---|---|---|---|---|---|---|---|---|---|---|---|---|---|---|---|---|---|---|---|---|---|---|---|---|---|---|---|---|---|---|---|---|---|---|---|---|---|---|---|---|---|---|---|---|---|---|---|---|---|---|---|
| 1 | ● | | | | | | | | | | | | | | ● | ● | | | | | | | | ● | | ● | ● | ● | ● | ● | ● | ● | ● | | ● | ● | | | | | | | ● | | | | | | | | | | ● | | | | |
| 2 | ● | | | | | | | | | | | | | | ● | ● | | | | | | | | ● | | ● | ● | ● | ● | ● | ● | ● | ● | | ● | ● | | | | | | | ● | | | | ● | | | | | | ● | | | | |
| 3 | ● | | | | | | | | | ● | | | | | ● | ● | | | | | | | | ● | | ● | ● | ● | ● | ● | ● | ● | ● | | ● | ● | | | | | | | ● | | | | ● | | | | | | ● | | | | |
| 4 | ● | | | | | | | | | ● | | | | | ● | ● | | | | | | | | ● | | ● | ● | ● | ● | ● | ● | ● | ● | | ● | ● | | | | | | | ● | | | | | | | ● | ● | | | ● | | | | |
| 5 | ● | | | | | | | | ● | ● | | | | | ● | ● | | | | | | | | ● | | ● | ● | ● | ● | ● | ● | ● | ● | | ● | ● | | | | | | | ● | | | | | | | ● | ● | | | ● | | | | |
| 6 | ● | | | | | | | | ● | ● | | | | | ● | ● | | | | | | | | ● | | ● | ● | ● | ● | ● | ● | ● | ● | | ● | ● | | | | | | | ● | | | | | | | ● | ● | | | ● | | | | |
| 7 | ● | | ● | | | | | | | | | | | | ● | ● | | | | | | | | ● | | ● | ● | ● | ● | ● | ● | ● | ● | | ● | ● | | | | | | | ● | | | | | | | ● | ● | | | ● | | | | |
| 8 | ● | | ● | | ● | | | | | | | | | | ● | ● | | | | | | | | ● | | ● | ● | ● | ● | ● | ● | ● | ● | | ● | ● | | | | | | | ● | | | | | | | ● | ● | | | ● | | | | |
| 9 | ● | | ● | | ● | | | | | | | | | | ● | ● | | | | | | | | ● | | ● | ● | ● | ● | ● | ● | ● | ● | | ● | ● | | | | | | | ● | | | | | | | ● | ● | | | ● | | | ● | |
| 10 | ● | | ● | | ● | | | | | | | | | | ● | ● | | | | | | | | ● | | ● | ● | ● | ● | ● | ● | ● | ● | | ● | ● | | | | | | | ● | ● | | | | ● | | ● | ● | | | ● | | ● | |
| 11 | ● | | ● | | ● | | | | | ● | | | | | ● | ● | | | | | | | | ● | | ● | ● | ● | ● | ● | ● | ● | ● | | ● | ● | | | | | | | ● | ● | | | | ● | | ● | ● | | | ● | | ● | |
| 12 | ● | | ● | | ● | | | | | ● | | | | | ● | ● | | | | | | | | ● | | ● | ● | ● | ● | ● | ● | ● | ● | | ● | ● | | | | | | | ● | ● | | | ● | ● | | ● | ● | | | ● | | ● | |
| 13 | ● | | ● | | ● | | | | | ● | | | | ● | ● | ● | | | | | | | | ● | | ● | ● | ● | ● | ● | ● | ● | ● | | ● | ● | | | | | | | ● | ● | | | ● | ● | | ● | ● | | | ● | | ● | |
| 14 | ● | | ● | | ● | | | | ● | ● | | | | ● | ● | ● | | | | | | | | ● | | ● | ● | ● | ● | ● | ● | ● | ● | | ● | ● | | | | | | | ● | ● | | | ● | ● | | ● | ● | | | ● | | ● | |
| 15 | ● | | ● | | ● | | | | ● | ● | | | | ● | ● | ● | | | | | | | | ● | | ● | ● | ● | ● | ● | ● | ● | ● | | ● | ● | | | | | | | ● | ● | | | ● | ● | | | ● | ● | ● | ● | ● | ● | |
| 16 | ● | | ● | | ● | | | | ● | ● | | | ● | ● | ● | ● | | | | | | | | ● | | ● | ● | ● | ● | ● | ● | ● | ● | | ● | ● | | | | | | | ● | ● | | | ● | ● | | | ● | ● | ● | ● | ● | ● | |
| 17 | ● | | ● | | ● | | | | ● | ● | | | ● | ● | ● | ● | | | | | | | | ● | | ● | ● | ● | ● | ● | ● | ● | ● | | ● | ● | | | | | | | ● | ● | | | ● | ● | | | ● | ● | ● | ● | ● | ● | |
| 18 | ● | | ● | | ● | | | ● | ● | ● | | | ● | ● | ● | ● | | | | | | | | ● | | ● | ● | ● | ● | ● | ● | ● | ● | | ● | ● | | | | | | | ● | ● | | | ● | ● | ● | | | ● | ● | ● | ● | ● | ● |
| 19 | ● | | ● | | ● | | | ● | ● | ● | | | ● | ● | ● | ● | | | | | | | | ● | | ● | ● | ● | ● | ● | ● | ● | ● | | ● | ● | | | | | | | ● | ● | | | ● | ● | ● | | ● | ● | ● | ● | ● | ● | |
| 20 | ● | | ● | | ● | | | ● | ● | ● | | ● | ● | ● | ● | ● | | | | | | | | ● | | ● | ● | ● | ● | ● | ● | ● | ● | | ● | ● | | | | | | | ● | ● | | | ● | ● | ● | | ● | ● | ● | ● | ● | ● | |
| 21 | ● | | ● | | ● | | | ● | ● | ● | | ● | ● | ● | ● | ● | | | | | | | | ● | | ● | ● | ● | ● | ● | ● | ● | ● | | ● | ● | | | | | | | ● | ● | | | ● | ● | ● | ● | ● | ● | ● | ● | ● | ● | |
| ХП | ● | | ● | | ● | | ● | ● | ● | ● | ● | ● | ● | ● | ● | ● | | | | | | | | ● | | ● | ● | ● | ● | ● | ● | ● | ● | | ● | ● | | | | | | | ● | ● | | | ● | ● | ● | ● | ● | ● | ● | ● | ● | ● | |

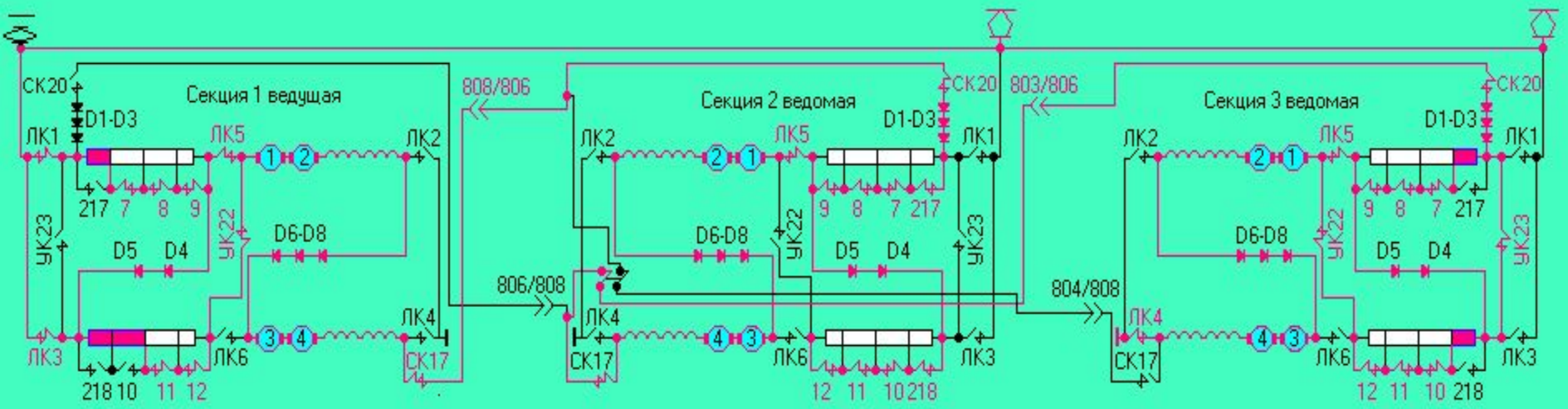


| № Поз | Линейные (ЛК) 1 | 2 | 3 | 4 | 5 | 6 | Реостатные (РК) 217 | 7 | 8 | 9 | 218 | 10 | 11 | 12 | 22 | 17 | 20 | УК 23 | 24 | Линейные (ЛК) 1 | 2 | 3 | 4 | 5 | 6 | Реостатные (РК) 217 | 7 | 8 | 9 | 218 | 10 | 11 | 12 | 22 | 17 | 20 | УК 23 | 24 | Линейные (ЛК) 1 | 2 | 3 | 4 | 5 | 6 | Реостатные (РК) 217 | 7 | 8 | 9 | 218 | 10 | 11 | 12 | 22 | 17 | 20 | УК 23 | 24 |
|---|---|---|---|---|---|---|---|---|---|---|---|---|---|---|---|---|---|---|---|---|---|---|---|---|---|---|---|---|---|---|---|---|---|---|---|---|---|---|---|---|---|---|---|---|---|---|---|---|---|---|---|---|---|---|---|---|---|---|---|
| 1 | ● | | | | | | | | | | | | | | ● | ● | | | | | | | | ● | | ● | ● | ● | ● | ● | ● | ● | ● | | ● | ● | | | | | | | ● | | | | | | | | ● | | ● | | | |
| 2 | ● | | | | | | | | | | | | | | ● | ● | | | | | | | | ● | | ● | ● | ● | ● | ● | ● | ● | ● | | ● | ● | | | | | | | ● | | | | ● | | | | ● | | ● | | | |
| 3 | ● | | | | | | | | | ● | | | | | ● | ● | | | | | | | | ● | | ● | ● | ● | ● | ● | ● | ● | ● | | ● | ● | | | | | | | ● | | | | ● | | | | ● | | ● | | | |
| 4 | ● | | | | | | | | | ● | | | | | ● | ● | | | | | | | | ● | | ● | ● | ● | ● | ● | ● | ● | ● | | ● | ● | | | | | | | ● | | | | | | | | ● | | ● | | | |
| 5 | ● | | | | | | | | ● | ● | | | | | ● | ● | | | | | | | | ● | | ● | ● | ● | ● | ● | ● | ● | ● | | ● | ● | | | | | | | ● | | | | ● | ● | | | ● | | ● | | | |
| 6 | ● | | | | | | | | ● | ● | | | | | ● | ● | | | | | | | | ● | | ● | ● | ● | ● | ● | ● | ● | ● | | ● | ● | | | | | | | ● | | | | ● | ● | | | ● | ● | ● | | | |
| 7 | ● | | ● | | | | | | | | | | | | ● | ● | | | | | | | | ● | | ● | ● | ● | ● | ● | ● | ● | ● | | ● | ● | | | | | | | ● | | | | ● | ● | | | ● | ● | ● | | | |
| 8 | ● | | ● | | ● | | | | | | | | | | ● | ● | | | | | | | | ● | | ● | ● | ● | ● | ● | ● | ● | ● | | ● | ● | | | | | | | ● | | | | ● | ● | | | ● | ● | ● | | | |
| 9 | ● | | ● | | ● | | | | | | | | | | ● | ● | | | | | | | | ● | | ● | ● | ● | ● | ● | ● | ● | ● | | ● | ● | | | | | | | ● | | | | ● | ● | | | ● | ● | ● | | ● | |
| 10 | ● | | ● | | ● | | | | | | | | | | ● | ● | | | | | | | | ● | | ● | ● | ● | ● | ● | ● | ● | ● | | ● | ● | | | | | | | ● | ● | | | | ● | | | ● | ● | ● | | ● | |
| 11 | ● | | ● | | ● | | | | | ● | | | | | ● | ● | | | | | | | | ● | | ● | ● | ● | ● | ● | ● | ● | ● | | ● | ● | | | | | | | ● | ● | | | | ● | | | ● | ● | ● | | ● | |
| 12 | ● | | ● | | ● | | | | | ● | | | | | ● | ● | | | | | | | | ● | | ● | ● | ● | ● | ● | ● | ● | ● | | ● | ● | | | | | | | ● | ● | | | ● | ● | | | ● | ● | ● | | ● | |
| 13 | ● | | ● | | ● | | | | | ● | | | | ● | ● | ● | | | | | | | | ● | | ● | ● | ● | ● | ● | ● | ● | ● | | ● | ● | | | | | | | ● | ● | | | ● | ● | | | ● | ● | ● | | ● | |
| 14 | ● | | ● | | ● | | | | ● | ● | | | | ● | ● | ● | | | | | | | | ● | | ● | ● | ● | ● | ● | ● | ● | ● | | ● | ● | | | | | | | ● | ● | | | ● | ● | | | ● | ● | ● | | ● | |
| 15 | ● | | ● | | ● | | | | ● | ● | | | | ● | ● | ● | | | | | | | | ● | | ● | ● | ● | ● | ● | ● | ● | ● | | ● | ● | | | | | | | ● | ● | | | ● | ● | | | ● | ● | ● | | ● | |
| 16 | ● | | ● | | ● | | | | ● | ● | | | ● | ● | ● | ● | | | | | | | | ● | | ● | ● | ● | ● | ● | ● | ● | ● | | ● | ● | | | | | | | ● | ● | | | ● | ● | | | ● | ● | ● | | ● | |
| 17 | ● | | ● | | ● | | | | ● | ● | | | ● | ● | ● | ● | | | | | | | | ● | | ● | ● | ● | ● | ● | ● | ● | ● | | ● | ● | | | | | | | ● | ● | | | ● | ● | | | ● | ● | ● | | ● | |
| 18 | ● | | ● | | ● | | | ● | ● | ● | | | ● | ● | ● | ● | | | | | | | | ● | | ● | ● | ● | ● | ● | ● | ● | ● | | ● | ● | | | | | | | ● | ● | | | ● | ● | | | ● | ● | ● | | ● | |
| 19 | ● | | ● | | ● | | | ● | ● | ● | | | ● | ● | ● | ● | | | | | | | | ● | | ● | ● | ● | ● | ● | ● | ● | ● | | ● | ● | | | | | | | ● | ● | | | ● | ● | | | ● | ● | ● | | ● | ● |
| 20 | ● | | ● | | ● | | | ● | ● | ● | | ● | ● | ● | ● | ● | | | | | | | | ● | | ● | ● | ● | ● | ● | ● | ● | ● | | ● | ● | | | | | | | ● | ● | | | ● | ● | | | ● | ● | ● | | ● | |
| 21 | ● | | ● | | ● | | | ● | ● | ● | | ● | ● | ● | ● | ● | | | | | | | | ● | | ● | ● | ● | ● | ● | ● | ● | ● | | ● | ● | | | | | | | ● | ● | | | ● | ● | | | ● | ● | ● | | ● | |
| ХП | ● | | ● | | ● | | ● | ● | ● | ● | ● | ● | ● | ● | ● | ● | | | | | | | | ● | | ● | ● | ● | ● | ● | ● | ● | ● | | ● | ● | | | | | | | ● | ● | | | ● | ● | | | ● | ● | ● | | ● | ● |

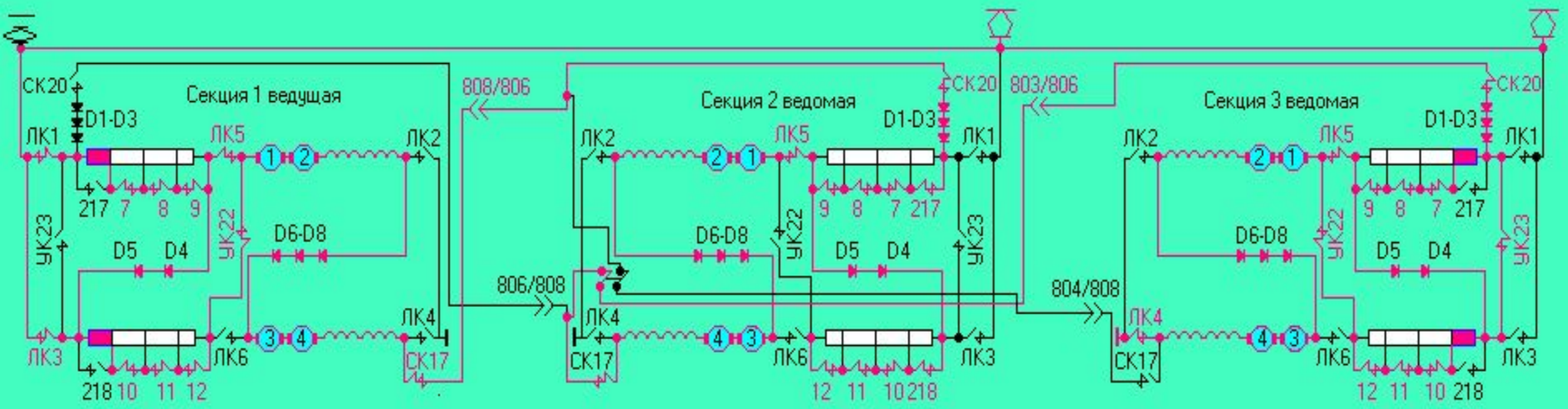


| № Поз | Линейные (ЛК) 1 | 2 | 3 | 4 | 5 | 6 | Реостатные (РК) 217 | 7 | 8 | 9 | 218 | 10 | 11 | 12 | 22 | 17 | 20 | УК 23 | 24 | Линейные (ЛК) 1 | 2 | 3 | 4 | 5 | 6 | Реостатные (РК) 217 | 7 | 8 | 9 | 218 | 10 | 11 | 12 | 22 | 17 | 20 | УК 23 | 24 | Линейные (ЛК) 1 | 2 | 3 | 4 | 5 | 6 | Реостатные (РК) 217 | 7 | 8 | 9 | 218 | 10 | 11 | 12 | 22 | 17 | 20 | УК 23 | 24 |
|---|---|---|---|---|---|---|---|---|---|---|---|---|---|---|---|---|---|---|---|---|---|---|---|---|---|---|---|---|---|---|---|---|---|---|---|---|---|---|---|---|---|---|---|---|---|---|---|---|---|---|---|---|---|---|---|---|---|---|---|
| 1 | ● | | | | | | | | | | | | | | ● | ● | | | | | | | | ● | | ● | ● | ● | ● | ● | ● | ● | ● | | ● | ● | | | | | | | ● | | | | | | | | | | ● | | | | |
| 2 | ● | | | | | | | | | | | | | | ● | ● | | | | | | | | ● | | ● | ● | ● | ● | ● | ● | ● | ● | | ● | ● | | | | | | | ● | | | | ● | | | | | | ● | | | | |
| 3 | ● | | | | | | | | | ● | | | | | ● | ● | | | | | | | | ● | | ● | ● | ● | ● | ● | ● | ● | ● | | ● | ● | | | | | | | ● | | | | ● | | | | | | ● | | | | |
| 4 | ● | | | | | | | | | ● | | | | | ● | ● | | | | | | | | ● | | ● | ● | ● | ● | ● | ● | ● | ● | | ● | ● | | | | | | | ● | | | | | ● | ● | | | | ● | | | | |
| 5 | ● | | | | | | | | ● | ● | | | | | ● | ● | | | | | | | | ● | | ● | ● | ● | ● | ● | ● | ● | ● | | ● | ● | | | | | | | ● | | | | | ● | ● | | | | ● | | | | |
| 6 | ● | | | | | | | | ● | ● | | | | | ● | ● | | | | | | | | ● | | ● | ● | ● | ● | ● | ● | ● | ● | | ● | ● | | | | | | | ● | | | | | ● | ● | | | | ● | ● | | | |
| 7 | ● | | ● | | | | | | | | | | | | ● | ● | | | | | | | | ● | | ● | ● | ● | ● | ● | ● | ● | ● | | ● | ● | | | | | | | ● | | | | | ● | ● | | | | ● | ● | | | |
| 8 | ● | | ● | | ● | | | | | | | | | | ● | ● | | | | | | | | ● | | ● | ● | ● | ● | ● | ● | ● | ● | | ● | ● | | | | | | | ● | | | | | ● | ● | | | | ● | ● | | | |
| 9 | ● | | ● | | ● | | | | | | | | | | ● | ● | | | | | | | | ● | | ● | ● | ● | ● | ● | ● | ● | ● | | ● | ● | | | | | | | ● | | | | | ● | ● | | | | ● | ● | | ● | |
| 10 | ● | | ● | | ● | | | | | | | | | | ● | ● | | | | | | | | ● | | ● | ● | ● | ● | ● | ● | ● | ● | | ● | ● | | | | | | | ● | ● | | | | ● | | | | | ● | ● | | ● | |
| 11 | ● | | ● | | ● | | | | | ● | | | | | ● | ● | | | | | | | | ● | | ● | ● | ● | ● | ● | ● | ● | ● | | ● | ● | | | | | | | ● | ● | | | | ● | | | | | ● | ● | | ● | |
| 12 | ● | | ● | | ● | | | | | ● | | | | | ● | ● | | | | | | | | ● | | ● | ● | ● | ● | ● | ● | ● | ● | | ● | ● | | | | | | | ● | ● | | | | ● | ● | | | | ● | ● | | ● | |
| 13 | ● | | ● | | ● | | | | | ● | | | | ● | ● | ● | | | | | | | | ● | | ● | ● | ● | ● | ● | ● | ● | ● | | ● | ● | | | | | | | ● | ● | | | | ● | ● | | | | ● | ● | | ● | |
| 14 | ● | | ● | | ● | | | | ● | ● | | | | ● | ● | ● | | | | | | | | ● | | ● | ● | ● | ● | ● | ● | ● | ● | | ● | ● | | | | | | | ● | ● | | | | ● | ● | | | | ● | ● | | ● | |
| 15 | ● | | ● | | ● | | | | ● | ● | | | | ● | ● | ● | | | | | | | | ● | | ● | ● | ● | ● | ● | ● | ● | ● | | ● | ● | | | | | | | ● | ● | | | | ● | ● | | | ● | ● | ● | | ● | |
| 16 | ● | | ● | | ● | | | | ● | ● | | | ● | ● | ● | ● | | | | | | | | ● | | ● | ● | ● | ● | ● | ● | ● | ● | | ● | ● | | | | | | | ● | ● | | | | ● | ● | | | ● | ● | ● | | ● | |
| 17 | ● | | ● | | ● | | | | ● | ● | | | ● | ● | ● | ● | | | | | | | | ● | | ● | ● | ● | ● | ● | ● | ● | ● | | ● | ● | | | | | | | ● | ● | | | | ● | ● | | | ● | ● | ● | | ● | |
| 18 | ● | | ● | | ● | | | ● | ● | ● | | | ● | ● | ● | ● | | | | | | | | ● | | ● | ● | ● | ● | ● | ● | ● | ● | | ● | ● | | | | | | | ● | ● | | | | ● | ● | | | ● | ● | ● | | ● | |
| 19 | ● | | ● | | ● | | | ● | ● | ● | | | ● | ● | ● | ● | | | | | | | | ● | | ● | ● | ● | ● | ● | ● | ● | ● | | ● | ● | | | | | | | ● | ● | | | | ● | ● | | ● | ● | ● | ● | | ● | ● |
| 20 | ● | | ● | | ● | | | ● | ● | ● | | ● | ● | ● | ● | ● | | | | | | | | ● | | ● | ● | ● | ● | ● | ● | ● | ● | | ● | ● | | | | | | | ● | ● | | | | ● | ● | | ● | ● | ● | ● | | ● | ● |
| 21 | ● | | ● | | ● | | | ● | ● | ● | | ● | ● | ● | ● | ● | | | | | | | | ● | | ● | ● | ● | ● | ● | ● | ● | ● | | ● | ● | | | | | | | ● | ● | | | ● | ● | ● | ● | ● | ● | ● | ● | | ● | ● |
| ХП | ● | | ● | | ● | | ● | ● | ● | ● | ● | ● | ● | ● | ● | ● | | | | | | | | ● | | ● | ● | ● | ● | ● | ● | ● | ● | | ● | ● | | | | | | | ● | ● | | | ● | ● | ● | ● | ● | ● | ● | ● | | ● | ● |

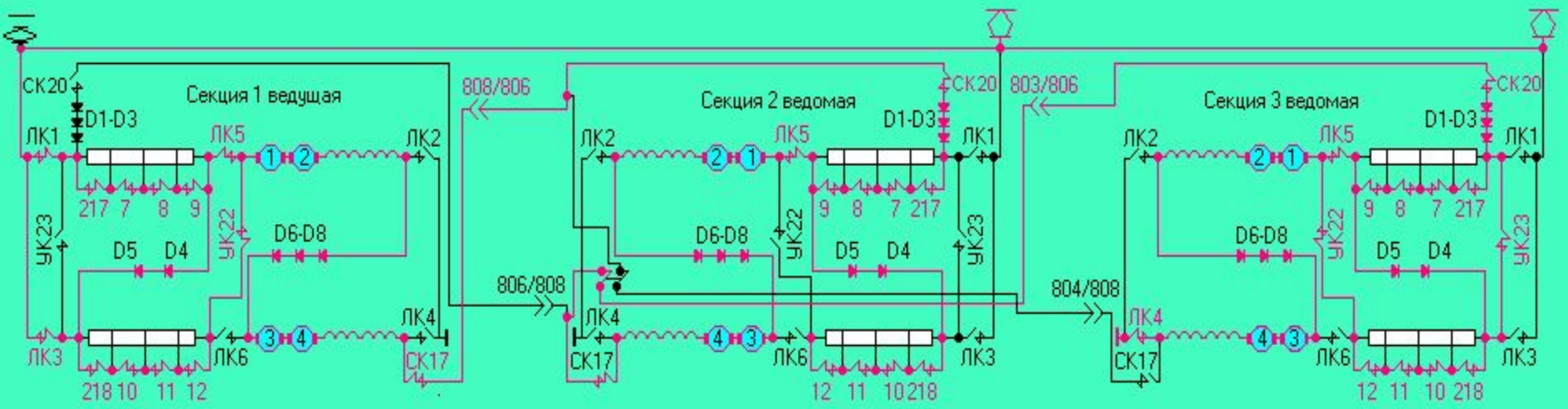


| № Поз | Линейные (ЛК) 1 | 2 | 3 | 4 | 5 | 6 | Реостатные (РК) 217 | 7 | 8 | 9 | 218 | 10 | 11 | 12 | 22 | 17 | 20 | УК 23 | 24 |
|---|---|---|---|---|---|---|---|---|---|---|---|---|---|---|---|---|---|---|---|
| 1 | ● | | | | | | | | | | | | | | ● | ● | | | |
| 2 | ● | | | | | | | | | | | | | | ● | ● | | | |
| 3 | ● | | | | | | | | | ● | | | | | ● | ● | | | |
| 4 | ● | | | | | | | | | ● | | | | | ● | ● | | | |
| 5 | ● | | | | | | | | ● | ● | | | | | ● | ● | | | |
| 6 | ● | | | | | | | | ● | ● | | | | | ● | ● | | | |
| 7 | ● | | ● | | | | | | | | | | | | ● | ● | | | |
| 8 | ● | | ● | | ● | | | | | | | | | | ● | ● | | | |
| 9 | ● | | ● | | ● | | | | | | | | | | ● | ● | | | |
| 10 | ● | | ● | | ● | | | | | | | | | | ● | ● | | | |
| 11 | ● | | ● | | ● | | | | | ● | | | | | ● | ● | | | |
| 12 | ● | | ● | | ● | | | | | ● | | | | | ● | ● | | | |
| 13 | ● | | ● | | ● | | | | | ● | | | | ● | ● | ● | | | |
| 14 | ● | | ● | | ● | | | | ● | ● | | | | ● | ● | ● | | | |
| 15 | ● | | ● | | ● | | | | ● | ● | | | | ● | ● | ● | | | |
| 16 | ● | | ● | | ● | | | | ● | ● | | | ● | ● | ● | ● | | | |
| 17 | ● | | ● | | ● | | | | ● | ● | | | ● | ● | ● | ● | | | |
| 18 | ● | | ● | | ● | | | ● | ● | ● | | | ● | ● | ● | ● | | | |
| 19 | ● | | ● | | ● | | | ● | ● | ● | | | ● | ● | ● | ● | | | |
| 20 | ● | | ● | | ● | | | ● | ● | ● | | ● | ● | ● | ● | ● | | | |
| 21 | ● | | ● | | ● | | | ● | ● | ● | | ● | ● | ● | ● | ● | | | |
| ХП | ● | | ● | | ● | | ● | ● | ● | ● | ● | ● | ● | ● | ● | ● | | | |

| № Поз | Линейные (ЛК) 1 | 2 | 3 | 4 | 5 | 6 | Реостатные (РК) 217 | 7 | 8 | 9 | 218 | 10 | 11 | 12 | 22 | 17 | 20 | УК 23 | 24 |
|---|---|---|---|---|---|---|---|---|---|---|---|---|---|---|---|---|---|---|---|
| 1 | | | | | ● | | ● | ● | ● | ● | ● | ● | ● | ● | | ● | ● | | |
| 2 | | | | | ● | | ● | ● | ● | ● | ● | ● | ● | ● | | ● | ● | | |
| 3 | | | | | ● | | ● | ● | ● | ● | ● | ● | ● | ● | | ● | ● | | |
| 4 | | | | | ● | | ● | ● | ● | ● | ● | ● | ● | ● | | ● | ● | | |
| 5 | | | | | ● | | ● | ● | ● | ● | ● | ● | ● | ● | | ● | ● | | |
| 6 | | | | | ● | | ● | ● | ● | ● | ● | ● | ● | ● | | ● | ● | | |
| 7 | | | | | ● | | ● | ● | ● | ● | ● | ● | ● | ● | | ● | ● | | |
| 8 | | | | | ● | | ● | ● | ● | ● | ● | ● | ● | ● | | ● | ● | | |
| 9 | | | | | ● | | ● | ● | ● | ● | ● | ● | ● | ● | | ● | ● | | |
| 10 | | | | | ● | | ● | ● | ● | ● | ● | ● | ● | ● | | ● | ● | | |
| 11 | | | | | ● | | ● | ● | ● | ● | ● | ● | ● | ● | | ● | ● | | |
| 12 | | | | | ● | | ● | ● | ● | ● | ● | ● | ● | ● | | ● | ● | | |
| 13 | | | | | ● | | ● | ● | ● | ● | ● | ● | ● | ● | | ● | ● | | |
| 14 | | | | | ● | | ● | ● | ● | ● | ● | ● | ● | ● | | ● | ● | | |
| 15 | | | | | ● | | ● | ● | ● | ● | ● | ● | ● | ● | | ● | ● | | |
| 16 | | | | | ● | | ● | ● | ● | ● | ● | ● | ● | ● | | ● | ● | | |
| 17 | | | | | ● | | ● | ● | ● | ● | ● | ● | ● | ● | | ● | ● | | |
| 18 | | | | | ● | | ● | ● | ● | ● | ● | ● | ● | ● | | ● | ● | | |
| 19 | | | | | ● | | ● | ● | ● | ● | ● | ● | ● | ● | | ● | ● | | |
| 20 | | | | | ● | | ● | ● | ● | ● | ● | ● | ● | ● | | ● | ● | | |
| 21 | | | | | ● | | ● | ● | ● | ● | ● | ● | ● | ● | | ● | ● | | |
| ХП | | | | | ● | | ● | ● | ● | ● | ● | ● | ● | ● | | ● | ● | | |

| № Поз | Линейные (ЛК) 1 | 2 | 3 | 4 | 5 | 6 | Реостатные (РК) 217 | 7 | 8 | 9 | 218 | 10 | 11 | 12 | 22 | 17 | 20 | УК 23 | 24 |
|---|---|---|---|---|---|---|---|---|---|---|---|---|---|---|---|---|---|---|---|
| 1 | | | | ● | | | | | | | | | | | ● | | ● | | |
| 2 | | | | ● | | | | | | ● | | | | | ● | | ● | | |
| 3 | | | | ● | | | | | | ● | | | | | ● | | ● | | |
| 4 | | | | ● | | | | | ● | ● | | | | | ● | | ● | | |
| 5 | | | | ● | | | | | ● | ● | | | | | ● | | ● | | |
| 6 | | | | ● | | | | | ● | ● | | | | ● | ● | | ● | | |
| 7 | | | | ● | | | | | ● | ● | | | | ● | ● | | ● | | |
| 8 | | | | ● | | | | | ● | ● | | | | ● | ● | | ● | | |
| 9 | | | | ● | | | | | ● | ● | | | | ● | ● | | ● | ● | |
| 10 | | | | ● | ● | | | | | ● | | | | ● | ● | | ● | ● | |
| 11 | | | | ● | ● | | | | | ● | | | | ● | ● | | ● | ● | |
| 12 | | | | ● | ● | | | | ● | ● | | | | ● | ● | | ● | ● | |
| 13 | | | | ● | ● | | | | ● | ● | | | | ● | ● | | ● | ● | |
| 14 | | | | ● | ● | | | | ● | ● | | | | ● | ● | | ● | ● | |
| 15 | | | | ● | ● | | | | ● | ● | | | ● | ● | ● | | ● | ● | |
| 16 | | | | ● | ● | | | | ● | ● | | | ● | ● | ● | | ● | ● | |
| 17 | | | | ● | ● | | | ● | ● | ● | | | ● | ● | ● | | ● | ● | |
| 18 | | | | ● | ● | | | ● | ● | ● | | | ● | ● | ● | | ● | ● | |
| 19 | | | | ● | ● | | | ● | ● | ● | | ● | ● | ● | ● | | ● | ● | |
| 20 | | | | ● | ● | | | ● | ● | ● | | ● | ● | ● | ● | | ● | ● | |
| 21 | | | | ● | ● | | ● | ● | ● | ● | ● | ● | ● | ● | ● | | ● | ● | |
| ХП | | | | ● | ● | | ● | ● | ● | ● | ● | ● | ● | ● | ● | | ● | ● | |

Упрощенная схема работы трех секционного сцепа на "СП" соединении тяговых двигателей ( 6 двигателей последовательно)

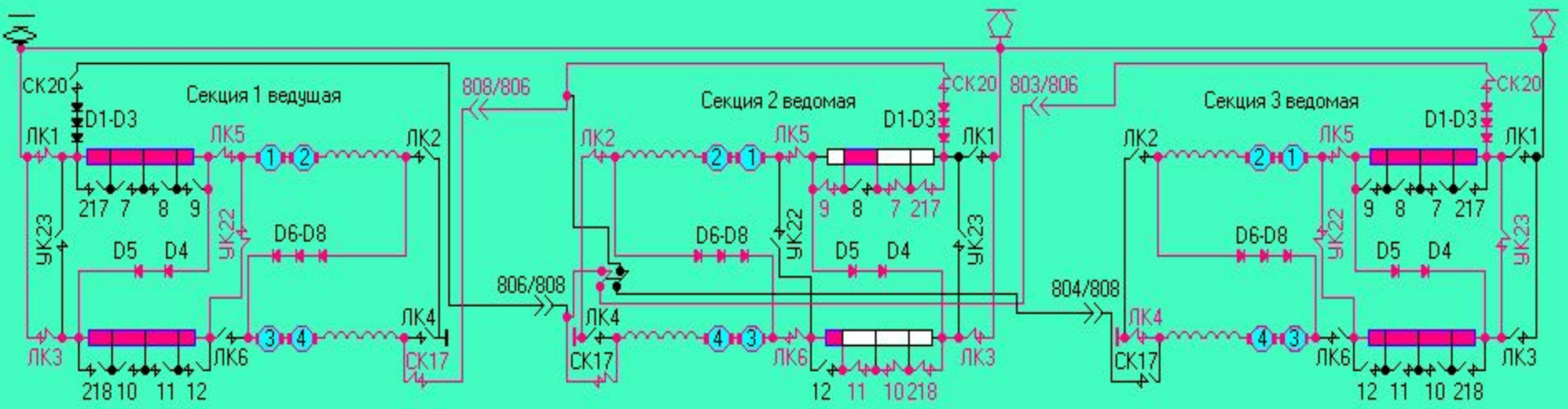


Порядок включения линейных (ЛК), реостатных (РК), уравнительных (УК) контакторов на "С" соединении трех секционного сцепа ( 6 тяговых двигателей последовательно)

| № | Линейные (ЛК) | | | | | | Реостатные (РК) | | | | | | | | | | | | УК | | Линейные (ЛК) | | | | | | Реостатные (РК) | | | | | | | | | | | | УК | | Линейные (ЛК) | | | | | | Реостатные (РК) | | | | | | | | | | | | УК | |
|---|---|---|---|---|---|---|---|---|---|---|---|---|---|---|---|---|---|---|---|---|---|---|---|---|---|---|---|---|---|---|---|---|---|---|---|---|---|---|---|---|---|---|---|---|---|---|---|---|---|---|---|---|---|---|---|---|---|---|---|---|
| Поз | 1 | 2 | 3 | 4 | 5 | 6 | 217 | 7 | 8 | 9 | 218 | 10 | 11 | 12 | 22 | 17 | 20 | 23 | 24 | 1 | 2 | 3 | 4 | 5 | 6 | 217 | 7 | 8 | 9 | 218 | 10 | 11 | 12 | 22 | 17 | 20 | 23 | 24 | 1 | 2 | 3 | 4 | 5 | 6 | 217 | 7 | 8 | 9 | 218 | 10 | 11 | 12 | 22 | 17 | 20 | 23 | 24 |
| 1 | ● | | ● | | ● | | | | | | | | | | ● | ● | | | | | ● | ● | | ● | ● | ● | ● | | ● | ● | ● | ● | | | ● | ● | | | | | ● | ● | | | | | | | | | | | ● | | ● | ● | | |
| 2 | ● | | ● | | ● | | | | | | | | | | ● | ● | | | | | ● | ● | | ● | ● | ● | ● | ● | ● | ● | ● | ● | | | ● | ● | | | | | ● | ● | | | | | | | | | | | ● | | ● | ● | | |
| 3 | ● | | ● | | ● | | | | | ● | | | | | ● | ● | | | | | ● | ● | | ● | ● | ● | ● | ● | ● | ● | ● | ● | | | ● | ● | | | | | ● | ● | | | | | ● | | | | | | ● | | ● | ● | | |
| 4 | ● | | ● | | ● | | | | | ● | | | ● | | ● | ● | | | | | ● | ● | | ● | ● | ● | ● | ● | ● | ● | ● | ● | | | ● | ● | | | | | ● | ● | | | | | ● | | | | | | ● | | ● | ● | | |
| 5 | ● | | ● | | ● | | | ● | | ● | | | ● | | ● | ● | | | | | ● | ● | | ● | ● | ● | ● | ● | ● | ● | ● | ● | | | ● | ● | | | | | ● | ● | | | | | ● | | | | | | ● | | ● | ● | | |
| 6 | ● | | ● | | ● | | ● | ● | | ● | | | ● | | ● | ● | | | | | ● | ● | | ● | ● | ● | ● | ● | ● | ● | ● | ● | | | ● | ● | | | | | ● | ● | | | | | ● | | | | | | ● | | ● | ● | | |
| 7 | ● | | ● | | ● | | ● | ● | | ● | | ● | ● | | ● | ● | | | | | ● | ● | | ● | ● | ● | ● | ● | ● | ● | ● | ● | | | ● | ● | | | | | ● | ● | | | | | ● | | ● | | | | ● | | ● | ● | | |
| 8 | ● | | ● | | ● | | ● | ● | | ● | | | | ● | ● | ● | | | | | ● | ● | | ● | ● | ● | ● | ● | ● | ● | ● | ● | | | ● | ● | | | | | ● | ● | | | | | ● | | | | | ● | ● | | ● | ● | | |
| 9 | ● | | ● | | ● | | ● | ● | | ● | | ● | | ● | ● | ● | | | | | ● | ● | | ● | ● | ● | ● | ● | ● | ● | ● | ● | | | ● | ● | | | | | ● | ● | | | | | ● | | ● | | | ● | ● | | ● | ● | | |
| 10 | ● | | ● | | ● | | ● | ● | | ● | ● | ● | | ● | ● | ● | | | | | ● | ● | | ● | ● | ● | ● | ● | ● | ● | ● | ● | | | ● | ● | | | | | ● | ● | | | | | ● | | ● | ● | | ● | ● | | ● | ● | | |
| 11 | ● | | ● | | ● | | | | ● | ● | | | ● | | ● | ● | | | | | ● | ● | | ● | ● | ● | ● | ● | ● | ● | ● | ● | | | ● | ● | | | | | ● | ● | | | | | | | ● | ● | | | ● | | ● | ● | | |
| 12 | ● | | ● | | ● | | | | ● | ● | ● | ● | | ● | ● | ● | | | | | ● | ● | | ● | ● | ● | ● | ● | ● | ● | ● | ● | | | ● | ● | | | | | ● | ● | | | | | | | ● | ● | ● | ● | ● | | ● | ● | | |
| 13 | ● | | ● | | ● | | ● | | ● | ● | ● | ● | | ● | ● | ● | | | | | ● | ● | | ● | ● | ● | ● | ● | ● | ● | ● | ● | | | ● | ● | | | | | ● | ● | | | | | ● | | ● | ● | ● | ● | | | ● | ● | | |
| 14 | ● | | ● | | ● | | | | ● | ● | | | ● | ● | ● | ● | | | | | ● | ● | | ● | ● | ● | ● | ● | ● | ● | ● | ● | | | ● | ● | | | | | ● | ● | | | | | | | ● | ● | | | ● | ● | ● | ● | | |
| 15 | ● | | ● | | ● | | | ● | ● | ● | | | ● | ● | ● | ● | | | | | ● | ● | | ● | ● | ● | ● | ● | ● | ● | ● | ● | | | ● | ● | | | | | ● | ● | | | | | | ● | ● | ● | | | ● | ● | ● | ● | ● | | |
| 16 | ● | | ● | | ● | | | ● | ● | ● | | ● | ● | ● | ● | ● | | | | | ● | ● | | ● | ● | ● | ● | ● | ● | ● | ● | ● | | | ● | ● | | | | | ● | ● | | | | | | ● | ● | ● | | ● | ● | ● | ● | ● | | |
| ХП | ● | | ● | | ● | | ● | ● | ● | ● | ● | ● | ● | ● | ● | ● | | | | | ● | ● | | ● | ● | ● | ● | ● | ● | ● | ● | ● | | | ● | ● | | | | | ● | ● | | | | | ● | ● | ● | ● | ● | ● | ● | ● | ● | ● | | |

Упрощенная схема работы трех секционного сцепа на "СП" соединении тяговых двигателей ( 6 двигателей последовательно)

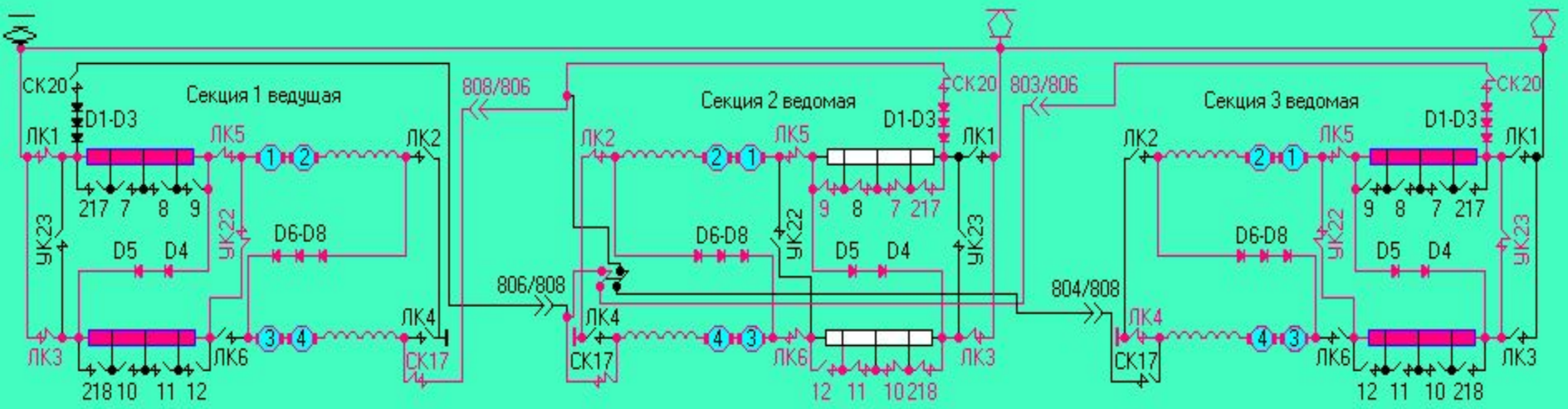


Порядок включения линейных (ЛК), реостатных (РК), уравнительных (УК) контакторов на "С" соединении трех секционного сцепа ( 6 тяговых двигателей последовательно)

| № | Линейные (ЛК) | | | | | | Реостатные (РК) | | | | | | | | | | | УК | | Линейные (ЛК) | | | | | | Реостатные (РК) | | | | | | | | | | | УК | | Линейные (ЛК) | | | | | | Реостатные (РК) | | | | | | | | | | | УК | |
|---|---|---|---|---|---|---|---|---|---|---|---|---|---|---|---|---|---|---|---|---|---|---|---|---|---|---|---|---|---|---|---|---|---|---|---|---|---|---|---|---|---|---|---|---|---|---|---|---|---|---|---|---|---|---|---|---|---|
| Поз | 1 | 2 | 3 | 4 | 5 | 6 | 217 | 7 | 8 | 9 | 218 | 10 | 11 | 12 | 22 | 17 | 20 | 23 | 24 | 1 | 2 | 3 | 4 | 5 | 6 | 217 | 7 | 8 | 9 | 218 | 10 | 11 | 12 | 22 | 17 | 20 | 23 | 24 | 1 | 2 | 3 | 4 | 5 | 6 | 217 | 7 | 8 | 9 | 218 | 10 | 11 | 12 | 22 | 17 | 20 | 23 | 24 |
| 1 | ● | | ● | | ● | | | | | | | | | | ● | ● | | | | | ● | ● | | ● | ● | ● | ● | | ● | ● | ● | ● | | | ● | ● | | | | | | ● | ● | | | | | | | | | | | ● | ● | ● | ● |
| 2 | ● | | ● | | ● | | | | | | | | | | ● | ● | | | | | ● | ● | | ● | ● | ● | ● | ● | ● | ● | ● | ● | | ● | ● | | | | | | | ● | ● | | | | | | | | | | ● | ● | ● | ● |
| 3 | ● | | ● | | ● | | | | | ● | | | | | ● | ● | | | | | ● | ● | | ● | ● | ● | ● | ● | ● | ● | ● | ● | | ● | ● | | | | | | | ● | ● | | | | ● | | | | | | ● | ● | ● | ● |
| 4 | ● | | ● | | ● | | | | | ● | | | ● | | ● | ● | | | | | ● | ● | | ● | ● | ● | ● | ● | ● | ● | ● | ● | | ● | ● | | | | | | | ● | ● | | | | ● | | | | | | ● | ● | ● | ● |
| 5 | ● | | ● | | ● | | | ● | | ● | | | ● | | ● | ● | | | | | ● | ● | | ● | ● | ● | ● | ● | ● | ● | ● | ● | | ● | ● | | | | | | | ● | ● | | | ● | ● | | | | | | ● | ● | ● | ● |
| 6 | ● | | ● | | ● | | ● | ● | | ● | | | ● | | ● | ● | | | | | ● | ● | | ● | ● | ● | ● | ● | ● | ● | ● | ● | | ● | ● | | | | | | | ● | ● | | | ● | ● | | | | | | ● | ● | ● | ● |
| 7 | ● | | ● | | ● | | ● | ● | | ● | | ● | ● | | ● | ● | | | | | ● | ● | | ● | ● | ● | ● | ● | ● | ● | ● | ● | | ● | ● | | | | | | | ● | ● | | | ● | ● | | ● | | | | ● | ● | ● | ● |
| 8 | ● | | ● | | ● | | ● | ● | | ● | | | | ● | ● | ● | | | | | ● | ● | | ● | ● | ● | ● | ● | ● | ● | ● | ● | | ● | ● | | | | | | | ● | ● | | | ● | ● | | | ● | ● | | ● | ● | ● | ● |
| 9 | ● | | ● | | ● | | ● | ● | | ● | | ● | | ● | ● | ● | | | | | ● | ● | | ● | ● | ● | ● | ● | ● | ● | ● | ● | | ● | ● | | | | | | | ● | ● | | | ● | ● | | ● | ● | ● | | ● | ● | ● | ● |
| 10 | ● | | ● | | ● | | ● | ● | | ● | ● | ● | | ● | ● | ● | | | | | ● | ● | | ● | ● | ● | ● | ● | ● | ● | ● | ● | | ● | ● | | | | | | | ● | ● | | | ● | ● | ● | ● | ● | ● | | ● | ● | ● | ● |
| 11 | ● | | ● | | ● | | | | ● | ● | | | | ● | ● | ● | | | | | ● | ● | | ● | ● | ● | ● | ● | ● | ● | ● | ● | | ● | ● | | | | | | | ● | ● | | | | | ● | ● | | | ● | ● | ● | ● | ● | ● |
| 12 | ● | | ● | | ● | | | | ● | ● | ● | ● | | ● | ● | ● | | | | | ● | ● | | ● | ● | ● | ● | ● | ● | ● | ● | ● | | ● | ● | | | | | | | ● | ● | | | | | ● | ● | ● | ● | ● | ● | ● | ● | ● | ● |
| 13 | ● | | ● | | ● | | ● | | ● | ● | ● | ● | | ● | ● | ● | | | | | ● | ● | | ● | ● | ● | ● | ● | ● | ● | ● | ● | | ● | ● | | | | | | | ● | ● | | ● | | ● | ● | ● | ● | | ● | ● | ● | ● | ● |
| 14 | ● | | ● | | ● | | | | ● | ● | | | ● | ● | ● | ● | | | | | ● | ● | | ● | ● | ● | ● | ● | ● | ● | ● | ● | | ● | ● | | | | | | | ● | ● | | | | | ● | ● | ● | ● | | ● | ● | ● | ● | ● |
| 15 | ● | | ● | | ● | | | ● | ● | ● | | | ● | ● | ● | ● | | | | | ● | ● | | ● | ● | ● | ● | ● | ● | ● | ● | ● | | ● | ● | | | | | | | ● | ● | | | ● | ● | ● | | | ● | ● | ● | ● | ● | ● |
| 16 | ● | | ● | | ● | | | ● | ● | ● | | | ● | ● | ● | ● | | | | | ● | ● | | ● | ● | ● | ● | ● | ● | ● | ● | ● | | ● | ● | | | | | | | ● | ● | | | ● | ● | ● | | ● | ● | ● | ● | ● | ● | ● |
| ХП | ● | | ● | | ● | | ● | ● | ● | ● | ● | ● | ● | ● | ● | ● | | | | | ● | ● | | ● | ● | ● | ● | ● | ● | ● | ● | ● | | ● | ● | | | | | | | ● | ● | | | ● | ● | ● | ● | ● | ● | ● | ● | ● | ● |

Упрощенная схема работы трех секционного сцепа на "СП" соединении тяговых двигателей ( 6 двигателей последовательно)

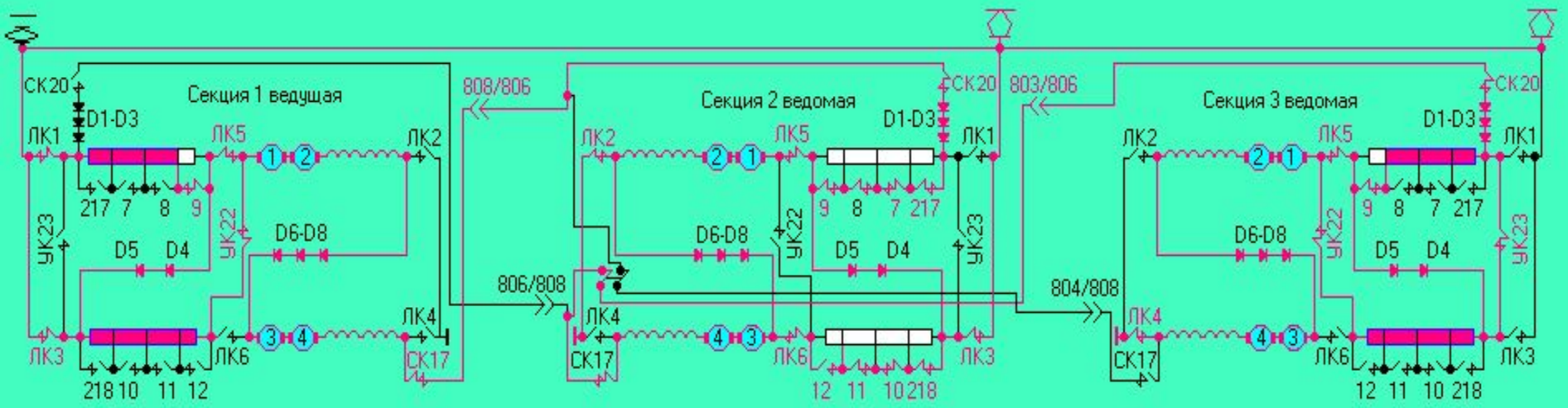


Порядок включения линейных (ЛК), реостатных (РК), уравнительных (УК) контакторов на "С" соединении трех секционного сцепа ( 6 тяговых двигателей последовательно)

| № | Линейные (ЛК) | | | | | | Реостатные (РК) | | | | | | | | | | | | УК | | Линейные (ЛК) | | | | | | Реостатные (РК) | | | | | | | | | | | | УК | | Линейные (ЛК) | | | | | | Реостатные (РК) | | | | | | | | | | | | УК | |
|---|---|---|---|---|---|---|---|---|---|---|---|---|---|---|---|---|---|---|---|---|---|---|---|---|---|---|---|---|---|---|---|---|---|---|---|---|---|---|---|---|---|---|---|---|---|---|---|---|---|---|---|---|---|---|---|---|---|---|---|---|
| Поз | 1 | 2 | 3 | 4 | 5 | 6 | 217 | 7 | 8 | 9 | 218 | 10 | 11 | 12 | 22 | 17 | 20 | | 23 | 24 | 1 | 2 | 3 | 4 | 5 | 6 | 217 | 7 | 8 | 9 | 218 | 10 | 11 | 12 | 22 | 17 | 20 | | 23 | 24 | 1 | 2 | 3 | 4 | 5 | 6 | 217 | 7 | 8 | 9 | 218 | 10 | 11 | 12 | 22 | 17 | 20 | | 23 | 24 |
| 1 | ● | | ● | | ● | | | | | | | | | | ● | ● | | | | | | ● | ● | | ● | ● | ● | ● | | ● | ● | ● | ● | | | ● | ● | | | | | | | ● | ● | | | | | | | | | | | ● | ● | | ● | ● | |
| 2 | ● | | ● | | ● | | | | | | | | | | ● | ● | | | | | | ● | ● | | ● | ● | ● | ● | ● | ● | ● | ● | ● | ● | | | ● | ● | | | | | | | ● | ● | | | | | | | | | | | ● | ● | | ● | ● | |
| 3 | ● | | ● | | ● | | | | | ● | | | | | ● | ● | | | | | | ● | ● | | ● | ● | ● | ● | ● | ● | ● | ● | ● | ● | | | ● | ● | | | | | | | ● | ● | | | | ● | | | | | | | ● | ● | | ● | ● | |
| 4 | ● | | ● | | ● | | | | | ● | | | ● | | ● | ● | | | | | | ● | ● | | ● | ● | ● | ● | ● | ● | ● | ● | ● | ● | | | ● | ● | | | | | | | ● | ● | | | | ● | | | | | | | ● | ● | | ● | ● | |
| 5 | ● | | ● | | ● | | | | ● | ● | | | ● | | ● | ● | | | | | | ● | ● | | ● | ● | ● | ● | ● | ● | ● | ● | ● | ● | | | ● | ● | | | | | | | ● | ● | | | | ● | | | | | | | ● | ● | | ● | ● | |
| 6 | ● | | ● | | ● | | ● | ● | | ● | | | ● | | ● | ● | | | | | | ● | ● | | ● | ● | ● | ● | ● | ● | ● | ● | ● | ● | | | ● | ● | | | | | | | ● | ● | | | | ● | | | | | | | ● | ● | | ● | ● | |
| 7 | ● | | ● | | ● | | ● | ● | | ● | | ● | ● | | ● | ● | | | | | | ● | ● | | ● | ● | ● | ● | ● | ● | ● | ● | ● | ● | | | ● | ● | | | | | | | ● | ● | | | | ● | | ● | | | | | ● | ● | | ● | ● | |
| 8 | ● | | ● | | ● | | ● | ● | | ● | | | | ● | ● | ● | | | | | | ● | ● | | ● | ● | ● | ● | ● | ● | ● | ● | ● | ● | | | ● | ● | | | | | | | ● | ● | | | | ● | | | ● | ● | | | ● | ● | | ● | ● | |
| 9 | ● | | ● | | ● | | ● | ● | | ● | | ● | | ● | ● | ● | | | | | | ● | ● | | ● | ● | ● | ● | ● | ● | ● | ● | ● | ● | | | ● | ● | | | | | | | ● | ● | | | | ● | | ● | | ● | ● | | ● | ● | | ● | ● | |
| 10 | ● | | ● | | ● | | ● | ● | | ● | ● | ● | | ● | ● | ● | | | | | | ● | ● | | ● | ● | ● | ● | ● | ● | ● | ● | ● | ● | | | ● | ● | | | | | | | ● | ● | | | | ● | | ● | ● | ● | ● | | ● | ● | | ● | ● | |
| 11 | ● | | ● | | ● | | | | ● | ● | | | | ● | ● | ● | | | | | | ● | ● | | ● | ● | ● | ● | ● | ● | ● | ● | ● | ● | | | ● | ● | | | | | | | ● | ● | | | | | | ● | ● | | | ● | ● | | ● | ● | | ● | ● | |
| 12 | ● | | ● | | ● | | | | ● | ● | ● | ● | | ● | ● | ● | | | | | | ● | ● | | ● | ● | ● | ● | ● | ● | ● | ● | ● | ● | | | ● | ● | | | | | | | ● | ● | | | | | | ● | ● | ● | ● | ● | ● | | ● | ● | |
| 13 | ● | | ● | | ● | | ● | | ● | ● | ● | ● | | ● | ● | ● | | | | | | ● | ● | | ● | ● | ● | ● | ● | ● | ● | ● | ● | ● | | | ● | ● | | | | | | | ● | ● | | | | | | ● | ● | ● | ● | ● | ● | | ● | ● | |
| 14 | ● | | ● | | ● | | | | ● | ● | | | ● | ● | ● | ● | | | | | | ● | ● | | ● | ● | ● | ● | ● | ● | ● | ● | ● | ● | | | ● | ● | | | | | | | ● | ● | | | | | | | | ● | ● | ● | ● | ● | | ● | ● | |
| 15 | ● | | ● | | ● | | | ● | ● | ● | | | ● | ● | ● | ● | | | | | | ● | ● | | ● | ● | ● | ● | ● | ● | ● | ● | ● | ● | | | ● | ● | | | | | | | ● | ● | | | | | | | ● | ● | ● | ● | ● | | ● | ● | |
| 16 | ● | | ● | | ● | | | ● | ● | ● | | ● | ● | ● | ● | ● | | | | | | ● | ● | | ● | ● | ● | ● | ● | ● | ● | ● | ● | ● | | | ● | ● | | | | | | | ● | ● | | | | | | | ● | ● | ● | ● | ● | | ● | ● | |
| ХП | ● | | ● | | ● | | ● | ● | ● | ● | ● | ● | ● | ● | ● | ● | | | | | | ● | ● | | ● | ● | ● | ● | ● | ● | ● | ● | ● | ● | | | ● | ● | | | | | | | ● | ● | | | | | | | ● | ● | ● | ● | ● | | ● | ● | |

Упрощенная схема работы трех секционного сцепа на "СП" соединении тяговых двигателей ( 6 двигателей последовательно)

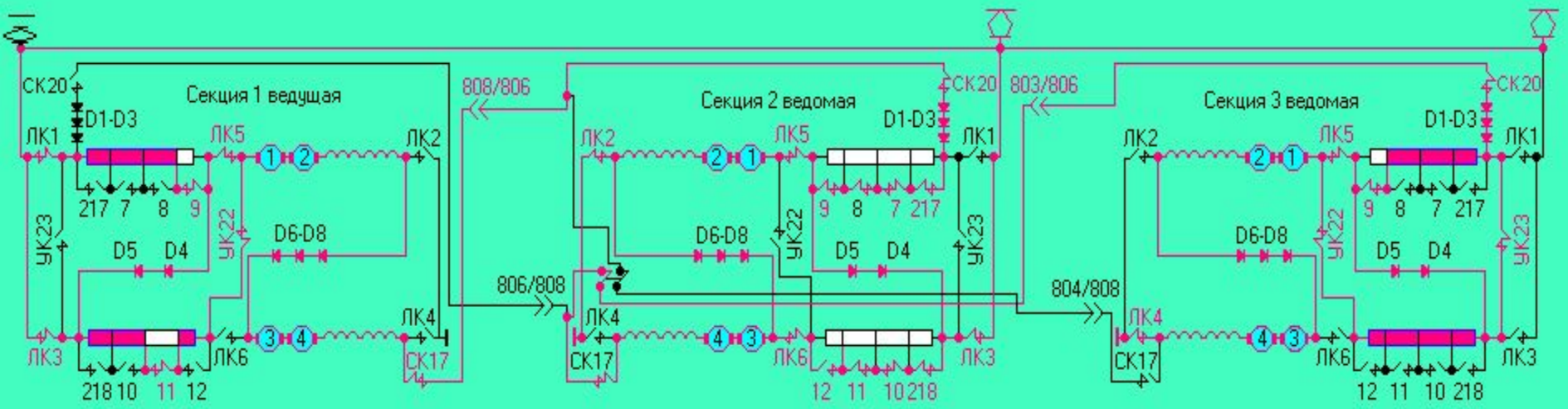


Порядок включения линейных (ЛК), реостатных (РК), уравнительных (УК) контакторов на "С" соединении трех секционного сцепа ( 6 тяговых двигателей последовательно)

| № | Линейные (ЛК) | | | | | | Реостатные (РК) | | | | | | | | | | | УК | | Линейные (ЛК) | | | | | | Реостатные (РК) | | | | | | | | | | | УК | | Линейные (ЛК) | | | | | | Реостатные (РК) | | | | | | | | | | | УК | |
|---|---|---|---|---|---|---|---|---|---|---|---|---|---|---|---|---|---|---|---|---|---|---|---|---|---|---|---|---|---|---|---|---|---|---|---|---|---|---|---|---|---|---|---|---|---|---|---|---|---|---|---|---|---|---|---|---|---|
| Поз | 1 | 2 | 3 | 4 | 5 | 6 | 217 | 7 | 8 | 9 | 218 | 10 | 11 | 12 | 22 | 17 | 20 | 23 | 24 | 1 | 2 | 3 | 4 | 5 | 6 | 217 | 7 | 8 | 9 | 218 | 10 | 11 | 12 | 22 | 17 | 20 | 23 | 24 | 1 | 2 | 3 | 4 | 5 | 6 | 217 | 7 | 8 | 9 | 218 | 10 | 11 | 12 | 22 | 17 | 20 | 23 | 24 |
| 1 | ● | | ● | | ● | | | | | | | | | | ● | ● | | | | | ● | ● | | ● | ● | ● | ● | | ● | ● | ● | ● | | | ● | ● | | | | | ● | ● | | | | | | | | | | ● | | ● | ● | | |
| 2 | ● | | ● | | ● | | | | | | | | | | ● | ● | | | | | ● | ● | | ● | ● | ● | ● | ● | ● | ● | ● | ● | | | ● | ● | | | | | ● | ● | | | | | | | | | | ● | | ● | ● | | |
| 3 | ● | | ● | | ● | | | | | ● | | | | | ● | ● | | | | | ● | ● | | ● | ● | ● | ● | ● | ● | ● | ● | ● | | | ● | ● | | | | | ● | ● | | | | | ● | | | | | ● | | ● | ● | | |
| 4 | ● | | ● | | ● | | | | | ● | | | ● | | ● | ● | | | | | ● | ● | | ● | ● | ● | ● | ● | ● | ● | ● | ● | | | ● | ● | | | | | ● | ● | | | | | ● | | | | | ● | | ● | ● | | |
| 5 | ● | | ● | | ● | | | ● | | ● | | | ● | | ● | ● | | | | | ● | ● | | ● | ● | ● | ● | ● | ● | ● | ● | ● | | | ● | ● | | | | | ● | ● | | | | | | | | | | ● | | ● | ● | | |
| 6 | ● | | ● | | ● | | ● | ● | | ● | | | ● | | ● | ● | | | | | ● | ● | | ● | ● | ● | ● | ● | ● | ● | ● | ● | | | ● | ● | | | | | ● | ● | | | ● | ● | | | | | | ● | | ● | ● | | |
| 7 | ● | | ● | | ● | | ● | ● | | ● | | ● | ● | | ● | ● | | | | | ● | ● | | ● | ● | ● | ● | ● | ● | ● | ● | ● | | | ● | ● | | | | | ● | ● | | | ● | ● | | | ● | | | ● | | ● | ● | | |
| 8 | ● | | ● | | ● | | ● | ● | | ● | | | | ● | ● | ● | | | | | ● | ● | | ● | ● | ● | ● | ● | ● | ● | ● | ● | | | ● | ● | | | | | ● | ● | | | ● | ● | | | | ● | ● | ● | | ● | ● | | |
| 9 | ● | | ● | | ● | | ● | ● | | ● | | ● | | ● | ● | ● | | | | | ● | ● | | ● | ● | ● | ● | ● | ● | ● | ● | ● | | | ● | ● | | | | | ● | ● | | | ● | ● | | | ● | | ● | ● | ● | ● | ● | | |
| 10 | ● | | ● | | ● | | ● | ● | | ● | ● | ● | | ● | ● | ● | | | | | ● | ● | | ● | ● | ● | ● | ● | ● | ● | ● | ● | | | ● | ● | | | | | ● | ● | | | ● | ● | | ● | ● | ● | ● | ● | ● | ● | ● | | |
| 11 | ● | | ● | | ● | | | | ● | ● | | | | ● | ● | ● | | | | | ● | ● | | ● | ● | ● | ● | ● | ● | ● | ● | ● | | | ● | ● | | | | | ● | ● | | | | | ● | ● | ● | | | ● | ● | ● | | ● | ● | | |
| 12 | ● | | ● | | ● | | | | ● | ● | ● | ● | | ● | ● | ● | | | | | ● | ● | | ● | ● | ● | ● | ● | ● | ● | ● | ● | | | ● | ● | | | | | ● | ● | | | | | ● | ● | ● | ● | | ● | ● | ● | | ● | ● | | |
| 13 | ● | | ● | | ● | | ● | | ● | ● | ● | ● | | ● | ● | ● | | | | | ● | ● | | ● | ● | ● | ● | ● | ● | ● | ● | ● | | | ● | ● | | | | | ● | ● | | | ● | | ● | ● | ● | ● | | ● | ● | ● | | ● | ● | | |
| 14 | ● | | ● | | ● | | | | ● | ● | | | ● | ● | ● | ● | | | | | ● | ● | | ● | ● | ● | ● | ● | ● | ● | ● | ● | | | ● | ● | | | | | ● | ● | | | | | ● | ● | | | ● | ● | ● | ● | ● | ● | | |
| 15 | ● | | ● | | ● | | | ● | ● | ● | | | ● | ● | ● | ● | | | | | ● | ● | | ● | ● | ● | ● | ● | ● | ● | ● | ● | | | ● | ● | | | | | ● | ● | | | | ● | ● | ● | | | ● | ● | ● | ● | ● | ● | | |
| 16 | ● | | ● | | ● | | | ● | ● | ● | | ● | ● | ● | ● | ● | | | | | ● | ● | | ● | ● | ● | ● | ● | ● | ● | ● | ● | | | ● | ● | | | | | ● | ● | | | | ● | ● | ● | | ● | ● | ● | ● | ● | ● | | |
| ХП | ● | | ● | | ● | | ● | ● | ● | ● | ● | ● | ● | ● | ● | ● | | | | | ● | ● | | ● | ● | ● | ● | ● | ● | ● | ● | ● | | | ● | ● | | | | | ● | ● | | | ● | ● | ● | ● | ● | ● | ● | ● | ● | ● | ● | | |

Упрощенная схема работы трех секционного сцепа на "СП" соединении тяговых двигателей ( 6 двигателей последовательно)

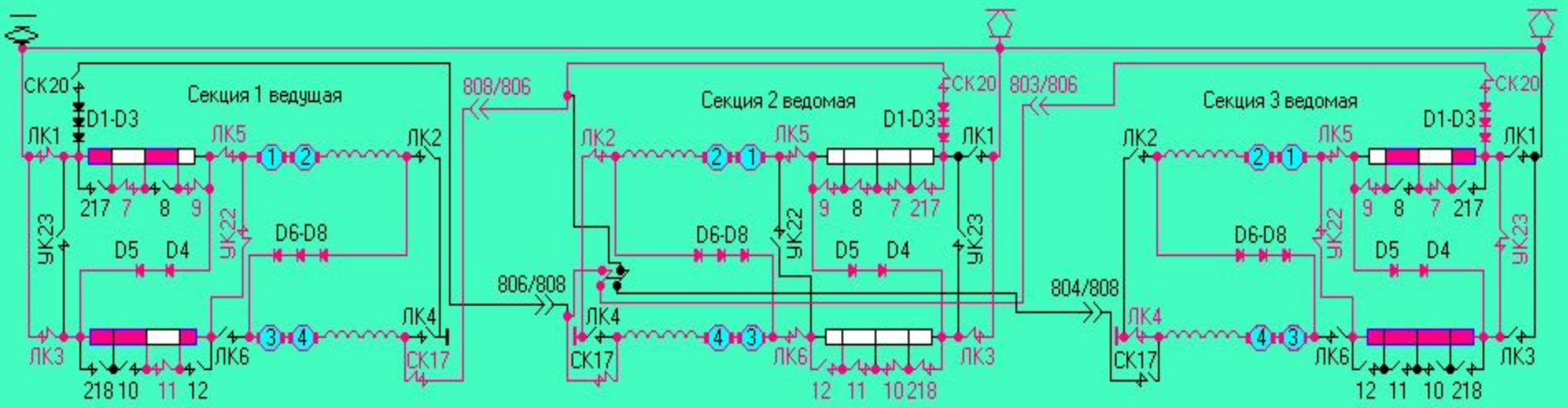


Порядок включения линейных (ЛК), реостатных (РК), уравнительных (УК) контакторов на "С" соединении трех секционного сцепа ( 6 тяговых двигателей последовательно)

| № | Линейные (ЛК) | | | | | | Реостатные (РК) | | | | | | | | | | | | УК | | Линейные (ЛК) | | | | | | Реостатные (РК) | | | | | | | | | | | | УК | | Линейные (ЛК) | | | | | | Реостатные (РК) | | | | | | | | | | | | УК | |
|---|---|---|---|---|---|---|---|---|---|---|---|---|---|---|---|---|---|---|---|---|---|---|---|---|---|---|---|---|---|---|---|---|---|---|---|---|---|---|---|---|---|---|---|---|---|---|---|---|---|---|---|---|---|---|---|---|---|---|---|---|
| Поз | 1 | 2 | 3 | 4 | 5 | 6 | 217 | 7 | 8 | 9 | 218 | 10 | 11 | 12 | 22 | 17 | 20 | | 23 | 24 | 1 | 2 | 3 | 4 | 5 | 6 | 217 | 7 | 8 | 9 | 218 | 10 | 11 | 12 | 22 | 17 | 20 | | 23 | 24 | 1 | 2 | 3 | 4 | 5 | 6 | 217 | 7 | 8 | 9 | 218 | 10 | 11 | 12 | 22 | 17 | 20 | | 23 | 24 |
| 1 | ● | | ● | | ● | | | | | | | | | | ● | ● | | | | | | ● | ● | | ● | ● | ● | ● | | ● | ● | ● | ● | | | ● | ● | | | | | | | ● | ● | | | | | | | | | | | ● | ● | | ● | | |
| 2 | ● | | ● | | ● | | | | | | | | | | ● | ● | | | | | | ● | ● | | ● | ● | ● | ● | ● | ● | ● | ● | ● | ● | | | ● | ● | | | | | | | ● | ● | | | | | | | | | | | ● | ● | | ● | | |
| 3 | ● | | ● | | ● | | | | | ● | | | | | ● | ● | | | | | | ● | ● | | ● | ● | ● | ● | ● | ● | ● | ● | ● | ● | | | ● | ● | | | | | | | ● | ● | | | | | | | | | | | ● | ● | | ● | | |
| 4 | ● | | ● | | ● | | | | | ● | | | ● | | ● | ● | | | | | | ● | ● | | ● | ● | ● | ● | ● | ● | ● | ● | ● | ● | | | ● | ● | | | | | | | ● | ● | | | | | | | | | | | ● | ● | | ● | | |
| 5 | ● | | ● | | ● | | | ● | | ● | | | ● | | ● | ● | | | | | | ● | ● | | ● | ● | ● | ● | ● | ● | ● | ● | ● | ● | | | ● | ● | | | | | | | ● | ● | | | | | | | | | | | ● | ● | | ● | | |
| 6 | ● | | ● | | ● | | ● | ● | | ● | | | ● | | ● | ● | | | | | | ● | ● | | ● | ● | ● | ● | ● | ● | ● | ● | ● | ● | | | ● | ● | | | | | | | ● | ● | | | | | | | | | | | ● | ● | | ● | | |
| 7 | ● | | ● | | ● | | ● | ● | | ● | | ● | ● | | ● | ● | | | | | | ● | ● | | ● | ● | ● | ● | ● | ● | ● | ● | ● | ● | | | ● | ● | | | | | | | ● | ● | | | | | | | | | | | ● | ● | | ● | | |
| 8 | ● | | ● | | ● | | ● | ● | | ● | | | | ● | ● | ● | | | | | | ● | ● | | ● | ● | ● | ● | ● | ● | ● | ● | ● | ● | | | ● | ● | | | | | | | ● | ● | | | | | | | | | | | ● | ● | | ● | | |
| 9 | ● | | ● | | ● | | ● | ● | | ● | | ● | | ● | ● | ● | | | | | | ● | ● | | ● | ● | ● | ● | ● | ● | ● | ● | ● | ● | | | ● | ● | | | | | | | ● | ● | | | | | | | | | | | ● | ● | | ● | | |
| 10 | ● | | ● | | ● | | ● | ● | | ● | ● | ● | | ● | ● | ● | | | | | | ● | ● | | ● | ● | ● | ● | ● | ● | ● | ● | ● | ● | | | ● | ● | | | | | | | ● | ● | | | | | | | | | | | ● | ● | | ● | | |
| 11 | ● | | ● | | ● | | | | ● | ● | | | | ● | ● | ● | | | | | | ● | ● | | ● | ● | ● | ● | ● | ● | ● | ● | ● | ● | | | ● | ● | | | | | | | ● | ● | | | | | | | | | | | ● | ● | | ● | | |
| 12 | ● | | ● | | ● | | | | ● | ● | ● | ● | | ● | ● | ● | | | | | | ● | ● | | ● | ● | ● | ● | ● | ● | ● | ● | ● | ● | | | ● | ● | | | | | | | ● | ● | | | | | | | | | | | ● | ● | | ● | | |
| 13 | ● | | ● | | ● | | ● | | ● | ● | ● | ● | | ● | ● | ● | | | | | | ● | ● | | ● | ● | ● | ● | ● | ● | ● | ● | ● | ● | | | ● | ● | | | | | | | ● | ● | | | | | | | | | | | ● | ● | | ● | | |
| 14 | ● | | ● | | ● | | | | ● | ● | | | ● | ● | ● | ● | | | | | | ● | ● | | ● | ● | ● | ● | ● | ● | ● | ● | ● | ● | | | ● | ● | | | | | | | ● | ● | | | | | | | | | | | ● | ● | | ● | | |
| 15 | ● | | ● | | ● | | | ● | ● | ● | | | ● | ● | ● | ● | | | | | | ● | ● | | ● | ● | ● | ● | ● | ● | ● | ● | ● | ● | | | ● | ● | | | | | | | ● | ● | | | | | | | | | | | ● | ● | | ● | | |
| 16 | ● | | ● | | ● | | | ● | ● | ● | | ● | ● | ● | ● | ● | | | | | | ● | ● | | ● | ● | ● | ● | ● | ● | ● | ● | ● | ● | | | ● | ● | | | | | | | ● | ● | | | | | | | | | | | ● | ● | | ● | | |
| ХП | ● | | ● | | ● | | ● | ● | ● | ● | ● | ● | ● | ● | ● | ● | | | | | | ● | ● | | ● | ● | ● | ● | ● | ● | ● | ● | ● | ● | | | ● | ● | | | | | | | ● | ● | | | | | | | | | | | ● | ● | | ● | | |

Упрощенная схема работы трех секционного сцепа на "СП" соединении тяговых двигателей ( 6 двигателей последовательно)

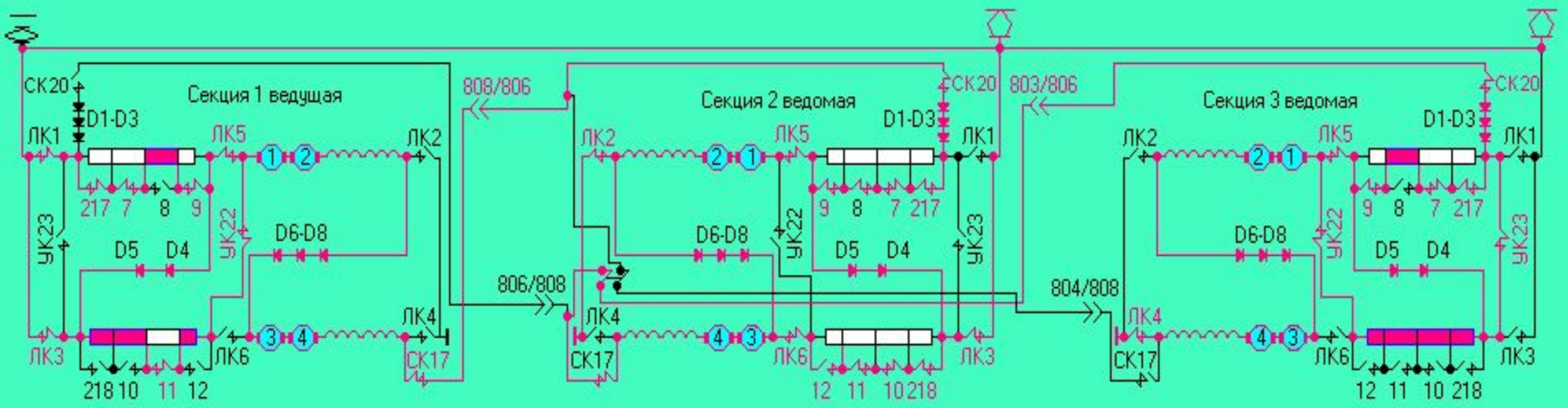


Порядок включения линейных (ЛК), реостатных (РК), уравнительных (УК) контакторов на "С" соединении трех секционного сцепа ( 6 тяговых двигателей последовательно)

| № | Линейные (ЛК) | | | | | | Реостатные (РК) | | | | | | | | | | | УК | | Линейные (ЛК) | | | | | | Реостатные (РК) | | | | | | | | | | | | УК | | Линейные (ЛК) | | | | | | Реостатные (РК) | | | | | | | | | | | УК | |
|---|---|---|---|---|---|---|---|---|---|---|---|---|---|---|---|---|---|---|---|---|---|---|---|---|---|---|---|---|---|---|---|---|---|---|---|---|---|---|---|---|---|---|---|---|---|---|---|---|---|---|---|---|---|---|---|---|---|---|
| Поз | 1 | 2 | 3 | 4 | 5 | 6 | 217 | 7 | 8 | 9 | 218 | 10 | 11 | 12 | 22 | 17 | 20 | 23 | 24 | 1 | 2 | 3 | 4 | 5 | 6 | 217 | 7 | 8 | 9 | 218 | 10 | 11 | 12 | 22 | 17 | 20 | 23 | 24 | 1 | 2 | 3 | 4 | 5 | 6 | 217 | 7 | 8 | 9 | 218 | 10 | 11 | 12 | 22 | 17 | 20 | 23 | 24 |
| 1 | ● | | ● | | ● | | | | | | | | | | ● | ● | | | | | ● | ● | | ● | ● | ● | ● | | ● | ● | ● | ● | | | ● | ● | | | | | | ● | ● | | | | | | | | | ● | | ● | ● | | |
| 2 | ● | | ● | | ● | | | | | | | | | | ● | ● | | | | | ● | ● | | ● | ● | ● | ● | ● | ● | ● | ● | ● | | | ● | ● | | | | | | ● | ● | | | | | | | | | ● | | ● | ● | | |
| 3 | ● | | ● | | ● | | | | | ● | | | | | ● | ● | | | | | ● | ● | | ● | ● | ● | ● | ● | ● | ● | ● | ● | | | ● | ● | | | | | | ● | ● | | | | ● | | | | | ● | | ● | ● | | |
| 4 | ● | | ● | | ● | | | | | ● | | | ● | | ● | ● | | | | | ● | ● | | ● | ● | ● | ● | ● | ● | ● | ● | ● | | | ● | ● | | | | | | ● | ● | | | | ● | | | | | ● | | ● | ● | | |
| 5 | ● | | ● | | ● | | | ● | | ● | | | ● | | ● | ● | | | | | ● | ● | | ● | ● | ● | ● | ● | ● | ● | ● | ● | | | ● | ● | | | | | | ● | ● | | | ● | ● | | | | | ● | | ● | ● | | |
| 6 | ● | | ● | | ● | | ● | ● | | ● | | | ● | | ● | ● | | | | | ● | ● | | ● | ● | ● | ● | ● | ● | ● | ● | ● | | | ● | ● | | | | | | ● | ● | | | ● | ● | | | | | ● | | ● | ● | | |
| 7 | ● | | ● | | ● | | ● | ● | | ● | | ● | ● | | ● | ● | | | | | ● | ● | | ● | ● | ● | ● | ● | ● | ● | ● | ● | | | ● | ● | | | | | | ● | ● | | | ● | ● | | ● | | ● | ● | | ● | ● | | |
| 8 | ● | | ● | | ● | | ● | ● | | ● | | | | ● | ● | ● | | | | | ● | ● | | ● | ● | ● | ● | ● | ● | ● | ● | ● | | | ● | ● | | | | | | ● | ● | | | ● | ● | | | | ● | ● | ● | ● | ● | | |
| 9 | ● | | ● | | ● | | ● | ● | | ● | | ● | | ● | ● | ● | | | | | ● | ● | | ● | ● | ● | ● | ● | ● | ● | ● | ● | | | ● | ● | | | | | | ● | ● | | | ● | ● | | ● | | ● | ● | ● | ● | ● | | |
| 10 | ● | | ● | | ● | | ● | ● | | ● | ● | ● | | ● | ● | ● | | | | | ● | ● | | ● | ● | ● | ● | ● | ● | ● | ● | ● | | | ● | ● | | | | | | ● | ● | | | ● | ● | | ● | ● | ● | ● | ● | ● | ● | | |
| 11 | ● | | ● | | ● | | | | ● | ● | | | | ● | ● | ● | | | | | ● | ● | | ● | ● | ● | ● | ● | ● | ● | ● | ● | | | ● | ● | | | | | | ● | ● | | | | | ● | ● | | ● | ● | ● | ● | ● | | |
| 12 | ● | | ● | | ● | | | | ● | ● | ● | ● | | ● | ● | ● | | | | | ● | ● | | ● | ● | ● | ● | ● | ● | ● | ● | ● | | | ● | ● | | | | | | ● | ● | | | | | ● | ● | ● | ● | ● | ● | ● | ● | | |
| 13 | ● | | ● | | ● | | ● | | ● | ● | ● | ● | | ● | ● | ● | | | | | ● | ● | | ● | ● | ● | ● | ● | ● | ● | ● | ● | | | ● | ● | | | | | | ● | ● | | | ● | | ● | ● | ● | ● | ● | ● | ● | ● | | |
| 14 | ● | | ● | | ● | | | | ● | ● | | | ● | ● | ● | ● | | | | | ● | ● | | ● | ● | ● | ● | ● | ● | ● | ● | ● | | | ● | ● | | | | | | ● | ● | | | | | ● | ● | ● | ● | ● | ● | ● | ● | | |
| 15 | ● | | ● | | ● | | | ● | ● | ● | | | ● | ● | ● | ● | | | | | ● | ● | | ● | ● | ● | ● | ● | ● | ● | ● | ● | | | ● | ● | | | | | | ● | ● | | | | ● | ● | ● | | | ● | ● | ● | ● | ● | | |
| 16 | ● | | ● | | ● | | | ● | ● | ● | | | ● | ● | ● | ● | | | | | ● | ● | | ● | ● | ● | ● | ● | ● | ● | ● | ● | | | ● | ● | | | | | | ● | ● | | | | ● | ● | ● | | ● | ● | ● | ● | ● | | |
| ХП | ● | | ● | | ● | | ● | ● | ● | ● | ● | ● | ● | ● | ● | ● | | | | | ● | ● | | ● | ● | ● | ● | ● | ● | ● | ● | ● | | | ● | ● | | | | | | ● | ● | | | ● | ● | ● | ● | ● | ● | ● | ● | ● | ● | | |

Упрощенная схема работы трех секционного сцепа на "СП" соединении тяговых двигателей ( 6 двигателей последовательно)

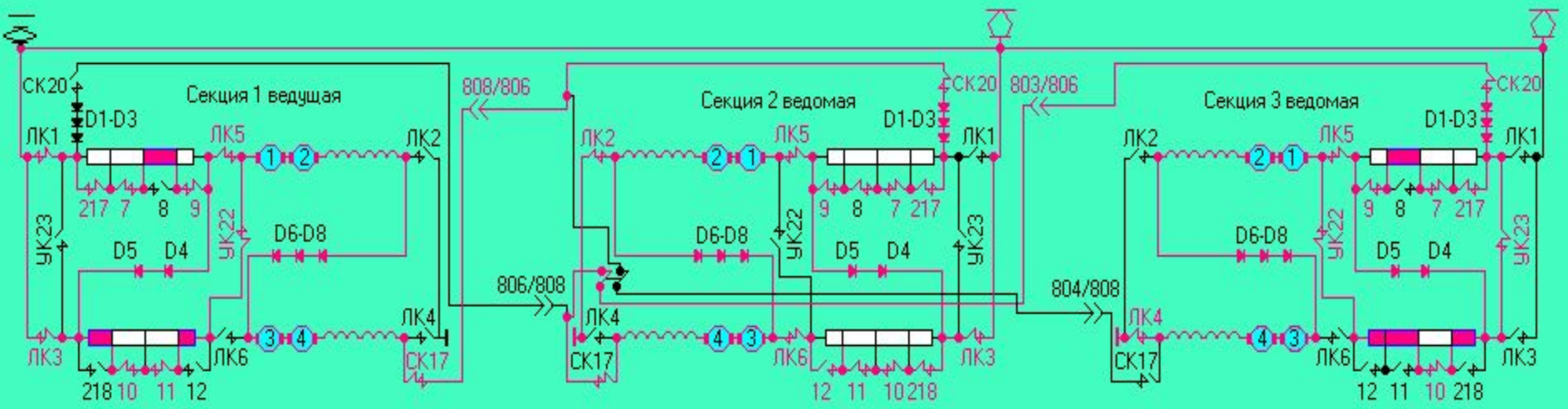


Порядок включения линейных (ЛК), реостатных (РК), уравнительных (УК) контакторов на "С" соединении трех секционного сцепа ( 6 тяговых двигателей последовательно)

| № | Линейные (ЛК) | | | | | | Реостатные (РК) | | | | | | | | | | УК | | Линейные (ЛК) | | | | | | Реостатные (РК) | | | | | | | | | | УК | | Линейные (ЛК) | | | | | | Реостатные (РК) | | | | | | | | | | УК | |
|---|---|---|---|---|---|---|---|---|---|---|---|---|---|---|---|---|---|---|---|---|---|---|---|---|---|---|---|---|---|---|---|---|---|---|---|---|---|---|---|---|---|---|---|---|---|---|---|---|---|---|---|---|---|---|
| Поз | 1 | 2 | 3 | 4 | 5 | 6 | 217 | 7 | 8 | 9 | 218 | 10 | 11 | 12 | 22 | 17 | 20 | 23 | 24 | 1 | 2 | 3 | 4 | 5 | 6 | 217 | 7 | 8 | 9 | 218 | 10 | 11 | 12 | 22 | 17 | 20 | 23 | 24 | 1 | 2 | 3 | 4 | 5 | 6 | 217 | 7 | 8 | 9 | 218 | 10 | 11 | 12 | 22 | 17 | 20 | 23 | 24 |
| 1 | ● | | ● | | ● | | | | | | | | | | ● | ● | | | | | ● | ● | | ● | ● | ● | ● | | ● | ● | ● | ● | | | ● | ● | | | | | | | ● | ● | | | | | | | | | ● | | ● | ● | | |
| 2 | ● | | ● | | ● | | | | | | | | | | ● | ● | | | | | ● | ● | | ● | ● | ● | ● | ● | ● | ● | ● | ● | | | ● | ● | | | | | | | ● | ● | | | | | | | | | ● | | ● | ● | | |
| 3 | ● | | ● | | ● | | | | | ● | | | | | ● | ● | | | | | ● | ● | | ● | ● | ● | ● | ● | ● | ● | ● | ● | | | ● | ● | | | | | | | ● | ● | | | | ● | | | | | ● | | ● | ● | | |
| 4 | ● | | ● | | ● | | | | | ● | | | ● | | ● | ● | | | | | ● | ● | | ● | ● | ● | ● | ● | ● | ● | ● | ● | | | ● | ● | | | | | | | ● | ● | | | | ● | | | | | ● | | ● | ● | | |
| 5 | ● | | ● | | ● | | | ● | | ● | | | ● | | ● | ● | | | | | ● | ● | | ● | ● | ● | ● | ● | ● | ● | ● | ● | | | ● | ● | | | | | | | ● | ● | | | ● | ● | | | | | ● | | ● | ● | | |
| 6 | ● | | ● | | ● | | ● | ● | | ● | | | ● | | ● | ● | | | | | ● | ● | | ● | ● | ● | ● | ● | ● | ● | ● | ● | | | ● | ● | | | | | | | ● | ● | | | ● | ● | | | | | ● | | ● | ● | | |
| 7 | ● | | ● | | ● | | ● | ● | | ● | | ● | ● | | ● | ● | | | | | ● | ● | | ● | ● | ● | ● | ● | ● | ● | ● | ● | | | ● | ● | | | | | | | ● | ● | | | ● | ● | | ● | | ● | ● | | ● | ● | | |
| 8 | ● | | ● | | ● | | ● | ● | | ● | | | | ● | ● | ● | | | | | ● | ● | | ● | ● | ● | ● | ● | ● | ● | ● | ● | | | ● | ● | | | | | | | ● | ● | | | ● | ● | | | ● | ● | ● | | ● | ● | | |
| 9 | ● | | ● | | ● | | ● | ● | | ● | | ● | | ● | ● | ● | | | | | ● | ● | | ● | ● | ● | ● | ● | ● | ● | ● | ● | | | ● | ● | | | | | | | ● | ● | | | ● | ● | | ● | | ● | ● | | ● | ● | | |
| 10 | ● | | ● | | ● | | ● | ● | | ● | ● | ● | | ● | ● | ● | | | | | ● | ● | | ● | ● | ● | ● | ● | ● | ● | ● | ● | | | ● | ● | | | | | | | ● | ● | | | ● | ● | ● | ● | ● | ● | ● | | ● | ● | | |
| 11 | ● | | ● | | ● | | | | ● | ● | | | | ● | ● | ● | | | | | ● | ● | | ● | ● | ● | ● | ● | ● | ● | ● | ● | | | ● | ● | | | | | | | ● | ● | | | | | ● | ● | ● | ● | ● | | ● | ● | | |
| 12 | ● | | ● | | ● | | | | ● | ● | ● | ● | | ● | ● | ● | | | | | ● | ● | | ● | ● | ● | ● | ● | ● | ● | ● | ● | | | ● | ● | | | | | | | ● | ● | | | | | ● | ● | ● | ● | ● | | ● | ● | | |
| 13 | ● | | ● | | ● | | ● | | ● | ● | ● | ● | | ● | ● | ● | | | | | ● | ● | | ● | ● | ● | ● | ● | ● | ● | ● | ● | | | ● | ● | | | | | | | ● | ● | | | ● | | ● | ● | ● | ● | | ● | ● | | |
| 14 | ● | | ● | | ● | | | | ● | ● | | | ● | ● | ● | ● | | | | | ● | ● | | ● | ● | ● | ● | ● | ● | ● | ● | ● | | | ● | ● | | | | | | | ● | ● | | | | | ● | ● | | | ● | ● | ● | ● | ● | |
| 15 | ● | | ● | | ● | | | ● | ● | ● | | | ● | ● | ● | ● | | | | | ● | ● | | ● | ● | ● | ● | ● | ● | ● | ● | ● | | | ● | ● | | | | | | | ● | ● | | | | ● | ● | ● | | | ● | ● | ● | ● | ● | |
| 16 | ● | | ● | | ● | | | ● | ● | ● | | | ● | ● | ● | ● | | | | | ● | ● | | ● | ● | ● | ● | ● | ● | ● | ● | ● | | | ● | ● | | | | | | | ● | ● | | | | ● | ● | ● | | ● | ● | ● | ● | ● | ● | |
| ХП | ● | | ● | | ● | | ● | ● | ● | ● | ● | ● | ● | ● | ● | ● | | | | | ● | ● | | ● | ● | ● | ● | ● | ● | ● | ● | ● | | | ● | ● | | | | | | | ● | ● | | | ● | ● | ● | ● | ● | ● | ● | ● | ● | ● | | |

Упрощенная схема работы трех секционного сцепа на "СП" соединении тяговых двигателей ( 6 двигателей последовательно)

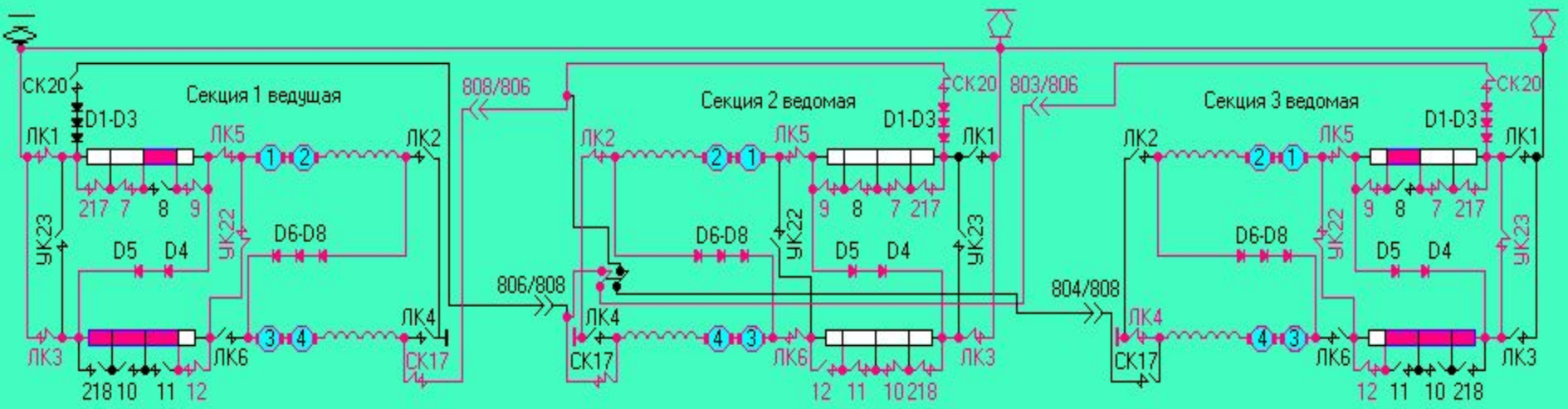


Порядок включения линейных (ЛК), реостатных (РК), уравнительных (УК) контакторов на "С" соединении трех секционного сцепа ( 6 тяговых двигателей последовательно)

| № | Линейные (ЛК) | | | | | | Реостатные (РК) | | | | | | | | | | УК | | Линейные (ЛК) | | | | | | Реостатные (РК) | | | | | | | | | | УК | | Линейные (ЛК) | | | | | | Реостатные (РК) | | | | | | | | | | УК | |
|---|---|---|---|---|---|---|---|---|---|---|---|---|---|---|---|---|---|---|---|---|---|---|---|---|---|---|---|---|---|---|---|---|---|---|---|---|---|---|---|---|---|---|---|---|---|---|---|---|---|---|---|---|---|---|
| Поз | 1 | 2 | 3 | 4 | 5 | 6 | 217 | 7 | 8 | 9 | 218 | 10 | 11 | 12 | 22 | 17 | 20 | 23 | 24 | 1 | 2 | 3 | 4 | 5 | 6 | 217 | 7 | 8 | 9 | 218 | 10 | 11 | 12 | 22 | 17 | 20 | 23 | 24 | 1 | 2 | 3 | 4 | 5 | 6 | 217 | 7 | 8 | 9 | 218 | 10 | 11 | 12 | 22 | 17 | 20 | 23 | 24 |
| 1 | ● | | ● | | ● | | | | | | | | | | ● | ● | | | | | ● | ● | | ● | ● | ● | ● | | ● | ● | ● | ● | | | ● | ● | | | | | | | ● | ● | | | | | | | | | ● | | ● | ● | | |
| 2 | ● | | ● | | ● | | | | | | | | | | ● | ● | | | | | ● | ● | | ● | ● | ● | ● | ● | ● | ● | ● | ● | | | ● | ● | | | | | | | ● | ● | | | | | | | | | ● | | ● | ● | | |
| 3 | ● | | ● | | ● | | | | | ● | | | | | ● | ● | | | | | ● | ● | | ● | ● | ● | ● | ● | ● | ● | ● | ● | | | ● | ● | | | | | | | ● | ● | | | | ● | | | | | ● | | ● | ● | | |
| 4 | ● | | ● | | ● | | | | | ● | | | ● | | ● | ● | | | | | ● | ● | | ● | ● | ● | ● | ● | ● | ● | ● | ● | | | ● | ● | | | | | | | ● | ● | | | | ● | | | | | ● | | ● | ● | | |
| 5 | ● | | ● | | ● | | | ● | | ● | | | ● | | ● | ● | | | | | ● | ● | | ● | ● | ● | ● | ● | ● | ● | ● | ● | | | ● | ● | | | | | | | ● | ● | | | ● | ● | | | | | ● | | ● | ● | | |
| 6 | ● | | ● | | ● | | ● | ● | | ● | | | ● | | ● | ● | | | | | ● | ● | | ● | ● | ● | ● | ● | ● | ● | ● | ● | | | ● | ● | | | | | | | ● | ● | | | ● | ● | | | | | ● | | ● | ● | | |
| 7 | ● | | ● | | ● | | ● | ● | | ● | | ● | ● | | ● | ● | | | | | ● | ● | | ● | ● | ● | ● | ● | ● | ● | ● | ● | | | ● | ● | | | | | | | ● | ● | | | ● | ● | | ● | | ● | ● | | ● | ● | | |
| 8 | ● | | ● | | ● | | ● | ● | | ● | | | | ● | ● | ● | | | | | ● | ● | | ● | ● | ● | ● | ● | ● | ● | ● | ● | | | ● | ● | | | | | | | ● | ● | | | ● | ● | | | ● | ● | ● | | ● | ● | | |
| 9 | ● | | ● | | ● | | ● | ● | | ● | | ● | | ● | ● | ● | | | | | ● | ● | | ● | ● | ● | ● | ● | ● | ● | ● | ● | | | ● | ● | | | | | | | ● | ● | | | ● | ● | | ● | | ● | ● | | ● | ● | | |
| 10 | ● | | ● | | ● | | ● | ● | | ● | ● | ● | | ● | ● | ● | | | | | ● | ● | | ● | ● | ● | ● | ● | ● | ● | ● | ● | | | ● | ● | | | | | | | ● | ● | | | ● | ● | ● | ● | ● | ● | ● | | ● | ● | | |
| 11 | ● | | ● | | ● | | | | ● | ● | | | | ● | ● | ● | | | | | ● | ● | | ● | ● | ● | ● | ● | ● | ● | ● | ● | | | ● | ● | | | | | | | ● | ● | | | | | ● | ● | ● | ● | ● | | ● | ● | | |
| 12 | ● | | ● | | ● | | | | ● | ● | ● | ● | | ● | ● | ● | | | | | ● | ● | | ● | ● | ● | ● | ● | ● | ● | ● | ● | | | ● | ● | | | | | | | ● | ● | | | | | ● | ● | ● | ● | ● | | ● | ● | | |
| 13 | ● | | ● | | ● | | ● | | ● | ● | ● | ● | | ● | ● | ● | | | | | ● | ● | | ● | ● | ● | ● | ● | ● | ● | ● | ● | | | ● | ● | | | | | | | ● | ● | | | ● | | ● | ● | ● | ● | ● | | ● | ● | | |
| 14 | ● | | ● | | ● | | | | ● | ● | | | ● | ● | ● | ● | | | | | ● | ● | | ● | ● | ● | ● | ● | ● | ● | ● | ● | | | ● | ● | | | | | | | ● | ● | | | | | ● | ● | ● | ● | ● | | ● | ● | | |
| 15 | ● | | ● | | ● | | | ● | ● | ● | | | ● | ● | ● | ● | | | | | ● | ● | | ● | ● | ● | ● | ● | ● | ● | ● | ● | | | ● | ● | | | | | | | ● | ● | | | | ● | ● | ● | | | ● | ● | ● | ● | ● | | |
| 16 | ● | | ● | | ● | | | ● | ● | ● | | ● | ● | ● | ● | ● | | | | | ● | ● | | ● | ● | ● | ● | ● | ● | ● | ● | ● | | | ● | ● | | | | | | | ● | ● | | | | ● | ● | ● | | ● | ● | ● | ● | ● | | |
| ХП | ● | | ● | | ● | | ● | ● | ● | ● | ● | ● | ● | ● | ● | ● | | | | | ● | ● | | ● | ● | ● | ● | ● | ● | ● | ● | ● | | | ● | ● | | | | | | | ● | ● | | | ● | ● | ● | ● | ● | ● | ● | ● | ● | ● | | |

Упрощенная схема работы трех секционного сцепа на "СП" соединении тяговых двигателей ( 6 двигателей последовательно)

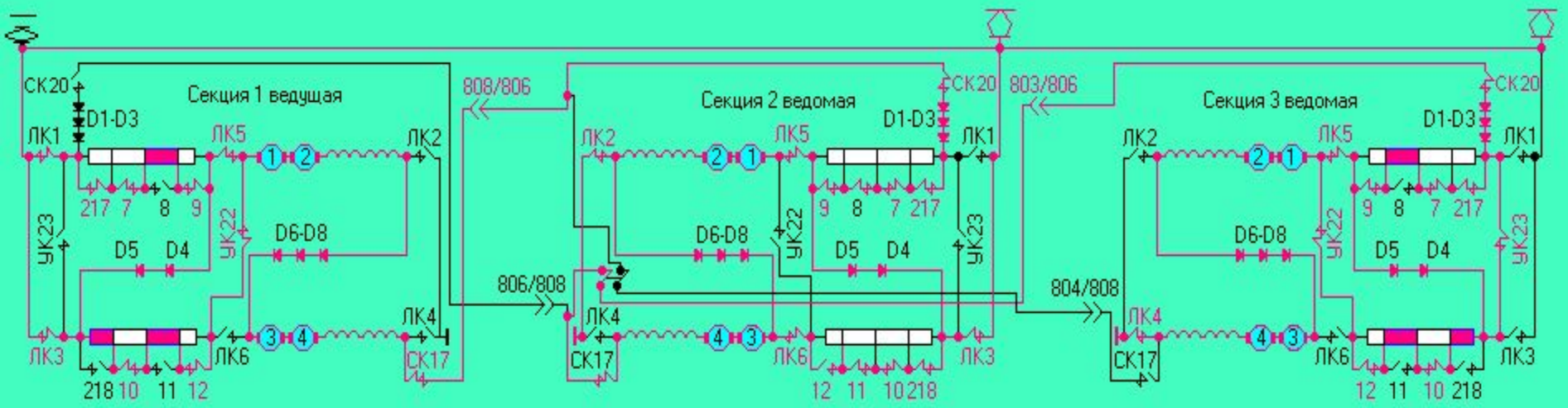


Порядок включения линейных (ЛК), реостатных (РК), уравнительных (УК) контакторов на "С" соединении трех секционного сцепа ( 6 тяговых двигателей последовательно)

| № | Линейные (ЛК) | | | | | | Реостатные (РК) | | | | | | | | | | УК | | Линейные (ЛК) | | | | | | Реостатные (РК) | | | | | | | | | | | УК | | Линейные (ЛК) | | | | | | Реостатные (РК) | | | | | | | | | | УК | |
|---|---|---|---|---|---|---|---|---|---|---|---|---|---|---|---|---|---|---|---|---|---|---|---|---|---|---|---|---|---|---|---|---|---|---|---|---|---|---|---|---|---|---|---|---|---|---|---|---|---|---|---|---|---|---|
| Поз | 1 | 2 | 3 | 4 | 5 | 6 | 217 | 7 | 8 | 9 | 218 | 10 | 11 | 12 | 22 | 17 | 20 | 23 | 24 | 1 | 2 | 3 | 4 | 5 | 6 | 217 | 7 | 8 | 9 | 218 | 10 | 11 | 12 | 22 | 17 | 20 | 23 | 24 | 1 | 2 | 3 | 4 | 5 | 6 | 217 | 7 | 8 | 9 | 218 | 10 | 11 | 12 | 22 | 17 | 20 | 23 | 24 |
| 1 | ● | | ● | | ● | | | | | | | | | | ● | ● | | | | | ● | ● | | ● | ● | ● | ● | | ● | ● | ● | ● | | | ● | ● | | | | | | ● | ● | | | | | | | | | | | | | | | |
| 2 | ● | | ● | | ● | | | | | | | | | | ● | ● | | | | | ● | ● | | ● | ● | ● | ● | ● | ● | ● | ● | ● | | | ● | ● | | | | | | ● | ● | | | | | | | | | | | | | | | |
| 3 | ● | | ● | | ● | | | | | ● | | | | | ● | ● | | | | | ● | ● | | ● | ● | ● | ● | ● | ● | ● | ● | ● | | | ● | ● | | | | | | ● | ● | | | | ● | | | | | | | | | | | |
| 4 | ● | | ● | | ● | | | | | ● | | | ● | | ● | ● | | | | | ● | ● | | ● | ● | ● | ● | ● | ● | ● | ● | ● | | | ● | ● | | | | | | ● | ● | | | | ● | | | | | | | | | | | |
| 5 | ● | | ● | | ● | | | ● | | ● | | | ● | | ● | ● | | | | | ● | ● | | ● | ● | ● | ● | ● | ● | ● | ● | ● | | | ● | ● | | | | | | ● | ● | | | ● | ● | | | | | | | | | | | |
| 6 | ● | | ● | | ● | | ● | ● | | ● | | | ● | | ● | ● | | | | | ● | ● | | ● | ● | ● | ● | ● | ● | ● | ● | ● | | | ● | ● | | | | | | ● | ● | | ● | ● | ● | | | | | | | | | | | |
| 7 | ● | | ● | | ● | | ● | ● | | ● | | ● | ● | | ● | ● | | | | | ● | ● | | ● | ● | ● | ● | ● | ● | ● | ● | ● | | | ● | ● | | | | | | ● | ● | | ● | ● | ● | | ● | | | | | | | | | |
| 8 | ● | | ● | | ● | | ● | ● | | ● | | | | ● | ● | ● | | | | | ● | ● | | ● | ● | ● | ● | ● | ● | ● | ● | ● | | | ● | ● | | | | | | ● | ● | | ● | ● | ● | | | | ● | ● | | | ● | ● | |
| 9 | ● | | ● | | ● | | ● | ● | | ● | | ● | | ● | ● | ● | | | | | ● | ● | | ● | ● | ● | ● | ● | ● | ● | ● | ● | | | ● | ● | | | | | | ● | ● | | ● | ● | ● | | ● | | ● | | ● | ● | | ● | ● | |
| 10 | ● | | ● | | ● | | ● | ● | | ● | ● | ● | | ● | ● | ● | | | | | ● | ● | | ● | ● | ● | ● | ● | ● | ● | ● | ● | | | ● | ● | | | | | | ● | ● | | ● | ● | ● | | ● | ● | ● | | ● | ● | | ● | ● | |
| 11 | ● | | ● | | ● | | | | ● | ● | | | | ● | ● | ● | | | | | ● | ● | | ● | ● | ● | ● | ● | ● | ● | ● | ● | | | ● | ● | | | | | | ● | ● | | | | | ● | ● | | ● | ● | ● | | ● | ● | |
| 12 | ● | | ● | | ● | | | | ● | ● | ● | ● | | ● | ● | ● | | | | | ● | ● | | ● | ● | ● | ● | ● | ● | ● | ● | ● | | | ● | ● | | | | | | ● | ● | | | | ● | ● | ● | ● | ● | ● | ● | ● | ● | ● | |
| 13 | ● | | ● | | ● | | ● | | ● | ● | ● | ● | | ● | ● | ● | | | | | ● | ● | | ● | ● | ● | ● | ● | ● | ● | ● | ● | | | ● | ● | | | | | | ● | ● | | ● | | ● | ● | ● | ● | ● | ● | ● | ● | ● | ● | |
| 14 | ● | | ● | | ● | | | | ● | ● | | | ● | ● | ● | ● | | | | | ● | ● | | ● | ● | ● | ● | ● | ● | ● | ● | ● | | | ● | ● | | | | | | ● | ● | | | | ● | ● | | | ● | ● | ● | ● | ● | ● | |
| 15 | ● | | ● | | ● | | | ● | ● | ● | | | ● | ● | ● | ● | | | | | ● | ● | | ● | ● | ● | ● | ● | ● | ● | ● | ● | | | ● | ● | | | | | | ● | ● | | | ● | ● | ● | | | ● | ● | ● | ● | ● | ● | |
| 16 | ● | | ● | | ● | | | ● | ● | ● | | ● | ● | ● | ● | ● | | | | | ● | ● | | ● | ● | ● | ● | ● | ● | ● | ● | ● | | | ● | ● | | | | | | ● | ● | | | ● | ● | ● | | ● | ● | ● | ● | ● | ● | |
| ХП | ● | | ● | | ● | | ● | ● | ● | ● | ● | ● | ● | ● | ● | ● | | | | | ● | ● | | ● | ● | ● | ● | ● | ● | ● | ● | ● | | | ● | ● | | | | | | ● | ● | | ● | ● | ● | ● | ● | ● | ● | ● | ● | ● | ● | |

Упрощенная схема работы трех секционного сцепа на "СП" соединении тяговых двигателей ( 6 двигателей последовательно)

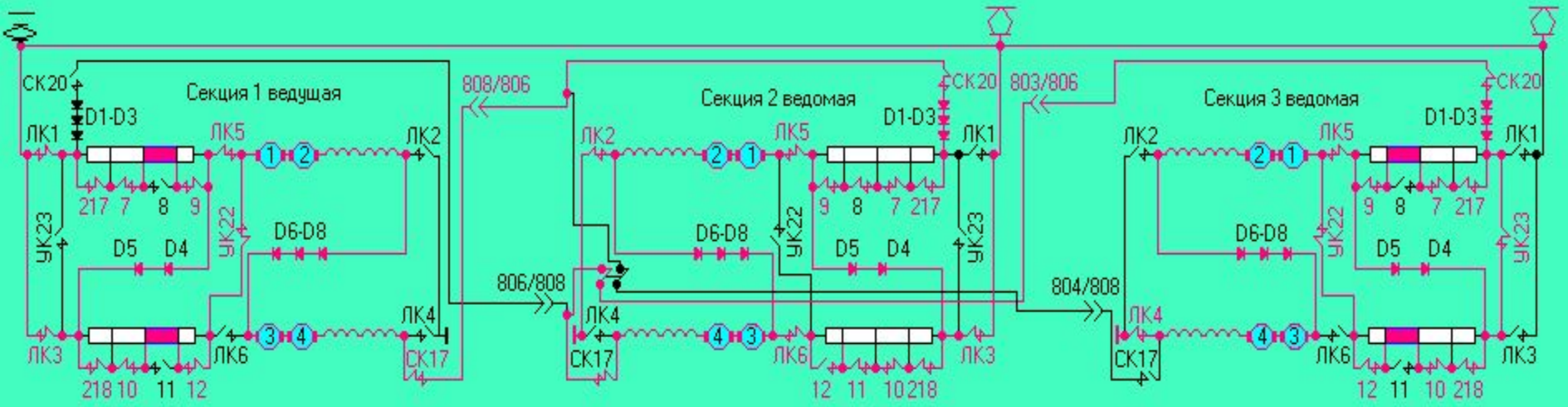


Порядок включения линейных (ЛК), реостатных (РК), уравнительных (УК) контакторов на "С" соединении трех секционного сцепа ( 6 тяговых двигателей последовательно)

| № | Линейные (ЛК) | | | | | | Реостатные (РК) | | | | | | | | | | УК | | Линейные (ЛК) | | | | | | Реостатные (РК) | | | | | | | | | | УК | | Линейные (ЛК) | | | | | | Реостатные (РК) | | | | | | | | | | УК | |
|---|---|---|---|---|---|---|---|---|---|---|---|---|---|---|---|---|---|---|---|---|---|---|---|---|---|---|---|---|---|---|---|---|---|---|---|---|---|---|---|---|---|---|---|---|---|---|---|---|---|---|---|---|---|---|
| Поз | 1 | 2 | 3 | 4 | 5 | 6 | 217 | 7 | 8 | 9 | 218 | 10 | 11 | 12 | 22 | 17 | 20 | 23 | 24 | 1 | 2 | 3 | 4 | 5 | 6 | 217 | 7 | 8 | 9 | 218 | 10 | 11 | 12 | 22 | 17 | 20 | 23 | 24 | 1 | 2 | 3 | 4 | 5 | 6 | 217 | 7 | 8 | 9 | 218 | 10 | 11 | 12 | 22 | 17 | 20 | 23 | 24 |
| 1 | ● | | ● | | ● | | | | | | | | | | ● | ● | | | | | ● | ● | | ● | ● | ● | ● | | ● | ● | ● | ● | | | ● | ● | | | | | | | ● | ● | | | | | | | ● | | ● | ● | | |
| 2 | ● | | ● | | ● | | | | | | | | | | ● | ● | | | | | ● | ● | | ● | ● | ● | ● | ● | ● | ● | ● | ● | | | ● | ● | | | | | | | ● | ● | | | | | | | ● | | ● | ● | | |
| 3 | ● | | ● | | ● | | | | | ● | | | | | ● | ● | | | | | ● | ● | | ● | ● | ● | ● | ● | ● | ● | ● | ● | | | ● | ● | | | | | | | ● | ● | | | ● | | | | ● | | ● | ● | | |
| 4 | ● | | ● | | ● | | | | | ● | | | ● | | ● | ● | | | | | ● | ● | | ● | ● | ● | ● | ● | ● | ● | ● | ● | | | ● | ● | | | | | | | ● | ● | | | ● | | | | ● | | ● | ● | | |
| 5 | ● | | ● | | ● | | | ● | | ● | | | ● | | ● | ● | | | | | ● | ● | | ● | ● | ● | ● | ● | ● | ● | ● | ● | | | ● | ● | | | | | | | ● | ● | | ● | | | | | ● | | ● | ● | | |
| 6 | ● | | ● | | ● | | ● | ● | | ● | | | ● | | ● | ● | | | | | ● | ● | | ● | ● | ● | ● | ● | ● | ● | ● | ● | | | ● | ● | | | | | | | ● | ● | | ● | | | | | ● | | ● | ● | | |
| 7 | ● | | ● | | ● | | ● | ● | | ● | | ● | ● | | ● | ● | | | | | ● | ● | | ● | ● | ● | ● | ● | ● | ● | ● | ● | | | ● | ● | | | | | | | ● | ● | ● | ● | | | ● | | ● | | ● | ● | | |
| 8 | ● | | ● | | ● | | ● | ● | | ● | | | | ● | ● | ● | | | | | ● | ● | | ● | ● | ● | ● | ● | ● | ● | ● | ● | | | ● | ● | | | | | | | ● | ● | ● | ● | | | | ● | ● | | ● | ● | | |
| 9 | ● | | ● | | ● | | ● | ● | | ● | | ● | | ● | ● | ● | | | | | ● | ● | | ● | ● | ● | ● | ● | ● | ● | ● | ● | | | ● | ● | | | | | | | ● | ● | ● | ● | | ● | | ● | ● | | ● | ● | | |
| 10 | ● | | ● | | ● | | ● | ● | | ● | ● | ● | | ● | ● | ● | | | | | ● | ● | | ● | ● | ● | ● | ● | ● | ● | ● | ● | | | ● | ● | | | | | | | ● | ● | | ● | ● | ● | | ● | ● | | ● | ● | | |
| 11 | ● | | ● | | ● | | | | ● | ● | | | | ● | ● | ● | | | | | ● | ● | | ● | ● | ● | ● | ● | ● | ● | ● | ● | | | ● | ● | | | | | | | ● | ● | | | | ● | ● | | ● | ● | | ● | ● | | |
| 12 | ● | | ● | | ● | | | | ● | ● | ● | ● | | ● | ● | ● | | | | | ● | ● | | ● | ● | ● | ● | ● | ● | ● | ● | ● | | | ● | ● | | | | | | | ● | ● | | | | ● | ● | ● | ● | ● | ● | ● | ● | | |
| 13 | ● | | ● | | ● | | ● | | ● | ● | ● | ● | | ● | ● | ● | | | | | ● | ● | | ● | ● | ● | ● | ● | ● | ● | ● | ● | | | ● | ● | | | | | | | ● | ● | | ● | ● | ● | ● | | ● | ● | | ● | ● | | |
| 14 | ● | | ● | | ● | | | | ● | ● | | | ● | ● | ● | ● | | | | | ● | ● | | ● | ● | ● | ● | ● | ● | ● | ● | ● | | | ● | ● | | | | | | | ● | ● | | | | ● | ● | | ● | ● | ● | ● | ● | | |
| 15 | ● | | ● | | ● | | | ● | ● | ● | | | ● | ● | ● | ● | | | | | ● | ● | | ● | ● | ● | ● | ● | ● | ● | ● | ● | | | ● | ● | | | | | | | ● | ● | | | ● | ● | ● | | ● | ● | ● | ● | ● | | |
| 16 | ● | | ● | | ● | | | ● | ● | ● | | ● | ● | ● | ● | ● | | | | | ● | ● | | ● | ● | ● | ● | ● | ● | ● | ● | ● | | | ● | ● | | | | | | | ● | ● | | | ● | ● | ● | | ● | ● | ● | ● | ● | | |
| ХП | ● | | ● | | ● | | ● | ● | ● | ● | ● | ● | ● | ● | ● | ● | | | | | ● | ● | | ● | ● | ● | ● | ● | ● | ● | ● | ● | | | ● | ● | | | | | | | ● | ● | | | | ● | ● | ● | ● | ● | ● | ● | ● | | |

Упрощенная схема работы трех секционного сцепа на "СП" соединении тяговых двигателей ( 6 двигателей последовательно)

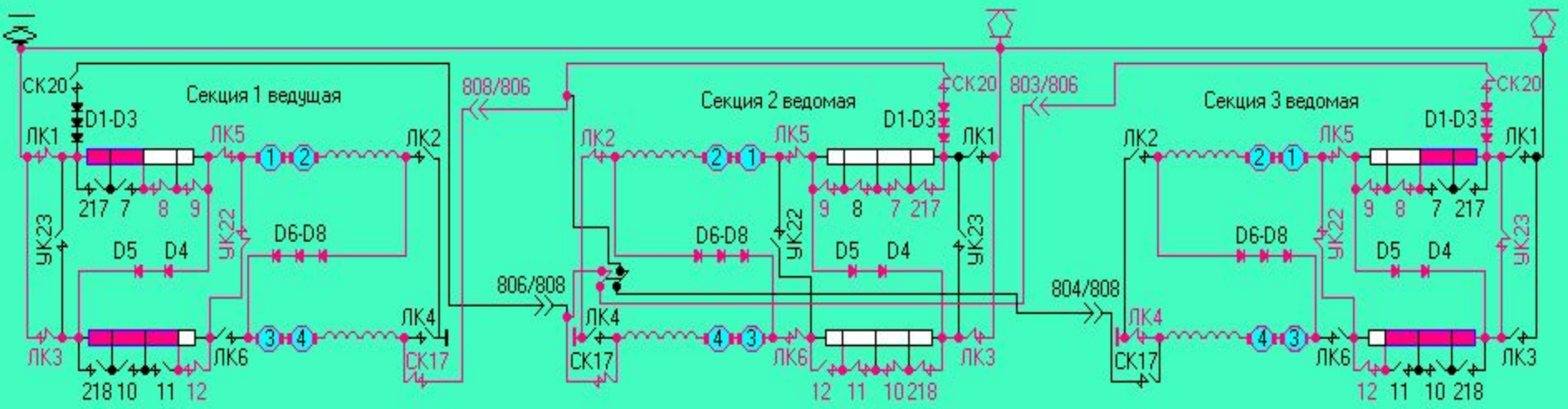


Порядок включения линейных (ЛК), реостатных (РК), уравнительных (УК) контакторов на "С" соединении трех секционного сцепа ( 6 тяговых двигателей последовательно)

| № | Линейные (ЛК) | | | | | | Реостатные (РК) | | | | | | | | | | УК | | Линейные (ЛК) | | | | | | Реостатные (РК) | | | | | | | | | | УК | | Линейные (ЛК) | | | | | | Реостатные (РК) | | | | | | | | | | УК | |
|---|---|---|---|---|---|---|---|---|---|---|---|---|---|---|---|---|---|---|---|---|---|---|---|---|---|---|---|---|---|---|---|---|---|---|---|---|---|---|---|---|---|---|---|---|---|---|---|---|---|---|---|---|---|---|
| Поз | 1 | 2 | 3 | 4 | 5 | 6 | 217 | 7 | 8 | 9 | 218 | 10 | 11 | 12 | 22 | 17 | 20 | 23 | 24 | 1 | 2 | 3 | 4 | 5 | 6 | 217 | 7 | 8 | 9 | 218 | 10 | 11 | 12 | 22 | 17 | 20 | 23 | 24 | 1 | 2 | 3 | 4 | 5 | 6 | 217 | 7 | 8 | 9 | 218 | 10 | 11 | 12 | 22 | 17 | 20 | 23 | 24 |
| 1 | ● | | ● | | ● | | | | | | | | | | ● | ● | | | | | ● | ● | | ● | ● | ● | ● | | ● | ● | ● | ● | | | ● | ● | | | | | ● | ● | | | | | | | | | | | ● | | ● | ● | | |
| 2 | ● | | ● | | ● | | | | | | | | | | ● | ● | | | | | ● | ● | | ● | ● | ● | ● | ● | ● | ● | ● | ● | | | ● | ● | | | | | ● | ● | | | | | | | | | | | ● | | ● | ● | | |
| 3 | ● | | ● | | ● | | | | | ● | | | | | ● | ● | | | | | ● | ● | | ● | ● | ● | ● | ● | ● | ● | ● | ● | | | ● | ● | | | | | ● | ● | | | | | ● | | | | | | ● | | ● | ● | | |
| 4 | ● | | ● | | ● | | | | | ● | | | ● | | ● | ● | | | | | ● | ● | | ● | ● | ● | ● | ● | ● | ● | ● | ● | | | ● | ● | | | | | ● | ● | | | | | ● | | | | | | ● | | ● | ● | | |
| 5 | ● | | ● | | ● | | | ● | | ● | | | ● | | ● | ● | | | | | ● | ● | | ● | ● | ● | ● | ● | ● | ● | ● | ● | | | ● | ● | | | | | ● | ● | | | | | ● | | | | | | ● | | ● | ● | | |
| 6 | ● | | ● | | ● | | ● | ● | | ● | | | ● | | ● | ● | | | | | ● | ● | | ● | ● | ● | ● | ● | ● | ● | ● | ● | | | ● | ● | | | | | ● | ● | | | | | ● | | | | | | ● | | ● | ● | | |
| 7 | ● | | ● | | ● | | ● | ● | | ● | | ● | ● | | ● | ● | | | | | ● | ● | | ● | ● | ● | ● | ● | ● | ● | ● | ● | | | ● | ● | | | | | ● | ● | | | | | ● | | | ● | | | ● | | ● | ● | | |
| 8 | ● | | ● | | ● | | ● | ● | | ● | | | | ● | ● | ● | | | | | ● | ● | | ● | ● | ● | ● | ● | ● | ● | ● | ● | | | ● | ● | | | | | ● | ● | | | | | ● | | | | ● | ● | ● | | ● | ● | | |
| 9 | ● | | ● | | ● | | ● | ● | | ● | | ● | | ● | ● | ● | | | | | ● | ● | | ● | ● | ● | ● | ● | ● | ● | ● | ● | | | ● | ● | | | | | ● | ● | | | | | ● | | | ● | | | ● | ● | ● | ● | | |
| 10 | ● | | ● | | ● | | ● | ● | | ● | ● | ● | | ● | ● | ● | | | | | ● | ● | | ● | ● | ● | ● | ● | ● | ● | ● | ● | | | ● | ● | | | | | ● | ● | | | | | ● | | ● | ● | ● | ● | ● | ● | ● | ● | | |
| 11 | ● | | ● | | ● | | | | ● | ● | | | | ● | ● | ● | | | | | ● | ● | | ● | ● | ● | ● | ● | ● | ● | ● | ● | | | ● | ● | | | | | ● | ● | | | | | ● | | | | ● | ● | | | ● | ● | | |
| 12 | ● | | ● | | ● | | | | ● | ● | ● | ● | | ● | ● | ● | | | | | ● | ● | | ● | ● | ● | ● | ● | ● | ● | ● | ● | | | ● | ● | | | | | ● | ● | | | | | ● | | | ● | ● | ● | ● | | ● | ● | | |
| 13 | ● | | ● | | ● | | ● | | ● | ● | ● | ● | | ● | ● | ● | | | | | ● | ● | | ● | ● | ● | ● | ● | ● | ● | ● | ● | | | ● | ● | | | | | ● | ● | | | | | ● | | | ● | ● | ● | ● | | ● | ● | | |
| 14 | ● | | ● | | ● | | | | ● | ● | | | ● | ● | ● | ● | | | | | ● | ● | | ● | ● | ● | ● | ● | ● | ● | ● | ● | | | ● | ● | | | | | ● | ● | | | | | ● | | | | ● | ● | ● | | ● | ● | | |
| 15 | ● | | ● | | ● | | | ● | ● | ● | | | ● | ● | ● | ● | | | | | ● | ● | | ● | ● | ● | ● | ● | ● | ● | ● | ● | | | ● | ● | | | | | ● | ● | | | | | ● | | | ● | ● | ● | | | ● | ● | | |
| 16 | ● | | ● | | ● | | | ● | ● | ● | | | ● | ● | ● | ● | | | | | ● | ● | | ● | ● | ● | ● | ● | ● | ● | ● | ● | | | ● | ● | | | | | ● | ● | | | | | ● | | | ● | ● | ● | | | ● | ● | | |
| ХП | ● | | ● | | ● | | ● | ● | ● | ● | ● | ● | ● | ● | ● | ● | | | | | ● | ● | | ● | ● | ● | ● | ● | ● | ● | ● | ● | | | ● | ● | | | | | ● | ● | | | | | ● | | | ● | ● | ● | ● | | ● | ● | | |

Упрощенная схема работы трех секционного сцепа на "СП" соединении тяговых двигателей ( 6 двигателей последовательно)

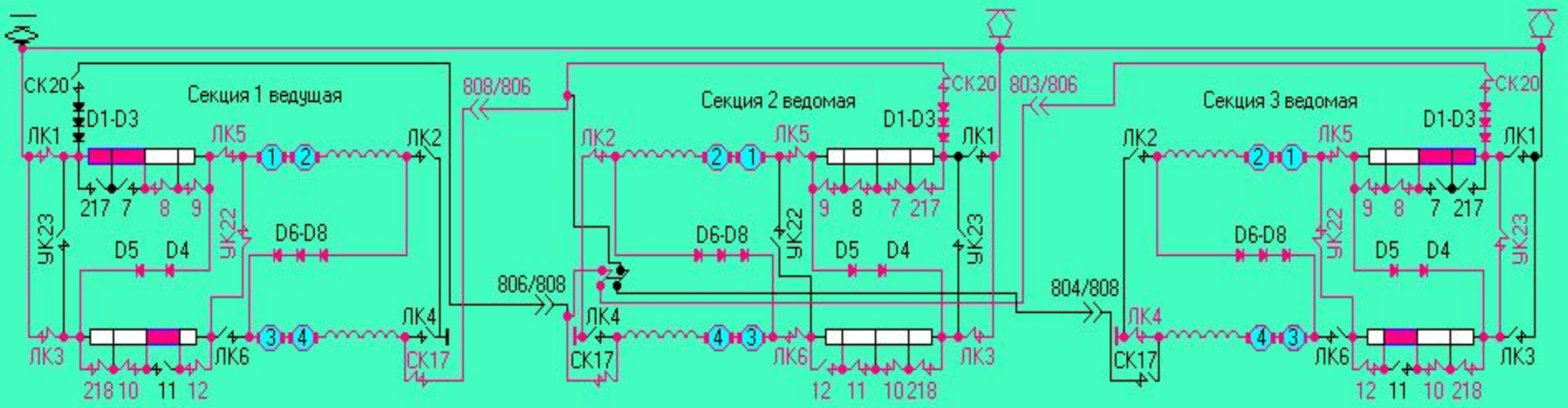


Порядок включения линейных (ЛК), реостатных (РК), уравнительных (УК) контакторов на "С" соединении трех секционного сцепа ( 6 тяговых двигателей последовательно)

| № | Линейные (ЛК) | | | | | | Реостатные (РК) | | | | | | | | | | | УК | | Линейные (ЛК) | | | | | | Реостатные (РК) | | | | | | | | | | | | УК | | Линейные (ЛК) | | | | | | Реостатные (РК) | | | | | | | | | | | УК | |
|---|---|---|---|---|---|---|---|---|---|---|---|---|---|---|---|---|---|---|---|---|---|---|---|---|---|---|---|---|---|---|---|---|---|---|---|---|---|---|---|---|---|---|---|---|---|---|---|---|---|---|---|---|---|---|---|---|---|---|
| Поз | 1 | 2 | 3 | 4 | 5 | 6 | 217 | 7 | 8 | 9 | 218 | 10 | 11 | 12 | 22 | 17 | 20 | 23 | 24 | 1 | 2 | 3 | 4 | 5 | 6 | 217 | 7 | 8 | 9 | 218 | 10 | 11 | 12 | 22 | 17 | 20 | 23 | 24 | 1 | 2 | 3 | 4 | 5 | 6 | 217 | 7 | 8 | 9 | 218 | 10 | 11 | 12 | 22 | 17 | 20 | 23 | 24 |
| 1 | ● | | ● | | ● | | | | | | | | | | ● | ● | | | | | ● | ● | | ● | ● | ● | ● | | ● | ● | ● | ● | | | ● | ● | | | | | | ● | ● | | | | | | | | | | | | | | | |
| 2 | ● | | ● | | ● | | | | | | | | | | ● | ● | | | | | ● | ● | | ● | ● | ● | ● | ● | ● | ● | ● | ● | | | ● | ● | | | | | | ● | ● | | | | | | | | | | | | | | | |
| 3 | ● | | ● | | ● | | | | | ● | | | | | ● | ● | | | | | ● | ● | | ● | ● | ● | ● | ● | ● | ● | ● | ● | | | ● | ● | | | | | | ● | ● | | | | ● | | | | | | | | | | | |
| 4 | ● | | ● | | ● | | | | | ● | | | ● | | ● | ● | | | | | ● | ● | | ● | ● | ● | ● | ● | ● | ● | ● | ● | | | ● | ● | | | | | | ● | ● | | | | ● | | | | | | | | | | | |
| 5 | ● | | ● | | ● | | | ● | | ● | | | ● | | ● | ● | | | | | ● | ● | | ● | ● | ● | ● | ● | ● | ● | ● | ● | | | ● | ● | | | | | | ● | ● | | | ● | ● | | | | | | | | | | | |
| 6 | ● | | ● | | ● | | ● | ● | | ● | | | ● | | ● | ● | | | | | ● | ● | | ● | ● | ● | ● | ● | ● | ● | ● | ● | | | ● | ● | | | | | | ● | ● | | ● | ● | ● | | | | | | | | | | | |
| 7 | ● | | ● | | ● | | ● | ● | | ● | | ● | ● | | ● | ● | | | | | ● | ● | | ● | ● | ● | ● | ● | ● | ● | ● | ● | | | ● | ● | | | | | | ● | ● | | ● | ● | ● | | ● | | | | | | | | | |
| 8 | ● | | ● | | ● | | ● | ● | | ● | | | | ● | ● | ● | | | | | ● | ● | | ● | ● | ● | ● | ● | ● | ● | ● | ● | | | ● | ● | | | | | | ● | ● | | ● | ● | ● | | | ● | ● | | | | | | | |
| 9 | ● | | ● | | ● | | ● | ● | | ● | | ● | | ● | ● | ● | | | | | ● | ● | | ● | ● | ● | ● | ● | ● | ● | ● | ● | | | ● | ● | | | | | | ● | ● | | ● | ● | ● | | ● | ● | ● | | | | | | |
| 10 | ● | | ● | | ● | | ● | ● | | ● | ● | ● | | ● | ● | ● | | | | | ● | ● | | ● | ● | ● | ● | ● | ● | ● | ● | ● | | | ● | ● | | | | | | ● | ● | | ● | ● | ● | ● | ● | ● | ● | | | | | | |
| 11 | ● | | ● | | ● | | | | ● | ● | | | | ● | ● | ● | | | | | ● | ● | | ● | ● | ● | ● | ● | ● | ● | ● | ● | | | ● | ● | | | | | | ● | ● | | | | ● | ● | | | ● | ● | | | | | | |
| 12 | ● | | ● | | ● | | | | ● | ● | ● | ● | | ● | ● | ● | | | | | ● | ● | | ● | ● | ● | ● | ● | ● | ● | ● | ● | | | ● | ● | | | | | | ● | ● | | | ● | ● | ● | ● | | ● | ● | | ● | ● | | |
| 13 | ● | | ● | | ● | | ● | | ● | ● | ● | ● | | ● | ● | ● | | | | | ● | ● | | ● | ● | ● | ● | ● | ● | ● | ● | ● | | | ● | ● | | | | | | ● | ● | | ● | ● | ● | ● | | ● | ● | | | ● | ● | | |
| 14 | ● | | ● | | ● | | | | ● | ● | | | ● | ● | ● | ● | | | | | ● | ● | | ● | ● | ● | ● | ● | ● | ● | ● | ● | | | ● | ● | | | | | | ● | ● | | | | ● | ● | | | ● | ● | ● | | ● | ● | | |
| 15 | ● | | ● | | ● | | | ● | ● | ● | | | ● | ● | ● | ● | | | | | ● | ● | | ● | ● | ● | ● | ● | ● | ● | ● | ● | | | ● | ● | | | | | | ● | ● | | | ● | ● | ● | | | ● | ● | ● | ● | ● | | | |
| 16 | ● | | ● | | ● | | | ● | ● | ● | | | ● | ● | ● | ● | | | | | ● | ● | | ● | ● | ● | ● | ● | ● | ● | ● | ● | | | ● | ● | | | | | | ● | ● | | | ● | ● | ● | | | ● | ● | ● | ● | ● | | | |
| ХП | ● | | ● | | ● | | ● | ● | ● | ● | ● | ● | ● | ● | ● | ● | | | | | ● | ● | | ● | ● | ● | ● | ● | ● | ● | ● | ● | | | ● | ● | | | | | | ● | ● | | | ● | ● | ● | ● | ● | ● | ● | ● | ● | ● | | | |

Упрощенная схема работы трех секционного сцепа на "СП" соединении тяговых двигателей ( 6 двигателей последовательно)

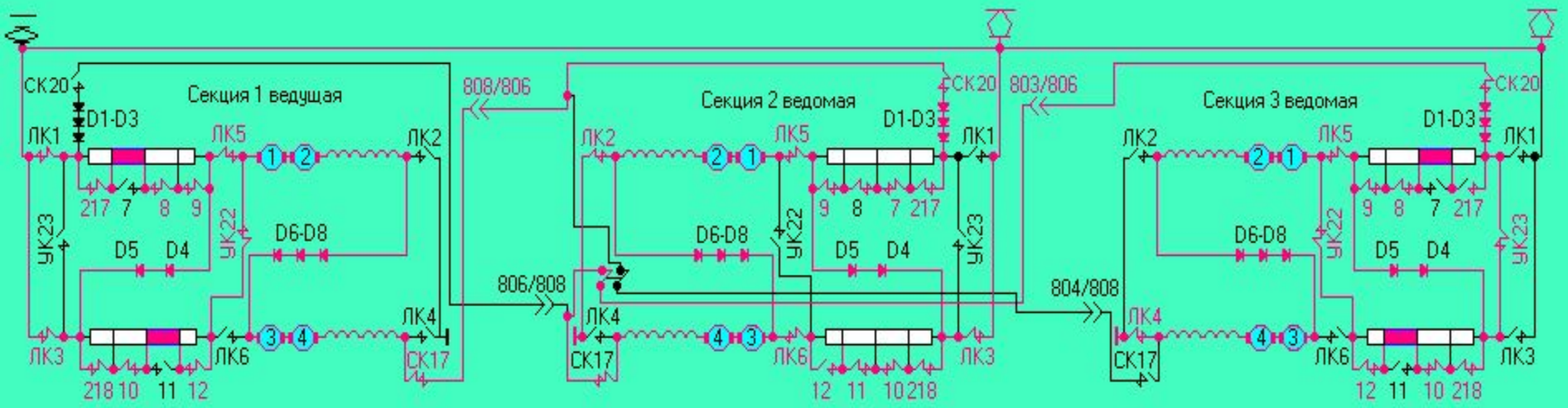


Порядок включения линейных (ЛК), реостатных (РК), уравнительных (УК) контакторов на "С" соединении трех секционного сцепа ( 6 тяговых двигателей последовательно)

| № | Линейные (ЛК) | | | | | | Реостатные (РК) | | | | | | | | | | | УК | | Линейные (ЛК) | | | | | | Реостатные (РК) | | | | | | | | | | | УК | | Линейные (ЛК) | | | | | | Реостатные (РК) | | | | | | | | | | | УК | |
|---|---|---|---|---|---|---|---|---|---|---|---|---|---|---|---|---|---|---|---|---|---|---|---|---|---|---|---|---|---|---|---|---|---|---|---|---|---|---|---|---|---|---|---|---|---|---|---|---|---|---|---|---|---|---|---|---|---|
| Поз | 1 | 2 | 3 | 4 | 5 | 6 | 217 | 7 | 8 | 9 | 218 | 10 | 11 | 12 | 22 | 17 | 20 | 23 | 24 | 1 | 2 | 3 | 4 | 5 | 6 | 217 | 7 | 8 | 9 | 218 | 10 | 11 | 12 | 22 | 17 | 20 | 23 | 24 | 1 | 2 | 3 | 4 | 5 | 6 | 217 | 7 | 8 | 9 | 218 | 10 | 11 | 12 | 22 | 17 | 20 | 23 | 24 |
| 1 | ● | | ● | | ● | | | | | | | | | | ● | ● | | | | | ● | ● | | ● | ● | ● | ● | | ● | ● | ● | ● | | | ● | ● | | | | | ● | ● | | | | | | | | | | | | | | | |
| 2 | ● | | ● | | ● | | | | | | | | | | ● | ● | | | | | ● | ● | | ● | ● | ● | ● | ● | ● | ● | ● | ● | | | ● | ● | | | | | ● | ● | | | | | | | | | | | | | | | |
| 3 | ● | | ● | | ● | | | | | ● | | | | | ● | ● | | | | | ● | ● | | ● | ● | ● | ● | ● | ● | ● | ● | ● | | | ● | ● | | | | | ● | ● | | | | | ● | | | | | | | | | | |
| 4 | ● | | ● | | ● | | | | | ● | | | ● | | ● | ● | | | | | ● | ● | | ● | ● | ● | ● | ● | ● | ● | ● | ● | | | ● | ● | | | | | ● | ● | | | | | ● | | | | | | | | | | |
| 5 | ● | | ● | | ● | | | ● | | ● | | | ● | | ● | ● | | | | | ● | ● | | ● | ● | ● | ● | ● | ● | ● | ● | ● | | | ● | ● | | | | | ● | ● | | | | ● | ● | | | | | | | | | | |
| 6 | ● | | ● | | ● | | ● | ● | | ● | | | ● | | ● | ● | | | | | ● | ● | | ● | ● | ● | ● | ● | ● | ● | ● | ● | | | ● | ● | | | | | ● | ● | | | ● | ● | ● | | | | | | | | | | |
| 7 | ● | | ● | | ● | | ● | ● | | ● | | ● | ● | | ● | ● | | | | | ● | ● | | ● | ● | ● | ● | ● | ● | ● | ● | ● | | | ● | ● | | | | | ● | ● | | | ● | ● | ● | | ● | | | | | | | | |
| 8 | ● | | ● | | ● | | ● | ● | | ● | | | | ● | ● | ● | | | | | ● | ● | | ● | ● | ● | ● | ● | ● | ● | ● | ● | | | ● | ● | | | | | ● | ● | | | ● | ● | ● | | | | ● | ● | | | | | |
| 9 | ● | | ● | | ● | | ● | ● | | ● | | ● | | ● | ● | ● | | | | | ● | ● | | ● | ● | ● | ● | ● | ● | ● | ● | ● | | | ● | ● | | | | | ● | ● | | | ● | ● | ● | | ● | | ● | ● | | | | | |
| 10 | ● | | ● | | ● | | ● | ● | | ● | ● | ● | | ● | ● | ● | | | | | ● | ● | | ● | ● | ● | ● | ● | ● | ● | ● | ● | | | ● | ● | | | | | ● | ● | | | ● | ● | | ● | ● | ● | | ● | ● | | | | |
| 11 | ● | | ● | | ● | | | | ● | ● | | | | ● | ● | ● | | | | | ● | ● | | ● | ● | ● | ● | ● | ● | ● | ● | ● | | | ● | ● | | | | | ● | ● | | | | | ● | ● | | | ● | ● | | | ● | ● | |
| 12 | ● | | ● | | ● | | | | ● | ● | ● | ● | | ● | ● | ● | | | | | ● | ● | | ● | ● | ● | ● | ● | ● | ● | ● | ● | | | ● | ● | | | | | ● | ● | | | | | ● | ● | ● | ● | ● | ● | ● | ● | | | |
| 13 | ● | | ● | | ● | | ● | | ● | ● | ● | ● | | ● | ● | ● | | | | | ● | ● | | ● | ● | ● | ● | ● | ● | ● | ● | ● | | | ● | ● | | | | | ● | ● | | | ● | | ● | ● | ● | ● | | ● | ● | | ● | ● | |
| 14 | ● | | ● | | ● | | | | ● | ● | | | ● | ● | ● | ● | | | | | ● | ● | | ● | ● | ● | ● | ● | ● | ● | ● | ● | | | ● | ● | | | | | ● | ● | | | | | ● | ● | | | ● | ● | ● | | ● | ● | |
| 15 | ● | | ● | | ● | | | ● | ● | ● | | | ● | ● | ● | ● | | | | | ● | ● | | ● | ● | ● | ● | ● | ● | ● | ● | ● | | | ● | ● | | | | | ● | ● | | | | ● | ● | ● | | | ● | ● | ● | | ● | ● | |
| 16 | ● | | ● | | ● | | | ● | ● | ● | | | ● | ● | ● | ● | | | | | ● | ● | | ● | ● | ● | ● | ● | ● | ● | ● | ● | | | ● | ● | | | | | ● | ● | | | | ● | ● | ● | | | ● | ● | ● | | ● | ● | |
| ХП | ● | | ● | | ● | | ● | ● | ● | ● | ● | ● | ● | ● | ● | ● | | | | | ● | ● | | ● | ● | ● | ● | ● | ● | ● | ● | ● | | | ● | ● | | | | | ● | ● | | | ● | ● | ● | ● | ● | ● | ● | ● | ● | | ● | ● | |

Упрощенная схема работы трех секционного сцепа на "СП" соединении тяговых двигателей ( 6 двигателей последовательно)

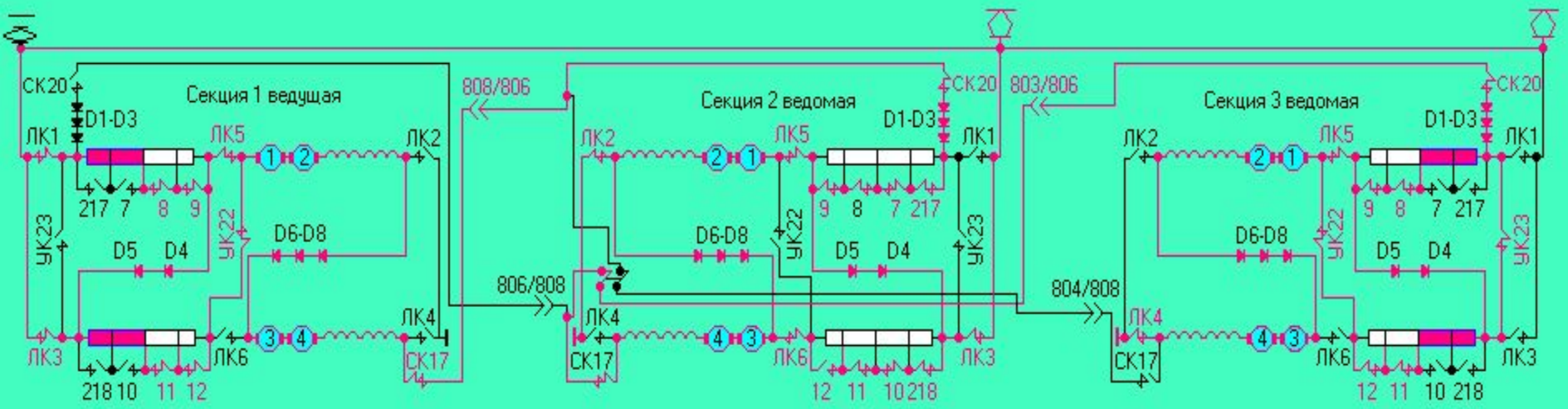


Порядок включения линейных (ЛК), реостатных (РК), уравнительных (УК) контакторов на "С" соединении трех секционного сцепа ( 6 тяговых двигателей последовательно)

| № | Линейные (ЛК) | | | | | | Реостатные (РК) | | | | | | | | | | | УК | | Линейные (ЛК) | | | | | | Реостатные (РК) | | | | | | | | | | | УК | | Линейные (ЛК) | | | | | | Реостатные (РК) | | | | | | | | | | | УК | |
|---|---|---|---|---|---|---|---|---|---|---|---|---|---|---|---|---|---|---|---|---|---|---|---|---|---|---|---|---|---|---|---|---|---|---|---|---|---|---|---|---|---|---|---|---|---|---|---|---|---|---|---|---|---|---|---|---|---|
| Поз | 1 | 2 | 3 | 4 | 5 | 6 | 217 | 7 | 8 | 9 | 218 | 10 | 11 | 12 | 22 | 17 | 20 | 23 | 24 | 1 | 2 | 3 | 4 | 5 | 6 | 217 | 7 | 8 | 9 | 218 | 10 | 11 | 12 | 22 | 17 | 20 | 23 | 24 | 1 | 2 | 3 | 4 | 5 | 6 | 217 | 7 | 8 | 9 | 218 | 10 | 11 | 12 | 22 | 17 | 20 | 23 | 24 |
| 1 | ● | | ● | | ● | | | | | | | | | | ● | ● | | | | | ● | ● | | ● | ● | ● | ● | | ● | ● | ● | ● | | | ● | ● | | | | | ● | ● | | | | | | | | | ● | | ● | ● | | | |
| 2 | ● | | ● | | ● | | | | | | | | | | ● | ● | | | | | ● | ● | | ● | ● | ● | ● | ● | ● | ● | ● | ● | | | ● | ● | | | | | ● | ● | | | | | | | | | ● | | ● | ● | | | |
| 3 | ● | | ● | | ● | | | | | ● | | | | | ● | ● | | | | | ● | ● | | ● | ● | ● | ● | ● | ● | ● | ● | ● | | | ● | ● | | | | | ● | ● | | | | | ● | | | | ● | | ● | ● | | | |
| 4 | ● | | ● | | ● | | | | | ● | | | ● | | ● | ● | | | | | ● | ● | | ● | ● | ● | ● | ● | ● | ● | ● | ● | | | ● | ● | | | | | ● | ● | | | | | ● | | | | ● | | ● | ● | | | |
| 5 | ● | | ● | | ● | | | ● | | ● | | | ● | | ● | ● | | | | | ● | ● | | ● | ● | ● | ● | ● | ● | ● | ● | ● | | | ● | ● | | | | | ● | ● | | | | | ● | | | ● | ● | | ● | ● | | | |
| 6 | ● | | ● | | ● | | ● | ● | | ● | | | ● | | ● | ● | | | | | ● | ● | | ● | ● | ● | ● | ● | ● | ● | ● | ● | | | ● | ● | | | | | ● | ● | | | | | ● | | ● | ● | ● | | ● | ● | | | |
| 7 | ● | | ● | | ● | | ● | ● | | ● | | ● | ● | | ● | ● | | | | | ● | ● | | ● | ● | ● | ● | ● | ● | ● | ● | ● | | | ● | ● | | | | | ● | ● | | | | | ● | | ● | ● | ● | | ● | ● | | | |
| 8 | ● | | ● | | ● | | ● | ● | | ● | | | | ● | ● | ● | | | | | ● | ● | | ● | ● | ● | ● | ● | ● | ● | ● | ● | | | ● | ● | | | | | ● | ● | | | | | ● | | ● | ● | ● | | | ● | ● | | |
| 9 | ● | | ● | | ● | | ● | ● | | ● | | ● | | ● | ● | ● | | | | | ● | ● | | ● | ● | ● | ● | ● | ● | ● | ● | ● | | | ● | ● | | | | | ● | ● | | | | | ● | | ● | ● | ● | | ● | ● | | | |
| 10 | ● | | ● | | ● | | ● | ● | | ● | ● | ● | | ● | ● | ● | | | | | ● | ● | | ● | ● | ● | ● | ● | ● | ● | ● | ● | | | ● | ● | | | | | ● | ● | | | | | ● | | ● | ● | ● | ● | ● | ● | | | |
| 11 | ● | | ● | | ● | | | | ● | ● | | | | ● | ● | ● | | | | | ● | ● | | ● | ● | ● | ● | ● | ● | ● | ● | ● | | | ● | ● | | | | | ● | ● | | | | | | ● | ● | | | ● | ● | | ● | | |
| 12 | ● | | ● | | ● | | | | ● | ● | ● | ● | | ● | ● | ● | | | | | ● | ● | | ● | ● | ● | ● | ● | ● | ● | ● | ● | | | ● | ● | | | | | ● | ● | | | | | | ● | ● | ● | ● | ● | ● | ● | | |
| 13 | ● | | ● | | ● | | ● | | ● | ● | ● | ● | | ● | ● | ● | | | | | ● | ● | | ● | ● | ● | ● | ● | ● | ● | ● | ● | | | ● | ● | | | | | ● | ● | | | | | ● | | ● | ● | ● | ● | | ● | ● | | |
| 14 | ● | | ● | | ● | | | | ● | ● | | | ● | ● | ● | ● | | | | | ● | ● | | ● | ● | ● | ● | ● | ● | ● | ● | ● | | | ● | ● | | | | | ● | ● | | | | | | ● | ● | | | ● | ● | ● | | ● | ● | |
| 15 | ● | | ● | | ● | | | ● | ● | ● | | | ● | ● | ● | ● | | | | | ● | ● | | ● | ● | ● | ● | ● | ● | ● | ● | ● | | | ● | ● | | | | | ● | ● | | | | | | ● | ● | ● | | ● | ● | ● | | ● | ● | |
| 16 | ● | | ● | | ● | | | ● | ● | ● | | ● | ● | ● | ● | ● | | | | | ● | ● | | ● | ● | ● | ● | ● | ● | ● | ● | ● | | | ● | ● | | | | | ● | ● | | | | | | ● | ● | ● | | ● | ● | ● | ● | ● | ● | |
| ХП | ● | | ● | | ● | | ● | ● | ● | ● | ● | ● | ● | ● | ● | ● | | | | | ● | ● | | ● | ● | ● | ● | ● | ● | ● | ● | ● | | | ● | ● | | | | | ● | ● | | | | | ● | ● | ● | ● | ● | ● | ● | ● | ● | ● | ● | |

Упрощенная схема работы трех секционного сцепа на "СП" соединении тяговых двигателей ( 6 двигателей последовательно)

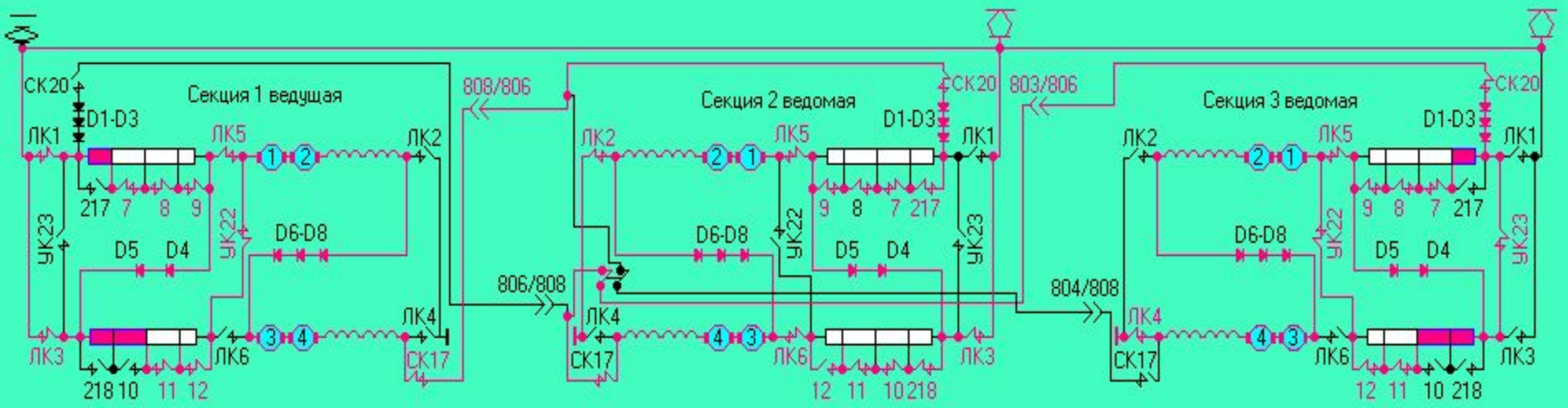


Порядок включения линейных (ЛК), реостатных (РК), уравнительных (УК) контакторов на "С" соединении трех секционного сцепа ( 6 тяговых двигателей последовательно)

| № | Линейные (ЛК) | | | | | | Реостатные (РК) | | | | | | | | | | | УК | | Линейные (ЛК) | | | | | | Реостатные (РК) | | | | | | | | | | | | УК | | Линейные (ЛК) | | | | | | Реостатные (РК) | | | | | | | | | | | УК | |
|---|---|---|---|---|---|---|---|---|---|---|---|---|---|---|---|---|---|---|---|---|---|---|---|---|---|---|---|---|---|---|---|---|---|---|---|---|---|---|---|---|---|---|---|---|---|---|---|---|---|---|---|---|---|---|---|---|---|---|
| Поз | 1 | 2 | 3 | 4 | 5 | 6 | 217 | 7 | 8 | 9 | 218 | 10 | 11 | 12 | 22 | 17 | 20 | 23 | 24 | 1 | 2 | 3 | 4 | 5 | 6 | 217 | 7 | 8 | 9 | 218 | 10 | 11 | 12 | 22 | 17 | 20 | 23 | 24 | 1 | 2 | 3 | 4 | 5 | 6 | 217 | 7 | 8 | 9 | 218 | 10 | 11 | 12 | 22 | 17 | 20 | 23 | 24 |
| 1 | ● | | ● | | ● | | | | | | | | | | ● | ● | | | | | ● | ● | | ● | ● | ● | ● | | ● | ● | ● | ● | | | ● | ● | | | | | | ● | ● | | | | | | | | | | | | | | | |
| 2 | ● | | ● | | ● | | | | | | | | | | ● | ● | | | | | ● | ● | | ● | ● | ● | ● | ● | ● | ● | ● | ● | | | ● | ● | | | | | | ● | ● | | | | | | | | | | | | | | | |
| 3 | ● | | ● | | ● | | | | | ● | | | | | ● | ● | | | | | ● | ● | | ● | ● | ● | ● | ● | ● | ● | ● | ● | | | ● | ● | | | | | | ● | ● | | | | ● | | | | | | | | | | | |
| 4 | ● | | ● | | ● | | | | | ● | | | ● | | ● | ● | | | | | ● | ● | | ● | ● | ● | ● | ● | ● | ● | ● | ● | | | ● | ● | | | | | | ● | ● | | | | ● | | | | | | | | | | | |
| 5 | ● | | ● | | ● | | | ● | | ● | | | ● | | ● | ● | | | | | ● | ● | | ● | ● | ● | ● | ● | ● | ● | ● | ● | | | ● | ● | | | | | | ● | ● | | | ● | ● | | | | | | | | | | | |
| 6 | ● | | ● | | ● | | ● | ● | | ● | | | ● | | ● | ● | | | | | ● | ● | | ● | ● | ● | ● | ● | ● | ● | ● | ● | | | ● | ● | | | | | | ● | ● | | ● | ● | ● | | | | | | | | | | | |
| 7 | ● | | ● | | ● | | ● | ● | | ● | | ● | ● | | ● | ● | | | | | ● | ● | | ● | ● | ● | ● | ● | ● | ● | ● | ● | | | ● | ● | | | | | | ● | ● | | ● | ● | ● | | ● | | | | | | | | | |
| 8 | ● | | ● | | ● | | ● | ● | | ● | | | | ● | ● | ● | | | | | ● | ● | | ● | ● | ● | ● | ● | ● | ● | ● | ● | | | ● | ● | | | | | | ● | ● | | ● | ● | ● | | | | ● | ● | | | | | |
| 9 | ● | | ● | | ● | | ● | ● | | ● | | ● | | ● | ● | ● | | | | | ● | ● | | ● | ● | ● | ● | ● | ● | ● | ● | ● | | | ● | ● | | | | | | ● | ● | | ● | ● | ● | | ● | | ● | ● | | | | | |
| 10 | ● | | ● | | ● | | ● | ● | | ● | ● | ● | | ● | ● | ● | | | | | ● | ● | | ● | ● | ● | ● | ● | ● | ● | ● | ● | | | ● | ● | | | | | | ● | ● | | ● | ● | ● | | ● | ● | ● | ● | | | | | |
| 11 | ● | | ● | | ● | | | | ● | ● | | | | ● | ● | ● | | | | | ● | ● | | ● | ● | ● | ● | ● | ● | ● | ● | ● | | | ● | ● | | | | | | ● | ● | | | | | ● | ● | | | ● | ● | | | | | |
| 12 | ● | | ● | | ● | | | | ● | ● | ● | ● | | ● | ● | ● | | | | | ● | ● | | ● | ● | ● | ● | ● | ● | ● | ● | ● | | | ● | ● | | | | | | ● | ● | | | | | ● | ● | ● | ● | ● | ● | | | | |
| 13 | ● | | ● | | ● | | ● | | ● | ● | ● | ● | | ● | ● | ● | | | | | ● | ● | | ● | ● | ● | ● | ● | ● | ● | ● | ● | | | ● | ● | | | | | | ● | ● | | ● | | ● | ● | ● | ● | ● | ● | | | | |
| 14 | ● | | ● | | ● | | | | ● | ● | | | ● | ● | ● | ● | | | | | ● | ● | | ● | ● | ● | ● | ● | ● | ● | ● | ● | | | ● | ● | | | | | | ● | ● | | | | ● | ● | | | | ● | ● | ● | | | |
| 15 | ● | | ● | | ● | | | ● | ● | ● | | | ● | ● | ● | ● | | | | | ● | ● | | ● | ● | ● | ● | ● | ● | ● | ● | ● | | | ● | ● | | | | | | ● | ● | | | ● | ● | ● | | | ● | ● | ● | | | ● | ● |
| 16 | ● | | ● | | ● | | | ● | ● | ● | | | ● | ● | ● | ● | | | | | ● | ● | | ● | ● | ● | ● | ● | ● | ● | ● | ● | | | ● | ● | | | | | | ● | ● | | | ● | ● | ● | | | ● | ● | ● | ● | | ● | ● |
| ХП | ● | | ● | | ● | | ● | ● | ● | ● | ● | ● | ● | ● | ● | ● | | | | | ● | ● | | ● | ● | ● | ● | ● | ● | ● | ● | ● | | | ● | ● | | | | | | ● | ● | | ● | ● | ● | ● | ● | ● | ● | ● | ● | | ● | ● |

Упрощенная схема работы трех секционного сцепа на "СП" соединении тяговых двигателей ( 6 двигателей последовательно)

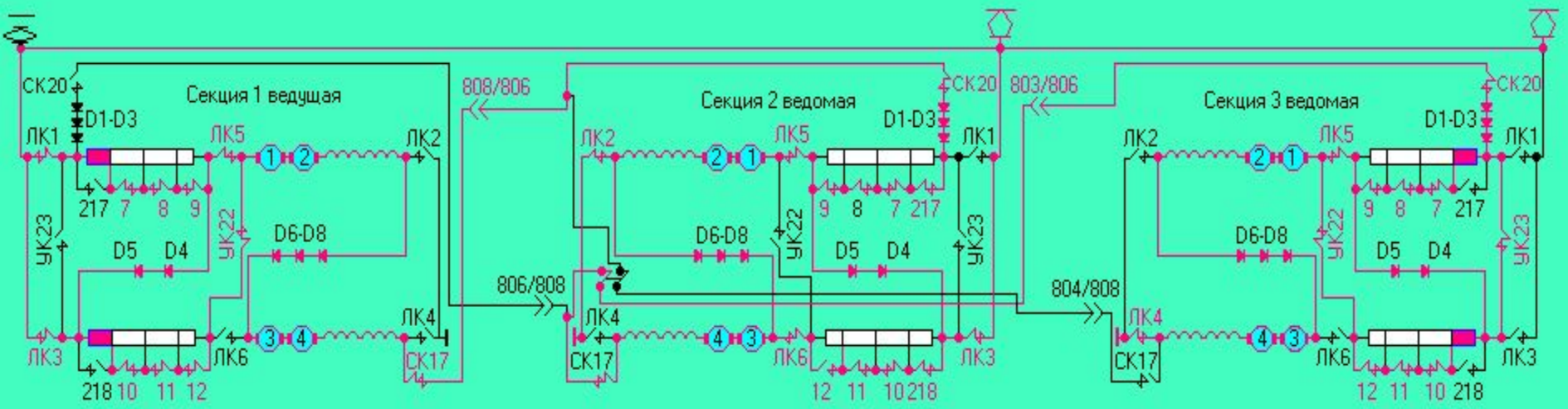


Порядок включения линейных (ЛК), реостатных (РК), уравнительных (УК) контакторов на "С" соединении трех секционного сцепа ( 6 тяговых двигателей последовательно)

| № | Линейные (ЛК) | | | | | | Реостатные (РК) | | | | | | | | | | | УК | | Линейные (ЛК) | | | | | | Реостатные (РК) | | | | | | | | | | | | УК | | Линейные (ЛК) | | | | | | Реостатные (РК) | | | | | | | | | | | УК | |
|---|---|---|---|---|---|---|---|---|---|---|---|---|---|---|---|---|---|---|---|---|---|---|---|---|---|---|---|---|---|---|---|---|---|---|---|---|---|---|---|---|---|---|---|---|---|---|---|---|---|---|---|---|---|---|---|---|---|---|
| Поз | 1 | 2 | 3 | 4 | 5 | 6 | 217 | 7 | 8 | 9 | 218 | 10 | 11 | 12 | 22 | 17 | 20 | 23 | 24 | 1 | 2 | 3 | 4 | 5 | 6 | 217 | 7 | 8 | 9 | 218 | 10 | 11 | 12 | 22 | 17 | 20 | 23 | 24 | 1 | 2 | 3 | 4 | 5 | 6 | 217 | 7 | 8 | 9 | 218 | 10 | 11 | 12 | 22 | 17 | 20 | 23 | 24 |
| 1 | ● | | ● | | ● | | | | | | | | | | ● | ● | | | | | ● | ● | | ● | ● | ● | ● | | ● | ● | ● | ● | | | ● | ● | | | | | | ● | ● | | | | | | | | | ● | | ● | ● | | |
| 2 | ● | | ● | | ● | | | | | | | | | | ● | ● | | | | | ● | ● | | ● | ● | ● | ● | ● | ● | ● | ● | ● | ● | | ● | ● | | | | | | ● | ● | | | | | | | | | ● | | ● | ● | | |
| 3 | ● | | ● | | ● | | | | | ● | | | | | ● | ● | | | | | ● | ● | | ● | ● | ● | ● | ● | ● | ● | ● | ● | ● | | ● | ● | | | | | | ● | ● | | | | ● | | | | | ● | | ● | ● | | |
| 4 | ● | | ● | | ● | | | | | ● | | | ● | | ● | ● | | | | | ● | ● | | ● | ● | ● | ● | ● | ● | ● | ● | ● | ● | | ● | ● | | | | | | ● | ● | | | | ● | | | | | ● | | ● | ● | | |
| 5 | ● | | ● | | ● | | | ● | | ● | | | ● | | ● | ● | | | | | ● | ● | | ● | ● | ● | ● | ● | ● | ● | ● | ● | ● | | ● | ● | | | | | | ● | ● | | | ● | ● | | | | | ● | | ● | ● | | |
| 6 | ● | | ● | | ● | | ● | ● | | ● | | | ● | | ● | ● | | | | | ● | ● | | ● | ● | ● | ● | ● | ● | ● | ● | ● | ● | | ● | ● | | | | | | ● | ● | | | ● | ● | | | | | ● | | ● | ● | | |
| 7 | ● | | ● | | ● | | ● | ● | | ● | | ● | ● | | ● | ● | | | | | ● | ● | | ● | ● | ● | ● | ● | ● | ● | ● | ● | ● | | ● | ● | | | | | | ● | ● | | | ● | ● | | ● | | ● | ● | | ● | ● | | |
| 8 | ● | | ● | | ● | | ● | ● | | ● | | | | ● | ● | ● | | | | | ● | ● | | ● | ● | ● | ● | ● | ● | ● | ● | ● | ● | | ● | ● | | | | | | ● | ● | | | ● | ● | | | | ● | ● | ● | ● | ● | | |
| 9 | ● | | ● | | ● | | ● | ● | | ● | | ● | | ● | ● | ● | | | | | ● | ● | | ● | ● | ● | ● | ● | ● | ● | ● | ● | ● | | ● | ● | | | | | | ● | ● | | | ● | ● | | ● | | ● | ● | ● | ● | ● | | |
| 10 | ● | | ● | | ● | | ● | ● | | ● | ● | ● | | ● | ● | ● | | | | | ● | ● | | ● | ● | ● | ● | ● | ● | ● | ● | ● | ● | | ● | ● | | | | | | ● | ● | | | ● | ● | | ● | ● | ● | ● | ● | ● | ● | | |
| 11 | ● | | ● | | ● | | | | ● | ● | | | | ● | ● | ● | | | | | ● | ● | | ● | ● | ● | ● | ● | ● | ● | ● | ● | ● | | ● | ● | | | | | | ● | ● | | | | | ● | ● | | | ● | ● | | ● | ● | | |
| 12 | ● | | ● | | ● | | | | ● | ● | ● | ● | | ● | ● | ● | | | | | ● | ● | | ● | ● | ● | ● | ● | ● | ● | ● | ● | ● | | ● | ● | | | | | | ● | ● | | | | | ● | ● | ● | ● | ● | ● | ● | ● | ● | | |
| 13 | ● | | ● | | ● | | ● | | ● | ● | ● | ● | | ● | ● | ● | | | | | ● | ● | | ● | ● | ● | ● | ● | ● | ● | ● | ● | ● | | ● | ● | | | | | | ● | ● | | | ● | | ● | ● | ● | ● | | ● | ● | | ● | ● | | |
| 14 | ● | | ● | | ● | | | | ● | ● | | | ● | ● | ● | ● | | | | | ● | ● | | ● | ● | ● | ● | ● | ● | ● | ● | ● | ● | | ● | ● | | | | | | ● | ● | | | | | ● | ● | | | ● | ● | ● | ● | ● | | |
| 15 | ● | | ● | | ● | | | ● | ● | ● | | | ● | ● | ● | ● | | | | | ● | ● | | ● | ● | ● | ● | ● | ● | ● | ● | ● | ● | | ● | ● | | | | | | ● | ● | | | | ● | ● | ● | | | ● | ● | ● | ● | ● | | |
| 16 | ● | | ● | | ● | | | ● | ● | ● | | | ● | ● | ● | ● | | | | | ● | ● | | ● | ● | ● | ● | ● | ● | ● | ● | ● | ● | | ● | ● | | | | | | ● | ● | | | | ● | ● | ● | | | ● | ● | ● | ● | ● | | |
| ХП | ● | | ● | | ● | | ● | ● | ● | ● | ● | ● | ● | ● | ● | ● | | | | | ● | ● | | ● | ● | ● | ● | ● | ● | ● | ● | ● | ● | | ● | ● | | | | | | ● | ● | | | ● | ● | ● | ● | ● | ● | ● | ● | ● | ● | | |

Упрощенная схема работы трех секционного сцепа на "СП" соединении тяговых двигателей ( 6 двигателей последовательно)

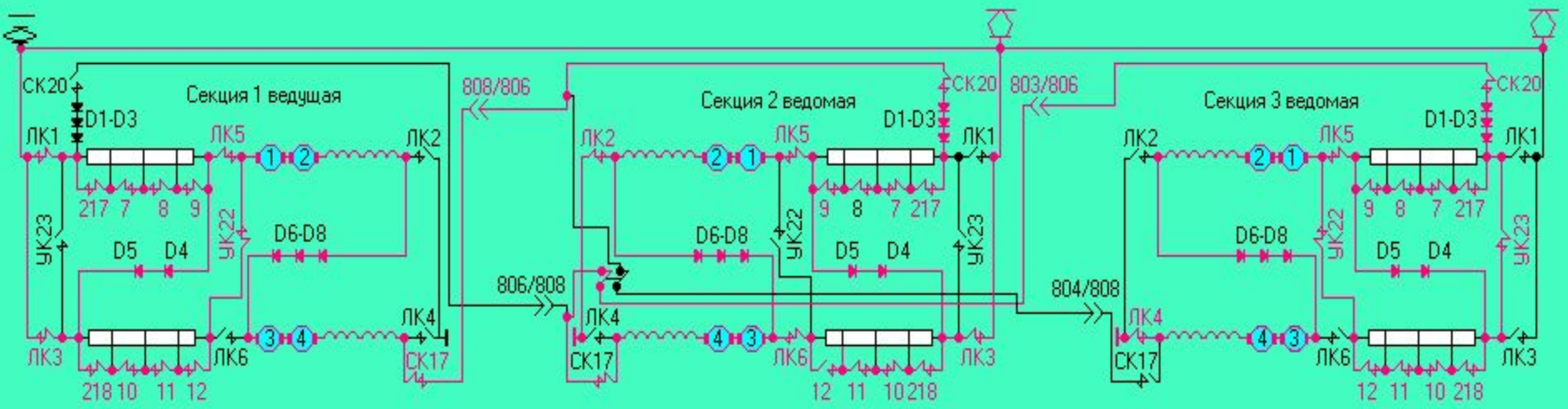


Порядок включения линейных (ЛК), реостатных (РК), уравнительных (УК) контакторов на "С" соединении трех секционного сцепа ( 6 тяговых двигателей последовательно)

| № | Линейные (ЛК) | | | | | | Реостатные (РК) | | | | | | | | | | | УК | | Линейные (ЛК) | | | | | | Реостатные (РК) | | | | | | | | | | | | УК | | Линейные (ЛК) | | | | | | Реостатные (РК) | | | | | | | | | | | УК | |
|---|---|---|---|---|---|---|---|---|---|---|---|---|---|---|---|---|---|---|---|---|---|---|---|---|---|---|---|---|---|---|---|---|---|---|---|---|---|---|---|---|---|---|---|---|---|---|---|---|---|---|---|---|---|---|---|---|---|---|
| Поз | 1 | 2 | 3 | 4 | 5 | 6 | 217 | 7 | 8 | 9 | 218 | 10 | 11 | 12 | 22 | 17 | 20 | 23 | 24 | 1 | 2 | 3 | 4 | 5 | 6 | 217 | 7 | 8 | 9 | 218 | 10 | 11 | 12 | 22 | 17 | 20 | 23 | 24 | 1 | 2 | 3 | 4 | 5 | 6 | 217 | 7 | 8 | 9 | 218 | 10 | 11 | 12 | 22 | 17 | 20 | 23 | 24 |
| 1 | ● | | ● | | ● | | | | | | | | | | ● | ● | | | | | ● | ● | | ● | ● | ● | ● | | ● | ● | ● | ● | | | ● | ● | | | | | ● | ● | | | | | | | | | ● | | ● | ● | | | |
| 2 | ● | | ● | | ● | | | | | | | | | | ● | ● | | | | | ● | ● | | ● | ● | ● | ● | ● | ● | ● | ● | ● | | | ● | ● | | | | | ● | ● | | | | | | | | | ● | | ● | ● | | | |
| 3 | ● | | ● | | ● | | | | | ● | | | | | ● | ● | | | | | ● | ● | | ● | ● | ● | ● | ● | ● | ● | ● | ● | | | ● | ● | | | | | ● | ● | | | | | ● | | | | ● | | ● | ● | | | |
| 4 | ● | | ● | | ● | | | | | ● | | | ● | | ● | ● | | | | | ● | ● | | ● | ● | ● | ● | ● | ● | ● | ● | ● | | | ● | ● | | | | | ● | ● | | | | | ● | | | | ● | | ● | ● | | | |
| 5 | ● | | ● | | ● | | | ● | | ● | | | ● | | ● | ● | | | | | ● | ● | | ● | ● | ● | ● | ● | ● | ● | ● | ● | | | ● | ● | | | | | ● | ● | | | | | | | | | ● | | ● | ● | | | |
| 6 | ● | | ● | | ● | | ● | ● | | ● | | | ● | | ● | ● | | | | | ● | ● | | ● | ● | ● | ● | ● | ● | ● | ● | ● | | | ● | ● | | | | | ● | ● | | | | | ● | | | | ● | | ● | ● | | | |
| 7 | ● | | ● | | ● | | ● | ● | | ● | | ● | ● | | ● | ● | | | | | ● | ● | | ● | ● | ● | ● | ● | ● | ● | ● | ● | | | ● | ● | | | | | ● | ● | | | | | ● | | ● | | ● | | ● | ● | | | |
| 8 | ● | | ● | | ● | | ● | ● | | ● | | | | ● | ● | ● | | | | | ● | ● | | ● | ● | ● | ● | ● | ● | ● | ● | ● | | | ● | ● | | | | | ● | ● | | | | | ● | | | ● | ● | | ● | ● | | | |
| 9 | ● | | ● | | ● | | ● | ● | | ● | | ● | | ● | ● | ● | | | | | ● | ● | | ● | ● | ● | ● | ● | ● | ● | ● | ● | | | ● | ● | | | | | ● | ● | | | | | ● | | ● | | ● | | ● | ● | | | |
| 10 | ● | | ● | | ● | | ● | ● | | ● | ● | ● | | ● | ● | ● | | | | | ● | ● | | ● | ● | ● | ● | ● | ● | ● | ● | ● | | | ● | ● | | | | | ● | ● | | | | | ● | ● | ● | | ● | ● | ● | ● | | | |
| 11 | ● | | ● | | ● | | | | ● | ● | | | ● | | ● | ● | | | | | ● | ● | | ● | ● | ● | ● | ● | ● | ● | ● | ● | | | ● | ● | | | | | ● | ● | | | | | | | ● | ● | | | ● | ● | | | |
| 12 | ● | | ● | | ● | | | | ● | ● | ● | ● | | ● | ● | ● | | | | | ● | ● | | ● | ● | ● | ● | ● | ● | ● | ● | ● | | | ● | ● | | | | | ● | ● | | | | | | | ● | ● | ● | ● | ● | ● | | | |
| 13 | ● | | ● | | ● | | ● | | ● | ● | ● | ● | | ● | ● | ● | | | | | ● | ● | | ● | ● | ● | ● | ● | ● | ● | ● | ● | | | ● | ● | | | | | ● | ● | | | | | ● | | ● | ● | ● | ● | | ● | ● | | | |
| 14 | ● | | ● | | ● | | | | ● | ● | | | ● | ● | ● | ● | | | | | ● | ● | | ● | ● | ● | ● | ● | ● | ● | ● | ● | | | ● | ● | | | | | ● | ● | | | | | | | ● | ● | | | ● | ● | ● | ● | |
| 15 | ● | | ● | | ● | | | ● | ● | ● | | | ● | ● | ● | ● | | | | | ● | ● | | ● | ● | ● | ● | ● | ● | ● | ● | ● | | | ● | ● | | | | | ● | ● | | | | | | ● | ● | ● | | | ● | ● | ● | ● | | | |
| 16 | ● | | ● | | ● | | | ● | ● | ● | | ● | ● | ● | ● | ● | | | | | ● | ● | | ● | ● | ● | ● | ● | ● | ● | ● | ● | | | ● | ● | | | | | ● | ● | | | | | | ● | ● | ● | | ● | ● | ● | ● | | | |
| ХП | ● | | ● | | ● | | ● | ● | ● | ● | ● | ● | ● | ● | ● | ● | | | | | ● | ● | | ● | ● | ● | ● | ● | ● | ● | ● | ● | | | ● | ● | | | | | ● | ● | | | | | ● | ● | ● | ● | ● | ● | ● | ● | ● | | | ● | ● | | |

# Упрощенная схема трех секционного сцепа на «СП» соединении тяговых двигателей ( 4 двигателя последовательно)

Упрощенная схема работы трех секционного сцепа на "СП" соединении тяговых двигателей ( 4 двигателя последовательно)

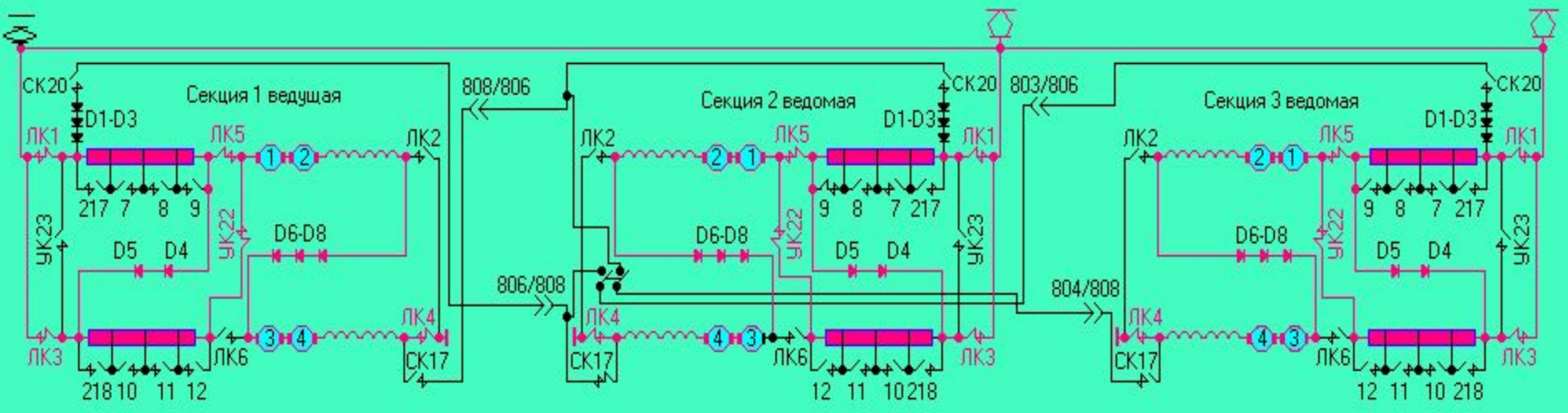


Порядок включения линейных (ЛК), реостатных (РК), уравнительных (УК) контакторов на "СП" соединении тяговых двигателей ( 4 двигателя последовательно)

| № | Линейные (ЛК) | | | | | | Реостатные (РК) | | | | | | | | | | | УК | |
|---|---|---|---|---|---|---|---|---|---|---|---|---|---|---|---|---|---|---|---|
| Поз | 1 | 2 | 3 | 4 | 5 | 6 | 217 | 7 | 8 | 9 | 218 | 10 | 11 | 12 | 22 | 17 | 20 | 23 | 24 |
| 1 | ● | | ● | ● | ● | | | | | | | | | | ● | | | | |
| 2 | ● | | ● | ● | ● | | | | | ● | | | | | ● | | | | |
| 3 | ● | | ● | ● | ● | | | | | ● | | | ● | | ● | | | | |
| 4 | ● | | ● | ● | ● | | | ● | | ● | | | ● | | ● | | | | |
| 5 | ● | | ● | ● | ● | | ● | ● | | ● | | | ● | | ● | | | | |
| 6 | ● | | ● | ● | ● | | ● | ● | | ● | | ● | ● | | ● | | | | |
| 7 | ● | | ● | ● | ● | | ● | ● | | ● | | | | ● | ● | | | | |
| 8 | ● | | ● | ● | ● | | ● | ● | | ● | | ● | | ● | ● | | | | |
| 9 | ● | | ● | ● | ● | | ● | ● | | ● | ● | ● | | ● | ● | | | | |
| 10 | ● | | ● | ● | ● | | | | ● | ● | | | | ● | ● | | | | |
| 11 | ● | | ● | ● | ● | | | | ● | ● | ● | ● | | ● | ● | | | | |
| 12 | ● | | ● | ● | ● | | ● | | ● | ● | ● | ● | | ● | ● | | | | |
| 13 | ● | | ● | ● | ● | | | | ● | ● | | | ● | ● | ● | | | | |
| 14 | ● | | ● | ● | ● | | | ● | ● | ● | | | ● | ● | ● | | | | |
| 15 | ● | | ● | ● | ● | | | ● | ● | ● | | ● | ● | ● | ● | | | | |
| ХП | ● | | ● | ● | ● | | ● | ● | ● | ● | ● | ● | ● | ● | ● | | | | |

Упрощенная схема работы трех секционного сцепа на "СП" соединении тяговых двигателей ( 4 двигателя последовательно)

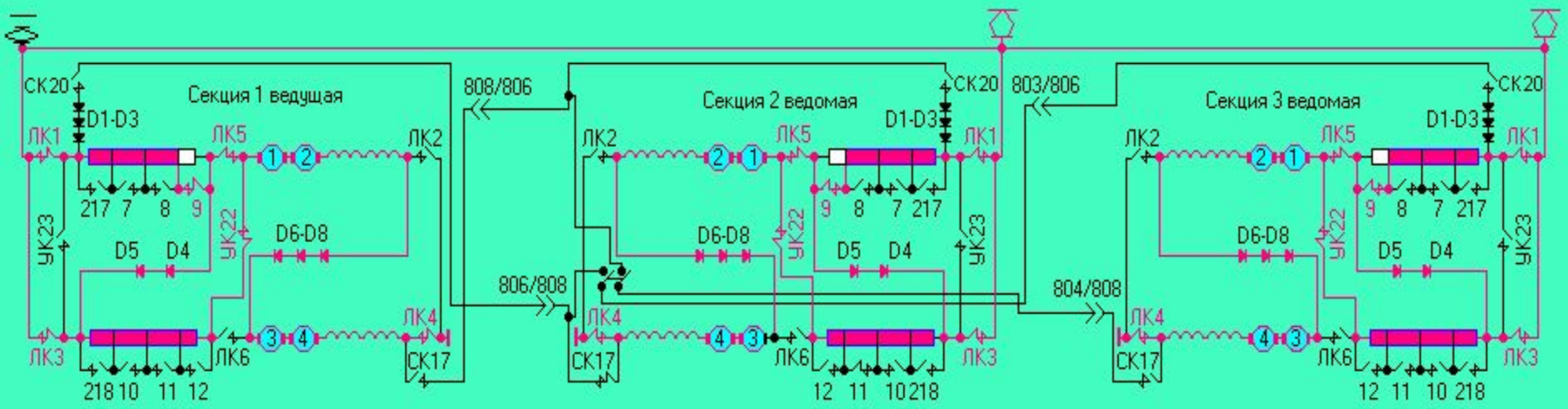


Порядок включения линейных (ЛК), реостатных (РК), уравнительных (УК) контакторов на "СП" соединении тяговых двигателей ( 4 двигателя последовательно)

| № | Линейные (ЛК) | | | | | | Реостатные (РК) | | | | | | | | | | | УК | |
|---|---|---|---|---|---|---|---|---|---|---|---|---|---|---|---|---|---|---|---|
| Поз | 1 | 2 | 3 | 4 | 5 | 6 | 217 | 7 | 8 | 9 | 218 | 10 | 11 | 12 | 22 | 17 | 20 | 23 | 24 |
| 1 | ● | | ● | ● | ● | | | | | | | | | | ● | | | | |
| 2 | ● | | ● | ● | ● | | | | | ● | | | | | ● | | | | |
| 3 | ● | | ● | ● | ● | | | | | ● | | | ● | | ● | | | | |
| 4 | ● | | ● | ● | ● | | | ● | | ● | | | ● | | ● | | | | |
| 5 | ● | | ● | ● | ● | | ● | ● | | ● | | | ● | | ● | | | | |
| 6 | ● | | ● | ● | ● | | ● | ● | | ● | | ● | ● | | ● | | | | |
| 7 | ● | | ● | ● | ● | | ● | ● | | ● | | | | ● | ● | | | | |
| 8 | ● | | ● | ● | ● | | ● | ● | | ● | | ● | | ● | ● | | | | |
| 9 | ● | | ● | ● | ● | | ● | ● | | ● | ● | ● | | ● | ● | | | | |
| 10 | ● | | ● | ● | ● | | | | ● | ● | | | | ● | ● | | | | |
| 11 | ● | | ● | ● | ● | | | | ● | ● | ● | ● | | ● | ● | | | | |
| 12 | ● | | ● | ● | ● | | ● | | ● | ● | ● | ● | | ● | ● | | | | |
| 13 | ● | | ● | ● | ● | | | | ● | ● | | | ● | ● | ● | | | | |
| 14 | ● | | ● | ● | ● | | | ● | ● | ● | | | ● | ● | ● | | | | |
| 15 | ● | | ● | ● | ● | | | ● | ● | ● | | ● | ● | ● | ● | | | | |
| ХП | ● | | ● | ● | ● | | ● | ● | ● | ● | ● | ● | ● | ● | ● | | | | |

Упрощенная схема работы трех секционного сцепа на "СП" соединении тяговых двигателей ( 4 двигателя последовательно)

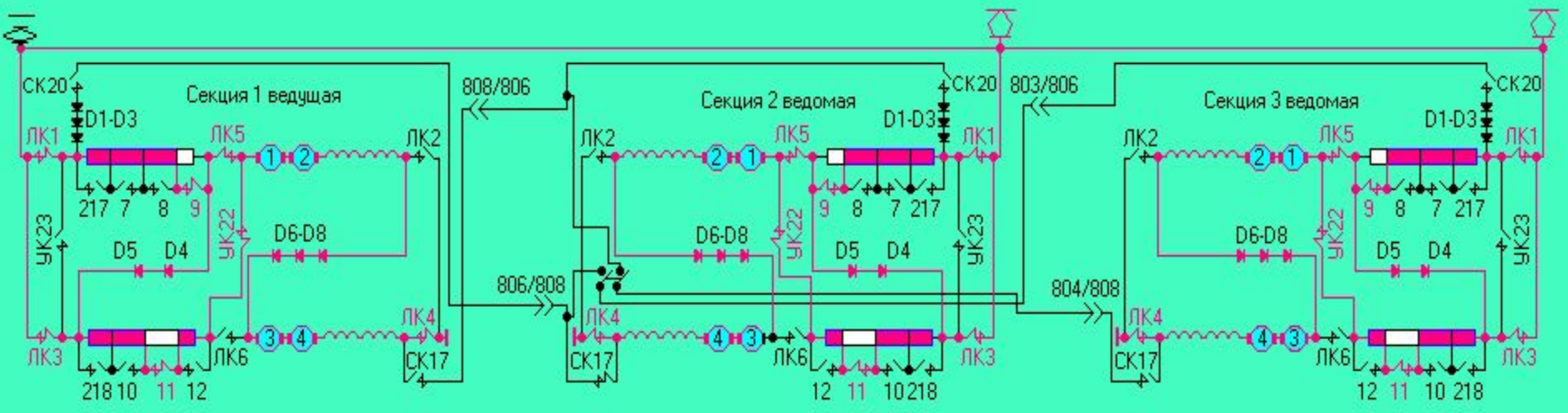


Порядок включения линейных (ЛК), реостатных (РК), уравнительных (УК) контакторов на "СП" соединении тяговых двигателей ( 4 двигателя последовательно)

| № | Линейные (ЛК) | | | | | | Реостатные (РК) | | | | | | | | | | | УК | |
|---|---|---|---|---|---|---|---|---|---|---|---|---|---|---|---|---|---|---|---|
| Поз | 1 | 2 | 3 | 4 | 5 | 6 | 217 | 7 | 8 | 9 | 218 | 10 | 11 | 12 | 22 | 17 | 20 | 23 | 24 |
| 1 | ● | | ● | ● | ● | | | | | | | | | | ● | | | | |
| 2 | ● | | ● | ● | ● | | | | | ● | | | | | ● | | | | |
| 3 | ● | | ● | ● | ● | | | | | ● | | | ● | | ● | | | | |
| 4 | ● | | ● | ● | ● | | | ● | | ● | | | ● | | ● | | | | |
| 5 | ● | | ● | ● | ● | | ● | ● | | ● | | | ● | | ● | | | | |
| 6 | ● | | ● | ● | ● | | ● | ● | | ● | | ● | ● | | ● | | | | |
| 7 | ● | | ● | ● | ● | | ● | ● | | ● | | | | ● | ● | | | | |
| 8 | ● | | ● | ● | ● | | ● | ● | | ● | | ● | | ● | ● | | | | |
| 9 | ● | | ● | ● | ● | | ● | ● | | ● | ● | ● | | ● | ● | | | | |
| 10 | ● | | ● | ● | ● | | | | ● | ● | | | | ● | ● | | | | |
| 11 | ● | | ● | ● | ● | | | | ● | ● | ● | ● | | ● | ● | | | | |
| 12 | ● | | ● | ● | ● | | ● | | ● | ● | ● | ● | | ● | ● | | | | |
| 13 | ● | | ● | ● | ● | | | | ● | ● | | | ● | ● | ● | | | | |
| 14 | ● | | ● | ● | ● | | | ● | ● | ● | | | ● | ● | ● | | | | |
| 15 | ● | | ● | ● | ● | | | ● | ● | ● | | ● | ● | ● | ● | | | | |
| ХП | ● | | ● | ● | ● | | ● | ● | ● | ● | ● | ● | ● | ● | ● | | | | |

Упрощенная схема работы трех секционного сцепа на "СП" соединении тяговых двигателей ( 4 двигателя последовательно)

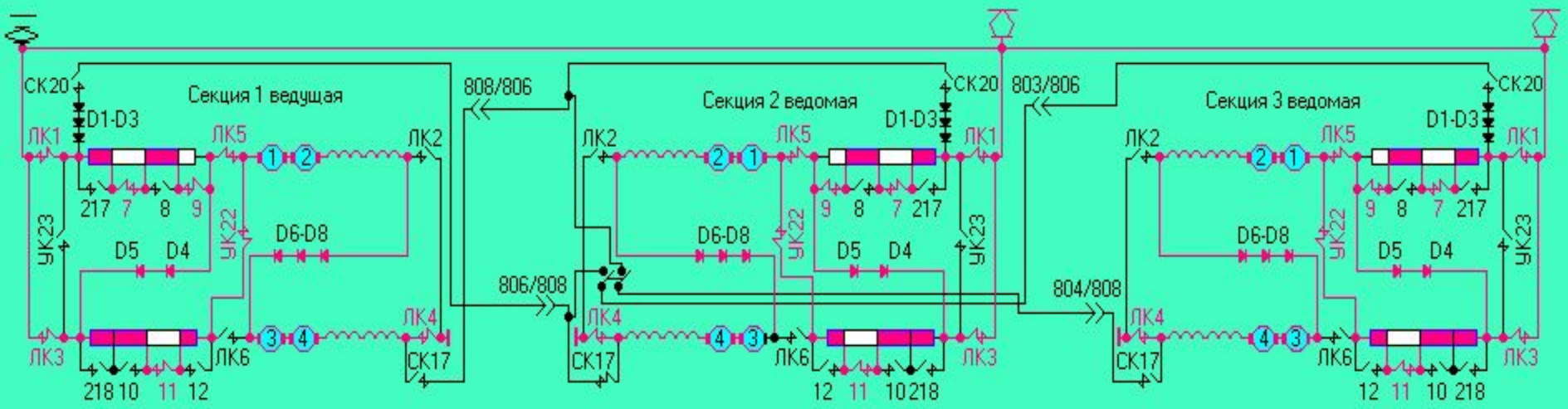


Порядок включения линейных (ЛК), реостатных (РК), уравнительных (УК) контакторов на "СП" соединении тяговых двигателей ( 4 двигателя последовательно)

| № | Линейные (ЛК) | | | | | | Реостатные (РК) | | | | | | | | | | | УК | |
|---|---|---|---|---|---|---|---|---|---|---|---|---|---|---|---|---|---|---|---|
| Поз | 1 | 2 | 3 | 4 | 5 | 6 | 217 | 7 | 8 | 9 | 218 | 10 | 11 | 12 | 22 | 17 | 20 | 23 | 24 |
| 1 | ● | | ● | ● | ● | | | | | | | | | | ● | | | | |
| 2 | ● | | ● | ● | ● | | | | | ● | | | | | ● | | | | |
| 3 | ● | | ● | ● | ● | | | | | ● | | | ● | | ● | | | | |
| 4 | ● | | ● | ● | ● | | | ● | | ● | | | ● | | ● | | | | |
| 5 | ● | | ● | ● | ● | | ● | ● | | ● | | | ● | | ● | | | | |
| 6 | ● | | ● | ● | ● | | ● | ● | | ● | | ● | ● | | ● | | | | |
| 7 | ● | | ● | ● | ● | | ● | ● | | ● | | | | ● | ● | | | | |
| 8 | ● | | ● | ● | ● | | ● | ● | | ● | | ● | | ● | ● | | | | |
| 9 | ● | | ● | ● | ● | | ● | ● | | ● | ● | ● | | ● | ● | | | | |
| 10 | ● | | ● | ● | ● | | | | ● | ● | | | | ● | ● | | | | |
| 11 | ● | | ● | ● | ● | | | | ● | ● | ● | ● | | ● | ● | | | | |
| 12 | ● | | ● | ● | ● | | ● | | ● | ● | ● | ● | | ● | ● | | | | |
| 13 | ● | | ● | ● | ● | | | | ● | ● | | | ● | ● | ● | | | | |
| 14 | ● | | ● | ● | ● | | | ● | ● | ● | | | ● | ● | ● | | | | |
| 15 | ● | | ● | ● | ● | | | ● | ● | ● | | ● | ● | ● | ● | | | | |
| ХП | ● | | ● | ● | ● | | ● | ● | ● | ● | ● | ● | ● | ● | ● | | | | |

Упрощенная схема работы трех секционного сцепа на "СП" соединении тяговых двигателей ( 4 двигателя последовательно)

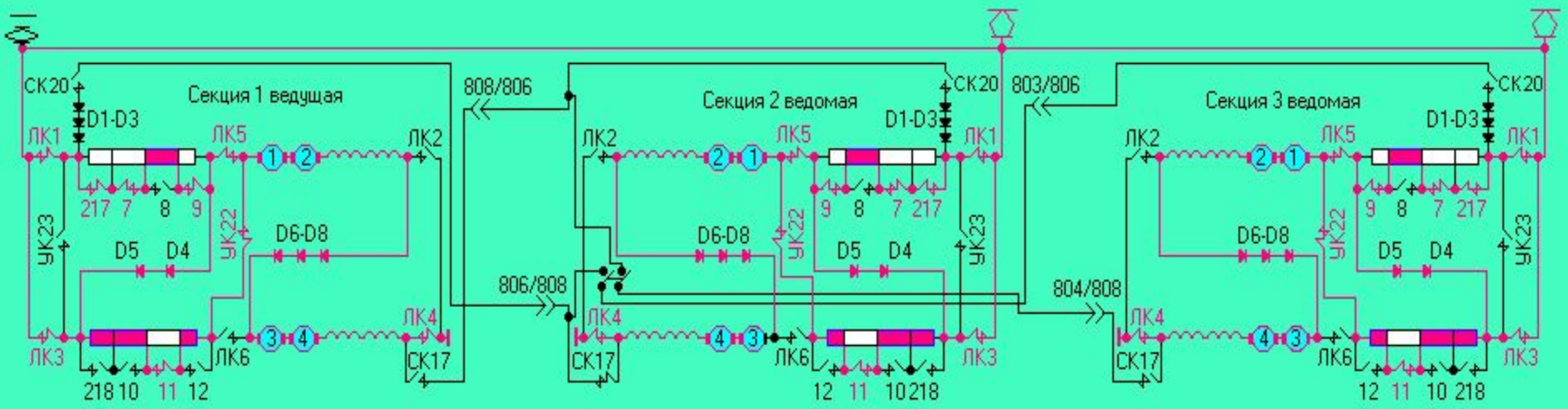


Порядок включения линейных (ЛК), реостатных (РК), уравнительных (УК) контакторов на "СП" соединении тяговых двигателей ( 4 двигателя последовательно)

| № | Линейные (ЛК) | | | | | | Реостатные (РК) | | | | | | | | | | | УК | |
|---|---|---|---|---|---|---|---|---|---|---|---|---|---|---|---|---|---|---|---|
| Поз | 1 | 2 | 3 | 4 | 5 | 6 | 217 | 7 | 8 | 9 | 218 | 10 | 11 | 12 | 22 | 17 | 20 | 23 | 24 |
| 1 | ● | | ● | ● | ● | | | | | | | | | | ● | | | | |
| 2 | ● | | ● | ● | ● | | | | | ● | | | | | ● | | | | |
| 3 | ● | | ● | ● | ● | | | | | ● | | | ● | | ● | | | | |
| 4 | ● | | ● | ● | ● | | | ● | | ● | | | ● | | ● | | | | |
| 5 | ● | | ● | ● | ● | | ● | ● | | ● | | | ● | | ● | | | | |
| 6 | ● | | ● | ● | ● | | ● | ● | | ● | | ● | ● | | ● | | | | |
| 7 | ● | | ● | ● | ● | | ● | ● | | ● | | | | ● | ● | | | | |
| 8 | ● | | ● | ● | ● | | ● | ● | | ● | | ● | | ● | ● | | | | |
| 9 | ● | | ● | ● | ● | | ● | ● | | ● | ● | ● | | ● | ● | | | | |
| 10 | ● | | ● | ● | ● | | | | ● | ● | | | | ● | ● | | | | |
| 11 | ● | | ● | ● | ● | | | | ● | ● | ● | ● | | ● | ● | | | | |
| 12 | ● | | ● | ● | ● | | ● | | ● | ● | ● | ● | | ● | ● | | | | |
| 13 | ● | | ● | ● | ● | | | | ● | ● | | | ● | ● | ● | | | | |
| 14 | ● | | ● | ● | ● | | | ● | ● | ● | | | ● | ● | ● | | | | |
| 15 | ● | | ● | ● | ● | | | ● | ● | ● | | ● | ● | ● | ● | | | | |
| ХП | ● | | ● | ● | ● | | ● | ● | ● | ● | ● | ● | ● | ● | ● | | | | |

Упрощенная схема работы трех секционного сцепа на "СП" соединении тяговых двигателей ( 4 двигателя последовательно)

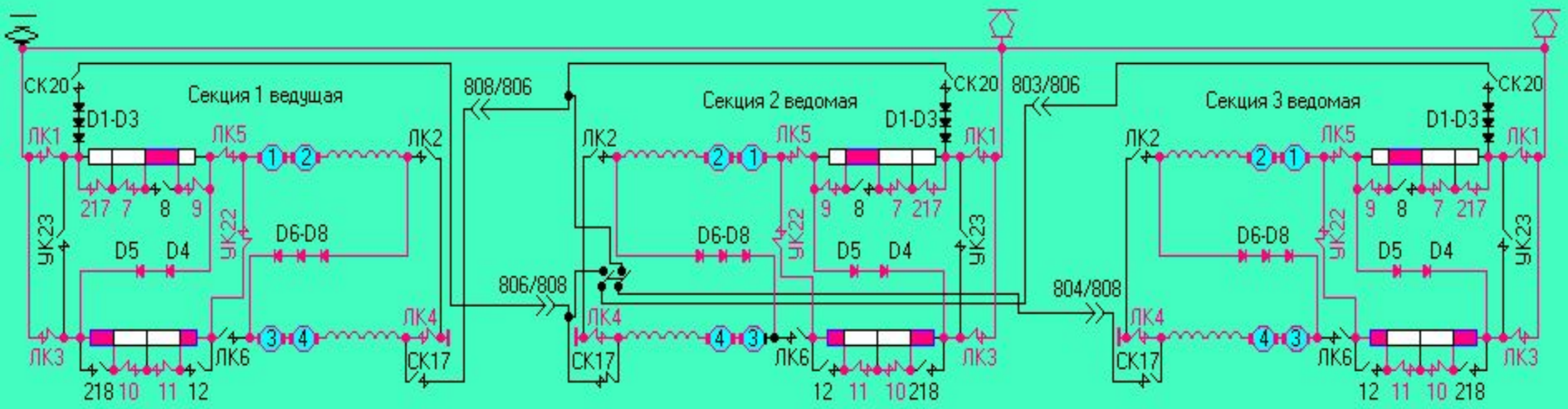


Порядок включения линейных (ЛК), реостатных (РК), уравнительных (УК) контакторов на "СП" соединении тяговых двигателей ( 4 двигателя последовательно)

| № | Линейные (ЛК) | | | | | | Реостатные (РК) | | | | | | | | | | | УК | |
|---|---|---|---|---|---|---|---|---|---|---|---|---|---|---|---|---|---|---|---|
| Поз | 1 | 2 | 3 | 4 | 5 | 6 | 217 | 7 | 8 | 9 | 218 | 10 | 11 | 12 | 22 | 17 | 20 | 23 | 24 |
| 1 | ● | | ● | ● | ● | | | | | | | | | | ● | | | | |
| 2 | ● | | ● | ● | ● | | | | | ● | | | | | ● | | | | |
| 3 | ● | | ● | ● | ● | | | | | ● | | | ● | | ● | | | | |
| 4 | ● | | ● | ● | ● | | | ● | | ● | | | ● | | ● | | | | |
| 5 | ● | | ● | ● | ● | | ● | ● | | ● | | | ● | | ● | | | | |
| 6 | ● | | ● | ● | ● | | ● | ● | | ● | | ● | ● | | ● | | | | |
| 7 | ● | | ● | ● | ● | | ● | ● | | ● | | | | ● | ● | | | | |
| 8 | ● | | ● | ● | ● | | ● | ● | | ● | | ● | | ● | ● | | | | |
| 9 | ● | | ● | ● | ● | | ● | ● | | ● | ● | ● | | ● | ● | | | | |
| 10 | ● | | ● | ● | ● | | | | ● | ● | | | | ● | ● | | | | |
| 11 | ● | | ● | ● | ● | | | | ● | ● | ● | ● | | ● | ● | | | | |
| 12 | ● | | ● | ● | ● | | ● | | ● | ● | ● | ● | | ● | ● | | | | |
| 13 | ● | | ● | ● | ● | | | | ● | ● | | | ● | ● | ● | | | | |
| 14 | ● | | ● | ● | ● | | | ● | ● | ● | | | ● | ● | ● | | | | |
| 15 | ● | | ● | ● | ● | | | ● | ● | ● | | ● | ● | ● | ● | | | | |
| ХП | ● | | ● | ● | ● | | ● | ● | ● | ● | ● | ● | ● | ● | ● | | | | |

Упрощенная схема работы трех секционного сцепа на "СП" соединении тяговых двигателей ( 4 двигателя последовательно)

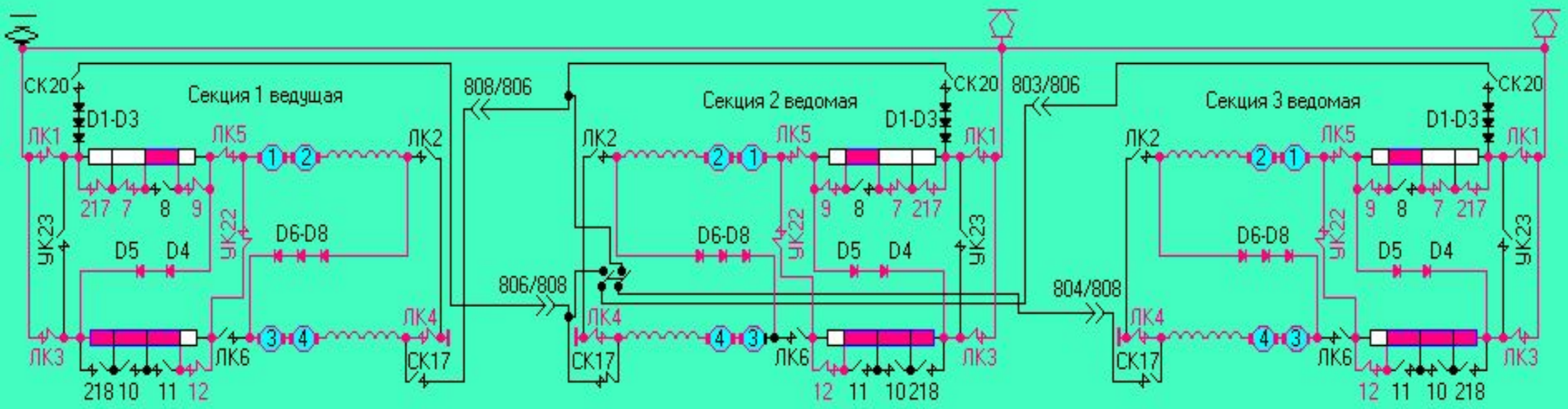


Порядок включения линейных (ЛК), реостатных (РК), уравнительных (УК) контакторов на "СП" соединении тяговых двигателей ( 4 двигателя последовательно)

| № | Линейные (ЛК) | | | | | | Реостатные (РК) | | | | | | | | | | | УК | |
|---|---|---|---|---|---|---|---|---|---|---|---|---|---|---|---|---|---|---|---|
| Поз | 1 | 2 | 3 | 4 | 5 | 6 | 217 | 7 | 8 | 9 | 218 | 10 | 11 | 12 | 22 | 17 | 20 | 23 | 24 |
| 1 | ● | | ● | ● | ● | | | | | | | | | | ● | | | | |
| 2 | ● | | ● | ● | ● | | | | | ● | | | | | ● | | | | |
| 3 | ● | | ● | ● | ● | | | | | ● | | | ● | | ● | | | | |
| 4 | ● | | ● | ● | ● | | | ● | | ● | | | ● | | ● | | | | |
| 5 | ● | | ● | ● | ● | | ● | ● | | ● | | | ● | | ● | | | | |
| 6 | ● | | ● | ● | ● | | ● | ● | | ● | | ● | ● | | ● | | | | |
| 7 | ● | | ● | ● | ● | | ● | ● | | ● | | | | ● | ● | | | | |
| 8 | ● | | ● | ● | ● | | ● | ● | | ● | | ● | | ● | ● | | | | |
| 9 | ● | | ● | ● | ● | | ● | ● | | ● | ● | ● | | ● | ● | | | | |
| 10 | ● | | ● | ● | ● | | | | ● | ● | | | | ● | ● | | | | |
| 11 | ● | | ● | ● | ● | | | | ● | ● | ● | ● | | ● | ● | | | | |
| 12 | ● | | ● | ● | ● | | ● | | ● | ● | ● | ● | | ● | ● | | | | |
| 13 | ● | | ● | ● | ● | | | | ● | ● | | | ● | ● | ● | | | | |
| 14 | ● | | ● | ● | ● | | | ● | ● | ● | | | ● | ● | ● | | | | |
| 15 | ● | | ● | ● | ● | | | ● | ● | ● | | ● | ● | ● | ● | | | | |
| ХП | ● | | ● | ● | ● | | ● | ● | ● | ● | ● | ● | ● | ● | ● | | | | |

Упрощенная схема работы трех секционного сцепа на "СП" соединении тяговых двигателей ( 4 двигателя последовательно)

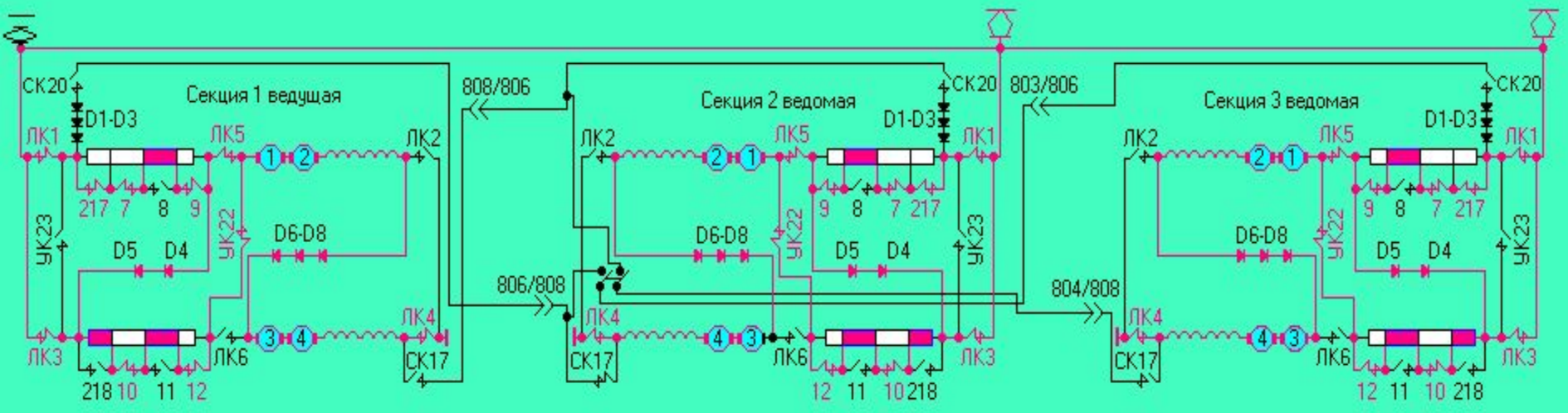


Порядок включения линейных (ЛК), реостатных (РК), уравнительных (УК) контакторов на "СП" соединении тяговых двигателей ( 4 двигателя последовательно)

| № | Линейные (ЛК) | | | | | | Реостатные (РК) | | | | | | | | | | | УК | |
|---|---|---|---|---|---|---|---|---|---|---|---|---|---|---|---|---|---|---|---|
| Поз | 1 | 2 | 3 | 4 | 5 | 6 | 217 | 7 | 8 | 9 | 218 | 10 | 11 | 12 | 22 | 17 | 20 | 23 | 24 |
| 1 | ● | | ● | ● | ● | | | | | | | | | | ● | | | | |
| 2 | ● | | ● | ● | ● | | | | | ● | | | | | ● | | | | |
| 3 | ● | | ● | ● | ● | | | | | ● | | | ● | | ● | | | | |
| 4 | ● | | ● | ● | ● | | | ● | | ● | | | ● | | ● | | | | |
| 5 | ● | | ● | ● | ● | | ● | ● | | ● | | | ● | | ● | | | | |
| 6 | ● | | ● | ● | ● | | ● | ● | | ● | | ● | ● | | ● | | | | |
| 7 | ● | | ● | ● | ● | | ● | ● | | ● | | | | ● | ● | | | | |
| 8 | ● | | ● | ● | ● | | ● | ● | | ● | | ● | | ● | ● | | | | |
| 9 | ● | | ● | ● | ● | | ● | ● | | ● | ● | ● | | ● | ● | | | | |
| 10 | ● | | ● | ● | ● | | | | ● | ● | | | | ● | ● | | | | |
| 11 | ● | | ● | ● | ● | | | | ● | ● | ● | ● | | ● | ● | | | | |
| 12 | ● | | ● | ● | ● | | ● | | ● | ● | ● | ● | | ● | ● | | | | |
| 13 | ● | | ● | ● | ● | | | | ● | ● | | | ● | ● | ● | | | | |
| 14 | ● | | ● | ● | ● | | | ● | ● | ● | | | ● | ● | ● | | | | |
| 15 | ● | | ● | ● | ● | | | ● | ● | ● | | ● | ● | ● | ● | | | | |
| ХП | ● | | ● | ● | ● | | ● | ● | ● | ● | ● | ● | ● | ● | ● | | | | |

Упрощенная схема работы трех секционного сцепа на "СП" соединении тяговых двигателей ( 4 двигателя последовательно)

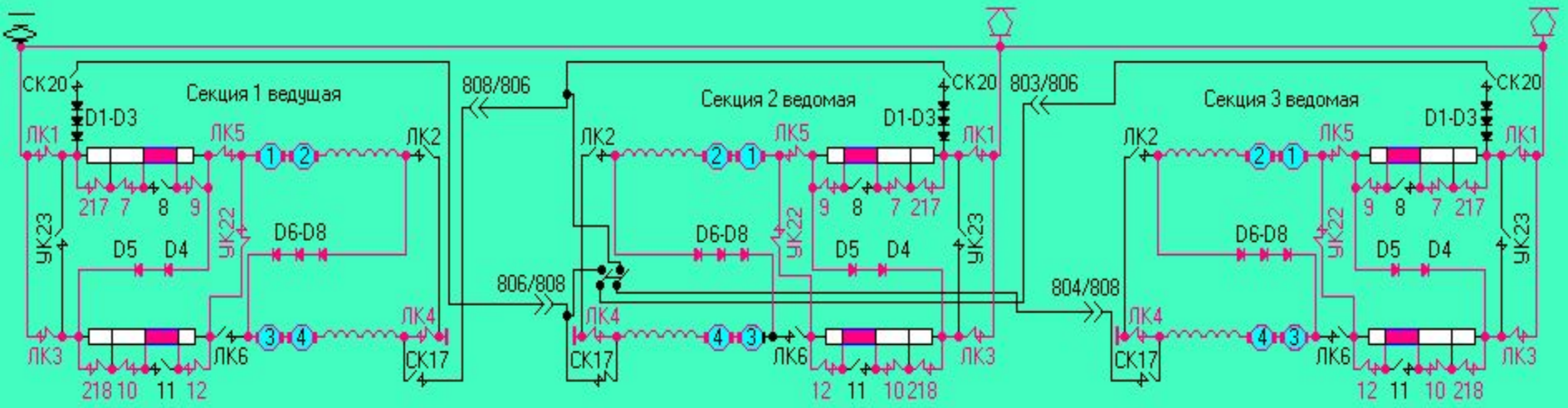


Порядок включения линейных (ЛК), реостатных (РК), уравнительных (УК) контакторов на "СП" соединении тяговых двигателей ( 4 двигателя последовательно)

| № | Линейные (ЛК) | | | | | | Реостатные (РК) | | | | | | | | | | | УК | |
|---|---|---|---|---|---|---|---|---|---|---|---|---|---|---|---|---|---|---|---|
| Поз | 1 | 2 | 3 | 4 | 5 | 6 | 217 | 7 | 8 | 9 | 218 | 10 | 11 | 12 | 22 | 17 | 20 | 23 | 24 |
| 1 | ● | | ● | ● | ● | | | | | | | | | | ● | | | | |
| 2 | ● | | ● | ● | ● | | | | | ● | | | | | ● | | | | |
| 3 | ● | | ● | ● | ● | | | | | ● | | | ● | | ● | | | | |
| 4 | ● | | ● | ● | ● | | | ● | | ● | | | ● | | ● | | | | |
| 5 | ● | | ● | ● | ● | | ● | ● | | ● | | | ● | | ● | | | | |
| 6 | ● | | ● | ● | ● | | ● | ● | | ● | | ● | ● | | ● | | | | |
| 7 | ● | | ● | ● | ● | | ● | ● | | ● | | | | ● | ● | | | | |
| 8 | ● | | ● | ● | ● | | ● | ● | | ● | | ● | | ● | ● | | | | |
| 9 | ● | | ● | ● | ● | | ● | ● | | ● | ● | ● | | ● | ● | | | | |
| 10 | ● | | ● | ● | ● | | | | ● | ● | | | | ● | ● | | | | |
| 11 | ● | | ● | ● | ● | | | | ● | ● | ● | ● | | ● | ● | | | | |
| 12 | ● | | ● | ● | ● | | ● | | ● | ● | ● | ● | | ● | ● | | | | |
| 13 | ● | | ● | ● | ● | | | | ● | ● | | | ● | ● | ● | | | | |
| 14 | ● | | ● | ● | ● | | | ● | ● | ● | | | ● | ● | ● | | | | |
| 15 | ● | | ● | ● | ● | | | ● | ● | ● | | ● | ● | ● | ● | | | | |
| ХП | ● | | ● | ● | ● | | ● | ● | ● | ● | ● | ● | ● | ● | ● | | | | |

Упрощенная схема работы трех секционного сцепа на "СП" соединении тяговых двигателей ( 4 двигателя последовательно)

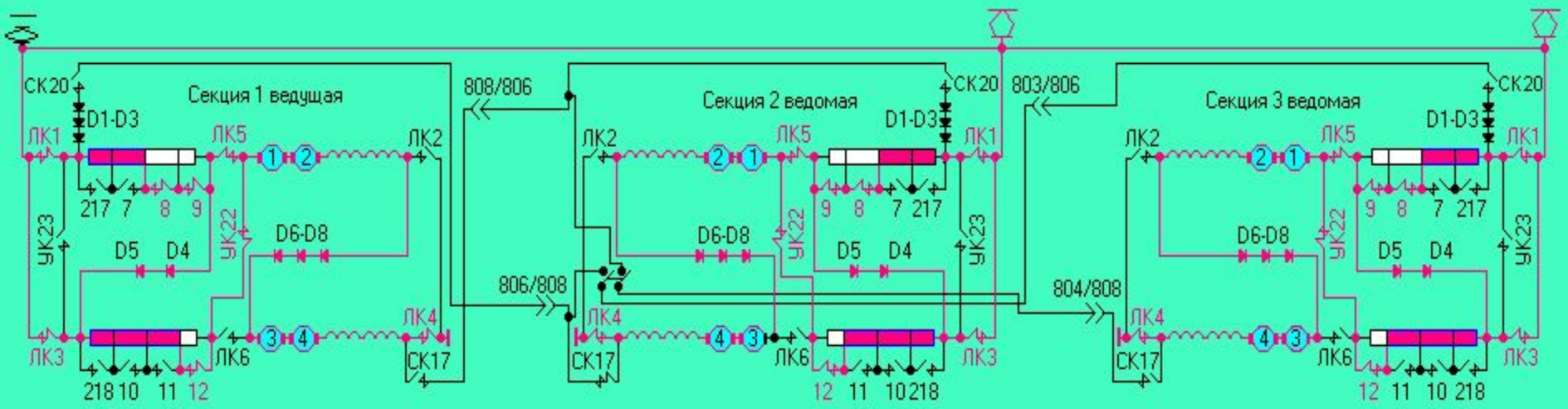


Порядок включения линейных (ЛК), реостатных (РК), уравнительных (УК) контакторов на "СП" соединении тяговых двигателей ( 4 двигателя последовательно)

| № | Линейные (ЛК) | | | | | | Реостатные (РК) | | | | | | | | | | | УК | |
|---|---|---|---|---|---|---|---|---|---|---|---|---|---|---|---|---|---|---|---|
| Поз | 1 | 2 | 3 | 4 | 5 | 6 | 217 | 7 | 8 | 9 | 218 | 10 | 11 | 12 | 22 | 17 | 20 | 23 | 24 |
| 1 | ● | | ● | ● | ● | | | | | | | | | | ● | | | | |
| 2 | ● | | ● | ● | ● | | | | | ● | | | | | ● | | | | |
| 3 | ● | | ● | ● | ● | | | | | ● | | | ● | | ● | | | | |
| 4 | ● | | ● | ● | ● | | | ● | | ● | | | ● | | ● | | | | |
| 5 | ● | | ● | ● | ● | | ● | ● | | ● | | | ● | | ● | | | | |
| 6 | ● | | ● | ● | ● | | ● | ● | | ● | | ● | ● | | ● | | | | |
| 7 | ● | | ● | ● | ● | | ● | ● | | ● | | | | ● | ● | | | | |
| 8 | ● | | ● | ● | ● | | ● | ● | | ● | | ● | | ● | ● | | | | |
| 9 | ● | | ● | ● | ● | | ● | ● | | ● | ● | ● | | ● | ● | | | | |
| 10 | ● | | ● | ● | ● | | | | ● | ● | | | | ● | ● | | | | |
| 11 | ● | | ● | ● | ● | | | | ● | ● | ● | ● | | ● | ● | | | | |
| 12 | ● | | ● | ● | ● | | ● | | ● | ● | ● | ● | | ● | ● | | | | |
| 13 | ● | | ● | ● | ● | | | | ● | ● | | | ● | ● | ● | | | | |
| 14 | ● | | ● | ● | ● | | | ● | ● | ● | | | ● | ● | ● | | | | |
| 15 | ● | | ● | ● | ● | | | ● | ● | ● | | ● | ● | ● | ● | | | | |
| ХП | ● | | ● | ● | ● | | ● | ● | ● | ● | ● | ● | ● | ● | ● | | | | |

Упрощенная схема работы трех секционного сцепа на "СП" соединении тяговых двигателей ( 4 двигателя последовательно)

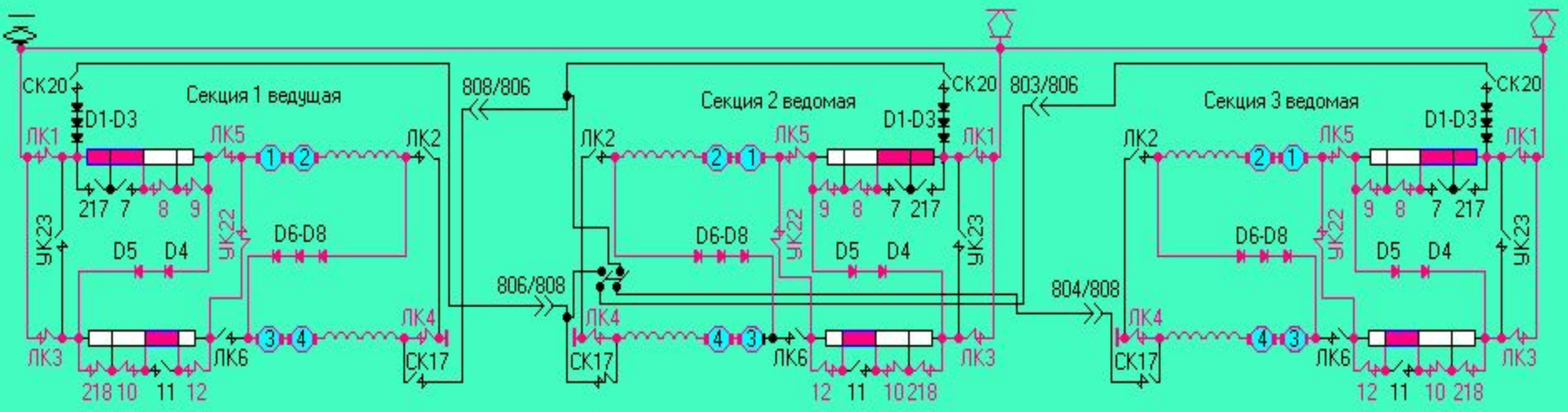


Порядок включения линейных (ЛК), реостатных (РК), уравнительных (УК) контакторов на "СП" соединении тяговых двигателей ( 4 двигателя последовательно)

| № | Линейные (ЛК) | | | | | | Реостатные (РК) | | | | | | | | | | | УК | |
|---|---|---|---|---|---|---|---|---|---|---|---|---|---|---|---|---|---|---|---|
| Поз | 1 | 2 | 3 | 4 | 5 | 6 | 217 | 7 | 8 | 9 | 218 | 10 | 11 | 12 | 22 | 17 | 20 | 23 | 24 |
| 1 | ● | | ● | ● | ● | | | | | | | | | | ● | | | | |
| 2 | ● | | ● | ● | ● | | | | | ● | | | | | ● | | | | |
| 3 | ● | | ● | ● | ● | | | | | ● | | | ● | | ● | | | | |
| 4 | ● | | ● | ● | ● | | | ● | | ● | | | ● | | ● | | | | |
| 5 | ● | | ● | ● | ● | | ● | ● | | ● | | | ● | | ● | | | | |
| 6 | ● | | ● | ● | ● | | ● | ● | | ● | | ● | ● | | ● | | | | |
| 7 | ● | | ● | ● | ● | | ● | ● | | ● | | | | ● | ● | | | | |
| 8 | ● | | ● | ● | ● | | ● | ● | | ● | | ● | | ● | ● | | | | |
| 9 | ● | | ● | ● | ● | | ● | ● | | ● | ● | ● | | ● | ● | | | | |
| 10 | ● | | ● | ● | ● | | | | ● | ● | | | | ● | ● | | | | |
| 11 | ● | | ● | ● | ● | | | | ● | ● | ● | ● | | ● | ● | | | | |
| 12 | ● | | ● | ● | ● | | ● | | ● | ● | ● | ● | | ● | ● | | | | |
| 13 | ● | | ● | ● | ● | | | | ● | ● | | | ● | ● | ● | | | | |
| 14 | ● | | ● | ● | ● | | | ● | ● | ● | | | ● | ● | ● | | | | |
| 15 | ● | | ● | ● | ● | | | ● | ● | ● | | ● | ● | ● | ● | | | | |
| ХП | ● | | ● | ● | ● | | ● | ● | ● | ● | ● | ● | ● | ● | ● | | | | |

Упрощенная схема работы трех секционного сцепа на "СП" соединении тяговых двигателей ( 4 двигателя последовательно)

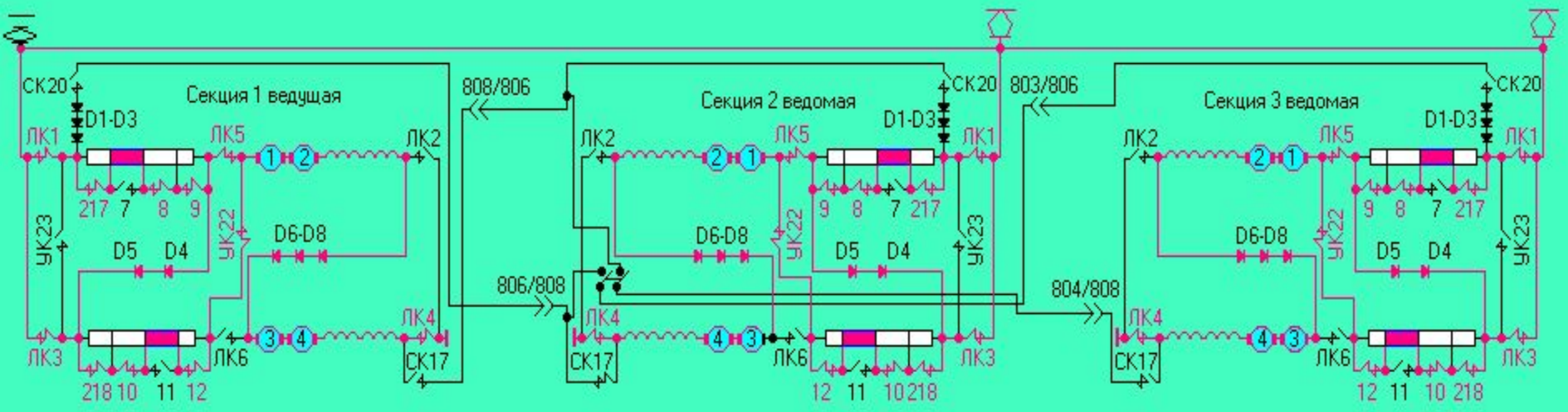


Порядок включения линейных (ЛК), реостатных (РК), уравнительных (УК) контакторов на "СП" соединении тяговых двигателей ( 4 двигателя последовательно)

| № | Линейные (ЛК) | | | | | | Реостатные (РК) | | | | | | | | | | | УК | |
|---|---|---|---|---|---|---|---|---|---|---|---|---|---|---|---|---|---|---|---|
| Поз | 1 | 2 | 3 | 4 | 5 | 6 | 217 | 7 | 8 | 9 | 218 | 10 | 11 | 12 | 22 | 17 | 20 | 23 | 24 |
| 1 | ● | | ● | ● | ● | | | | | | | | | | ● | | | | |
| 2 | ● | | ● | ● | ● | | | | | ● | | | | | ● | | | | |
| 3 | ● | | ● | ● | ● | | | | | ● | | | ● | | ● | | | | |
| 4 | ● | | ● | ● | ● | | | ● | | ● | | | ● | | ● | | | | |
| 5 | ● | | ● | ● | ● | | ● | ● | | ● | | | ● | | ● | | | | |
| 6 | ● | | ● | ● | ● | | ● | ● | | ● | | ● | ● | | ● | | | | |
| 7 | ● | | ● | ● | ● | | ● | ● | | ● | | | | ● | ● | | | | |
| 8 | ● | | ● | ● | ● | | ● | ● | | ● | | ● | | ● | ● | | | | |
| 9 | ● | | ● | ● | ● | | ● | ● | | ● | ● | ● | | ● | ● | | | | |
| 10 | ● | | ● | ● | ● | | | | ● | ● | | | | ● | ● | | | | |
| 11 | ● | | ● | ● | ● | | | | ● | ● | ● | ● | | ● | ● | | | | |
| 12 | ● | | ● | ● | ● | | ● | | ● | ● | ● | ● | | ● | ● | | | | |
| 13 | ● | | ● | ● | ● | | | | ● | ● | | | ● | ● | ● | | | | |
| 14 | ● | | ● | ● | ● | | | ● | ● | ● | | | ● | ● | ● | | | | |
| 15 | ● | | ● | ● | ● | | | ● | ● | ● | | ● | ● | ● | ● | | | | |
| ХП | ● | | ● | ● | ● | | ● | ● | ● | ● | ● | ● | ● | ● | ● | | | | |

Упрощенная схема работы трех секционного сцепа на "СП" соединении тяговых двигателей ( 4 двигателя последовательно)

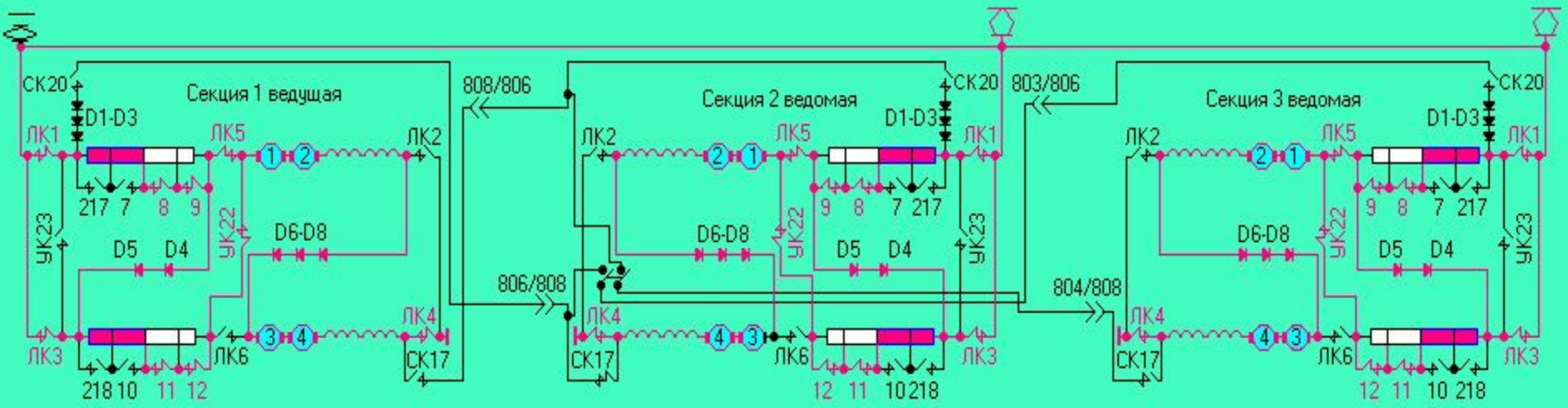


Порядок включения линейных (ЛК), реостатных (РК), уравнительных (УК) контакторов на "СП" соединении тяговых двигателей ( 4 двигателя последовательно)

| № | Линейные (ЛК) | | | | | | Реостатные (РК) | | | | | | | | | | | УК | |
|---|---|---|---|---|---|---|---|---|---|---|---|---|---|---|---|---|---|---|---|
| Поз | 1 | 2 | 3 | 4 | 5 | 6 | 217 | 7 | 8 | 9 | 218 | 10 | 11 | 12 | 22 | 17 | 20 | 23 | 24 |
| 1 | ● | | ● | ● | ● | | | | | | | | | | ● | | | | |
| 2 | ● | | ● | ● | ● | | | | | ● | | | | | ● | | | | |
| 3 | ● | | ● | ● | ● | | | | | ● | | | ● | | ● | | | | |
| 4 | ● | | ● | ● | ● | | | ● | | ● | | | ● | | ● | | | | |
| 5 | ● | | ● | ● | ● | | ● | ● | | ● | | | ● | | ● | | | | |
| 6 | ● | | ● | ● | ● | | ● | ● | | ● | | ● | ● | | ● | | | | |
| 7 | ● | | ● | ● | ● | | ● | ● | | ● | | | | ● | ● | | | | |
| 8 | ● | | ● | ● | ● | | ● | ● | | ● | | ● | | ● | ● | | | | |
| 9 | ● | | ● | ● | ● | | ● | ● | | ● | ● | ● | | ● | ● | | | | |
| 10 | ● | | ● | ● | ● | | | | ● | ● | | | | ● | ● | | | | |
| 11 | ● | | ● | ● | ● | | | | ● | ● | ● | ● | | ● | ● | | | | |
| 12 | ● | | ● | ● | ● | | ● | | ● | ● | ● | ● | | ● | ● | | | | |
| 13 | ● | | ● | ● | ● | | | | ● | ● | | | ● | ● | ● | | | | |
| 14 | ● | | ● | ● | ● | | | ● | ● | ● | | | ● | ● | ● | | | | |
| 15 | ● | | ● | ● | ● | | | ● | ● | ● | | ● | ● | ● | ● | | | | |
| ХП | ● | | ● | ● | ● | | ● | ● | ● | ● | ● | ● | ● | ● | ● | | | | |

Упрощенная схема работы трех секционного сцепа на "СП" соединении тяговых двигателей ( 4 двигателя последовательно)

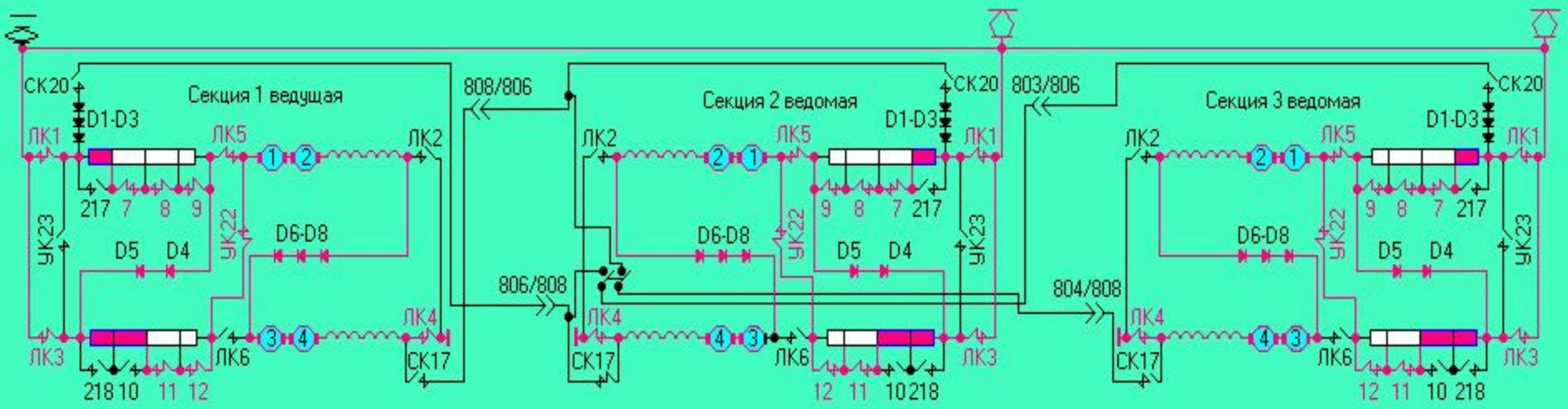


Порядок включения линейных (ЛК), реостатных (РК), уравнительных (УК) контакторов на "СП" соединении тяговых двигателей ( 4 двигателя последовательно)

| № | Линейные (ЛК) | | | | | | Реостатные (РК) | | | | | | | | | | | УК | |
|---|---|---|---|---|---|---|---|---|---|---|---|---|---|---|---|---|---|---|---|
| Поз | 1 | 2 | 3 | 4 | 5 | 6 | 217 | 7 | 8 | 9 | 218 | 10 | 11 | 12 | 22 | 17 | 20 | 23 | 24 |
| 1 | ● | | ● | ● | ● | | | | | | | | | | ● | | | | |
| 2 | ● | | ● | ● | ● | | | | | ● | | | | | ● | | | | |
| 3 | ● | | ● | ● | ● | | | | | ● | | | ● | | ● | | | | |
| 4 | ● | | ● | ● | ● | | | ● | | ● | | | ● | | ● | | | | |
| 5 | ● | | ● | ● | ● | | ● | ● | | ● | | | ● | | ● | | | | |
| 6 | ● | | ● | ● | ● | | ● | ● | | ● | | ● | ● | | ● | | | | |
| 7 | ● | | ● | ● | ● | | ● | ● | | ● | | | | ● | ● | | | | |
| 8 | ● | | ● | ● | ● | | ● | ● | | ● | | ● | | ● | ● | | | | |
| 9 | ● | | ● | ● | ● | | ● | ● | | ● | ● | ● | | ● | ● | | | | |
| 10 | ● | | ● | ● | ● | | | | ● | ● | | | | ● | ● | | | | |
| 11 | ● | | ● | ● | ● | | | | ● | ● | ● | ● | | ● | ● | | | | |
| 12 | ● | | ● | ● | ● | | ● | | ● | ● | ● | ● | | ● | ● | | | | |
| 13 | ● | | ● | ● | ● | | | | ● | ● | | | ● | ● | ● | | | | |
| 14 | ● | | ● | ● | ● | | | ● | ● | ● | | | ● | ● | ● | | | | |
| 15 | ● | | ● | ● | ● | | | ● | ● | ● | | ● | ● | ● | ● | | | | |
| ХП | ● | | ● | ● | ● | | ● | ● | ● | ● | ● | ● | ● | ● | ● | | | | |

Упрощенная схема работы трех секционного сцепа на "СП" соединении тяговых двигателей ( 4 двигателя последовательно)

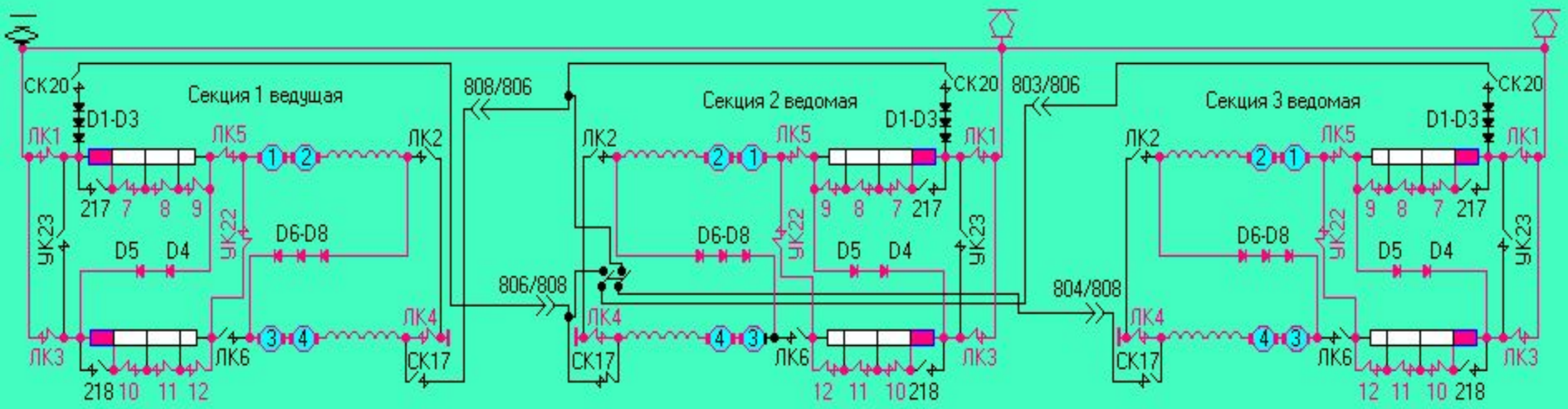


Порядок включения линейных (ЛК), реостатных (РК), уравнительных (УК) контакторов на "СП" соединении тяговых двигателей ( 4 двигателя последовательно)

| № | Линейные (ЛК) | | | | | | Реостатные (РК) | | | | | | | | | | | УК | |
|---|---|---|---|---|---|---|---|---|---|---|---|---|---|---|---|---|---|---|---|
| Поз | 1 | 2 | 3 | 4 | 5 | 6 | 217 | 7 | 8 | 9 | 218 | 10 | 11 | 12 | 22 | 17 | 20 | 23 | 24 |
| 1 | ● | | ● | ● | ● | | | | | | | | | | ● | | | | |
| 2 | ● | | ● | ● | ● | | | | | ● | | | | | ● | | | | |
| 3 | ● | | ● | ● | ● | | | | | ● | | | ● | | ● | | | | |
| 4 | ● | | ● | ● | ● | | | ● | | ● | | | ● | | ● | | | | |
| 5 | ● | | ● | ● | ● | | ● | ● | | ● | | | ● | | ● | | | | |
| 6 | ● | | ● | ● | ● | | ● | ● | | ● | | ● | ● | | ● | | | | |
| 7 | ● | | ● | ● | ● | | ● | ● | | ● | | | | ● | ● | | | | |
| 8 | ● | | ● | ● | ● | | ● | ● | | ● | | ● | | ● | ● | | | | |
| 9 | ● | | ● | ● | ● | | ● | ● | | ● | ● | ● | | ● | ● | | | | |
| 10 | ● | | ● | ● | ● | | | | ● | ● | | | | ● | ● | | | | |
| 11 | ● | | ● | ● | ● | | | | ● | ● | ● | ● | | ● | ● | | | | |
| 12 | ● | | ● | ● | ● | | ● | | ● | ● | ● | ● | | ● | ● | | | | |
| 13 | ● | | ● | ● | ● | | | | ● | ● | | | ● | ● | ● | | | | |
| 14 | ● | | ● | ● | ● | | | ● | ● | ● | | | ● | ● | ● | | | | |
| 15 | ● | | ● | ● | ● | | | ● | ● | ● | | ● | ● | ● | ● | | | | |
| ХП | ● | | ● | ● | ● | | ● | ● | ● | ● | ● | ● | ● | ● | ● | | | | |

Упрощенная схема работы трех секционного сцепа на "СП" соединении тяговых двигателей ( 4 двигателя последовательно)

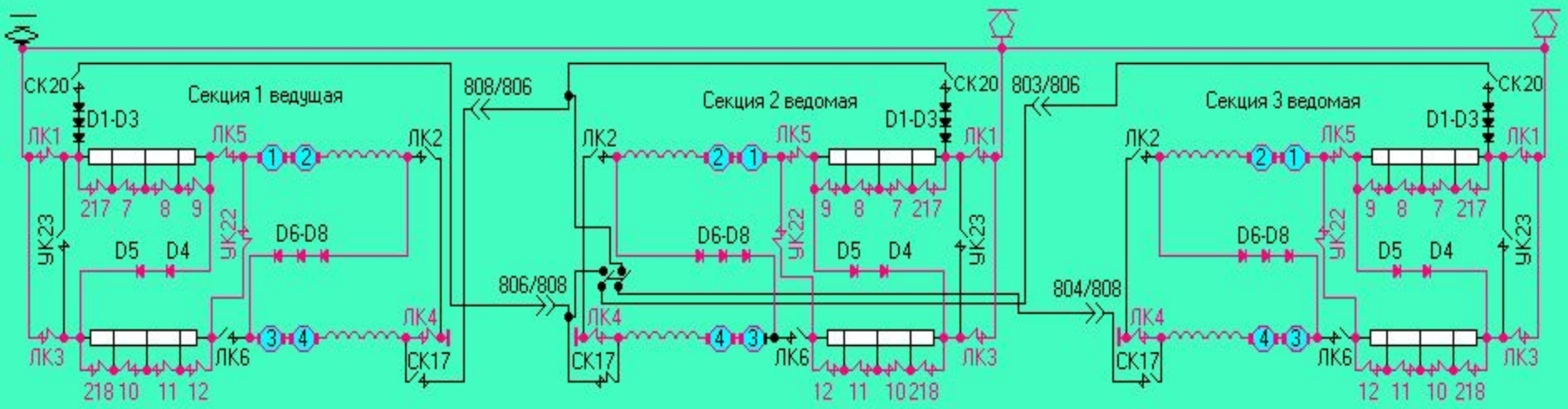


Порядок включения линейных (ЛК), реостатных (РК), уравнительных (УК) контакторов на "СП" соединении тяговых двигателей ( 4 двигателя последовательно)

| № | Линейные (ЛК) | | | | | | Реостатные (РК) | | | | | | | | | | | УК | |
|---|---|---|---|---|---|---|---|---|---|---|---|---|---|---|---|---|---|---|---|
| Поз | 1 | 2 | 3 | 4 | 5 | 6 | 217 | 7 | 8 | 9 | 218 | 10 | 11 | 12 | 22 | 17 | 20 | 23 | 24 |
| 1 | ● | | ● | ● | ● | | | | | | | | | | ● | | | | |
| 2 | ● | | ● | ● | ● | | | | | ● | | | | | ● | | | | |
| 3 | ● | | ● | ● | ● | | | | | ● | | | ● | | ● | | | | |
| 4 | ● | | ● | ● | ● | | | ● | | ● | | | ● | | ● | | | | |
| 5 | ● | | ● | ● | ● | | ● | ● | | ● | | | ● | | ● | | | | |
| 6 | ● | | ● | ● | ● | | ● | ● | | ● | | ● | ● | | ● | | | | |
| 7 | ● | | ● | ● | ● | | ● | ● | | ● | | | | ● | ● | | | | |
| 8 | ● | | ● | ● | ● | | ● | ● | | ● | | ● | | ● | ● | | | | |
| 9 | ● | | ● | ● | ● | | ● | ● | | ● | ● | ● | | ● | ● | | | | |
| 10 | ● | | ● | ● | ● | | | | ● | ● | | | | ● | ● | | | | |
| 11 | ● | | ● | ● | ● | | | | ● | ● | ● | ● | | ● | ● | | | | |
| 12 | ● | | ● | ● | ● | | ● | | ● | ● | ● | ● | | ● | ● | | | | |
| 13 | ● | | ● | ● | ● | | | | ● | ● | | | ● | ● | ● | | | | |
| 14 | ● | | ● | ● | ● | | | ● | ● | ● | | | ● | ● | ● | | | | |
| 15 | ● | | ● | ● | ● | | | ● | ● | ● | | ● | ● | ● | ● | | | | |
| ХП | ● | | ● | ● | ● | | ● | ● | ● | ● | ● | ● | ● | ● | ● | | | | |