MATLAB R2012a

File Edit Debug Desktop Window Help

Current Folder: C:\Users\student.ECAO2\Documents\MATLAB

Shortcuts How to Add What's New

Current Folder

« MATLAB ›

Name

.SimulinkProject

ТЭП

untitled.mdl

Details

Select a file to view details

Command Window

New to MATLAB? Watch this Video, see Demos, or read Getting Started.

fx >>

Workspace

Select data to...

Name Value

Command History

%-- 12.02.2019 13:46 --%

%-- 19.02.2019 14:26 --%

%-- 26.02.2019 13:40 --%

%-- 05.03.2019 13:49 --%

%-- 12.03.2019 13:36 --%

%-- 19.03.2019 13:46 --%

%-- 26.03.2019 13:33 --%

%-- 26.03.2019 14:33 --%

%-- 09.04.2019 13:31 --%

%-- 16.04.2019 13:32 --%

%-- 23.04.2019 13:46 --%

%-- 23.04.2019 14:41 --%

%-- 30.04.2019 13:40 --%

%-- 08.05.2019 17:11 --%

%-- 14.05.2019 13:47 --%

%-- 21.05.2019 13:49 --%

%-- 21.05.2019 15:42 --%

%-- 28.05.2019 13:33 --%

%-- 04.06.2019 12:58 --%

%-- 04.06.2019 14:21 --%

%-- 04.06.2019 14:30 --%

%-- 19.06.2019 13:03 --%

DPT_daten

%-- 03.09.2019 14:54 --%

Start Ready

OVR

MATLAB R2012a

EN 14:54

Simulink library browser

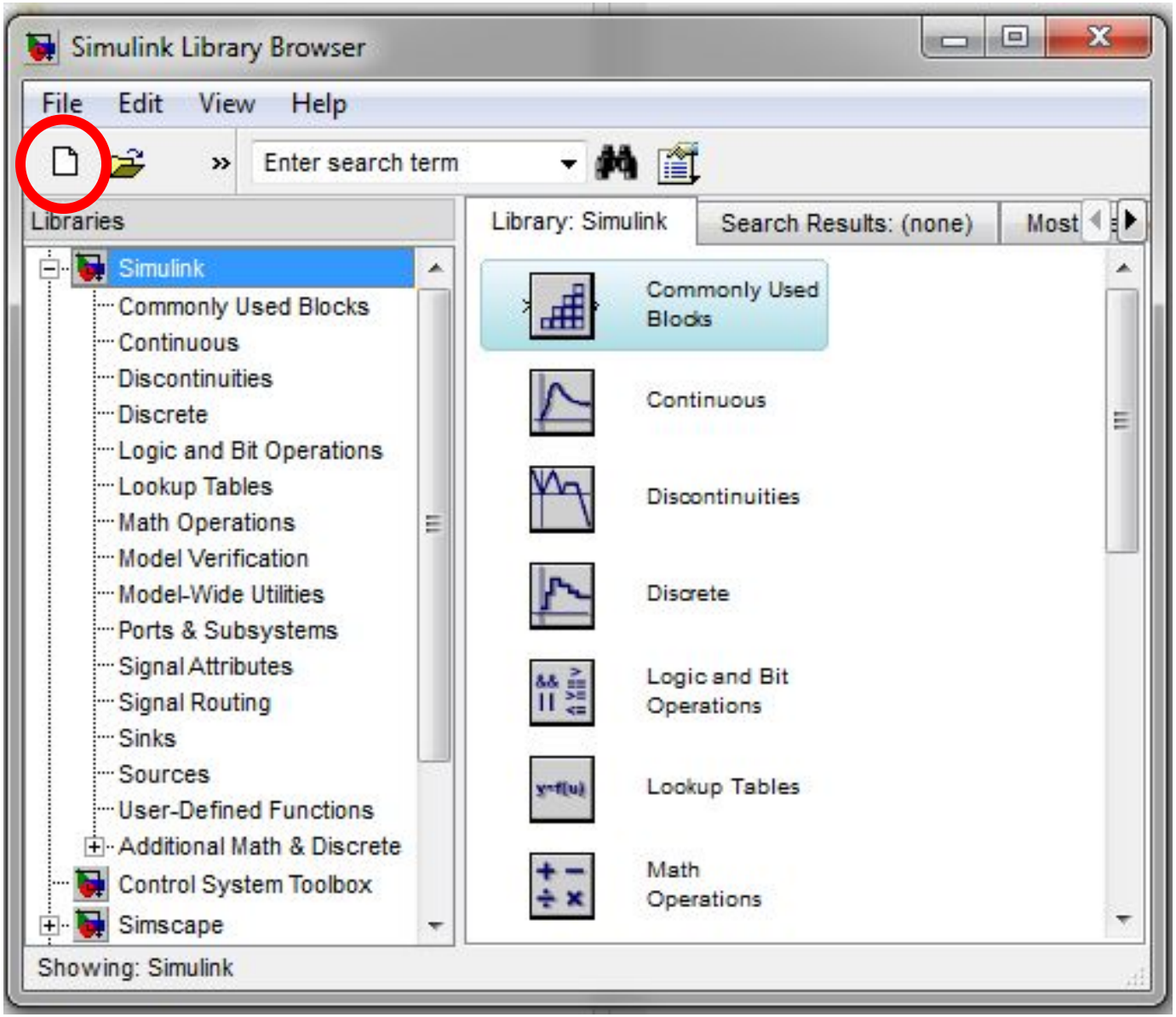
Simulink Library Browser
File
Edit
View
Help
Enter search term
Libraries
Library: Simulink
Search Results: (none)
Most
Simulink
Commonly Used Blocks
Continuous
Discontinuities
Discrete
Logic and Bit Operations
Lookup Tables
Math Operations
Model Verification
Model-Wide Utilities
Ports & Subsystems
Signal Attributes
Signal Routing
Sinks
Sources
User-Defined Functions
Additional Math & Discrete
Control System Toolbox
Simscape
Commonly Used Blocks
Continuous
Discontinuities
Discrete
Logic and Bit Operations
Lookup Tables
Math Operations
Showing: Simulink

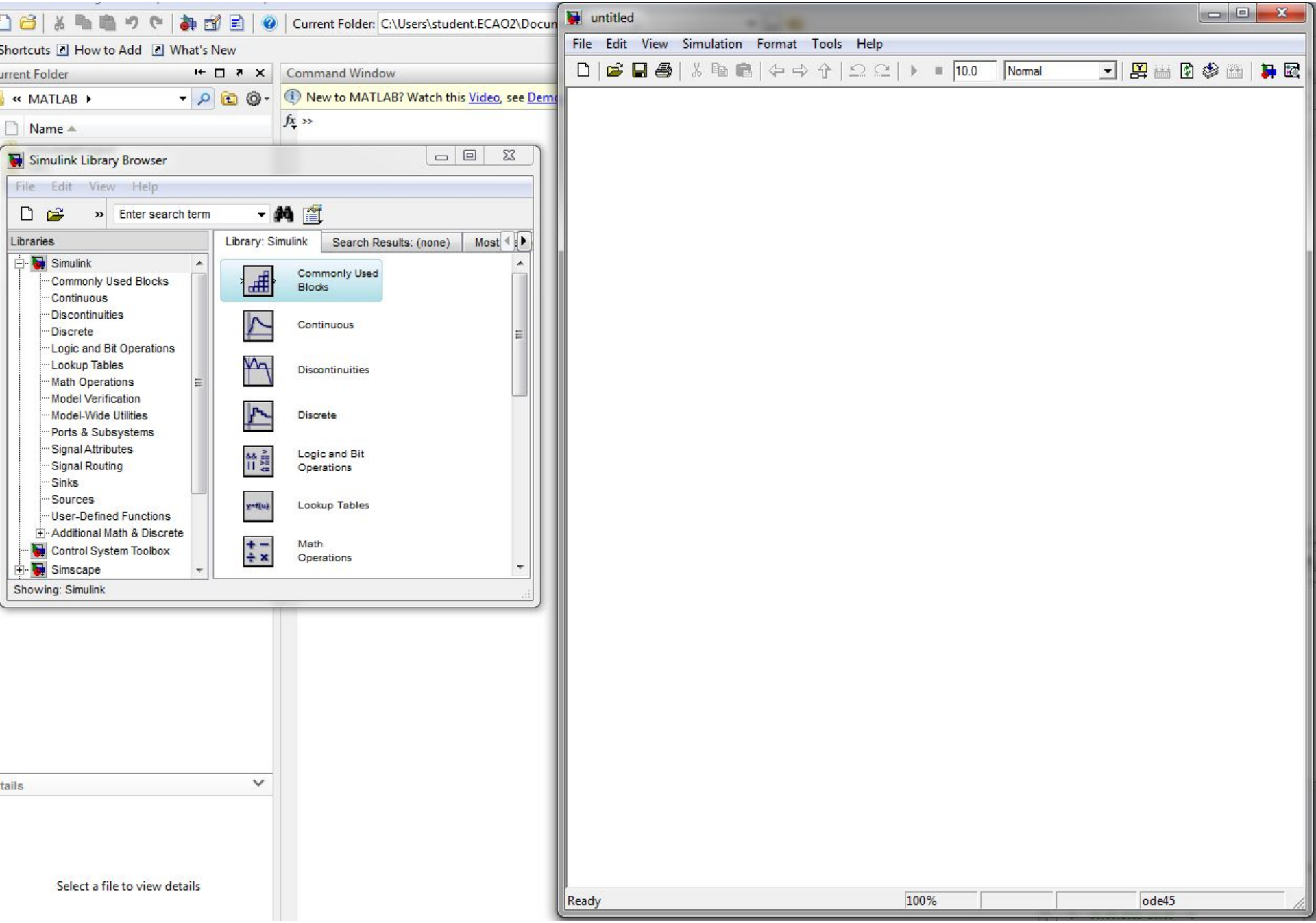
Current Folder: C:\Users\student.ECAO2\Docu
Shortcuts How to Add What's New
urrent Folder
MATLAB
Name
Command Window
New to MATLAB? Watch this Video, see Demo
Simulink Library Browser
File Edit View Help
Enter search term
Libraries
Simulink
Commonly Used Blocks
Continuous
Discontinuities
Discrete
Logic and Bit Operations
Lookup Tables
Math Operations
Model Verification
Model-Wide Utilities
Ports & Subsystems
Signal Attributes
Signal Routing
Sinks
Sources
User-Defined Functions
Additional Math & Discrete
Control System Toolbox
Simscape
Library: Simulink
Search Results: (none)
Most
Commonly Used Blocks
Continuous
Discontinuities
Discrete
Logic and Bit Operations
Lookup Tables
Math Operations
Showing: Simulink
tails
Select a file to view details
untitled
File Edit View Simulation Format Tools Help
10.0
Normal
Ready
100%
ode45

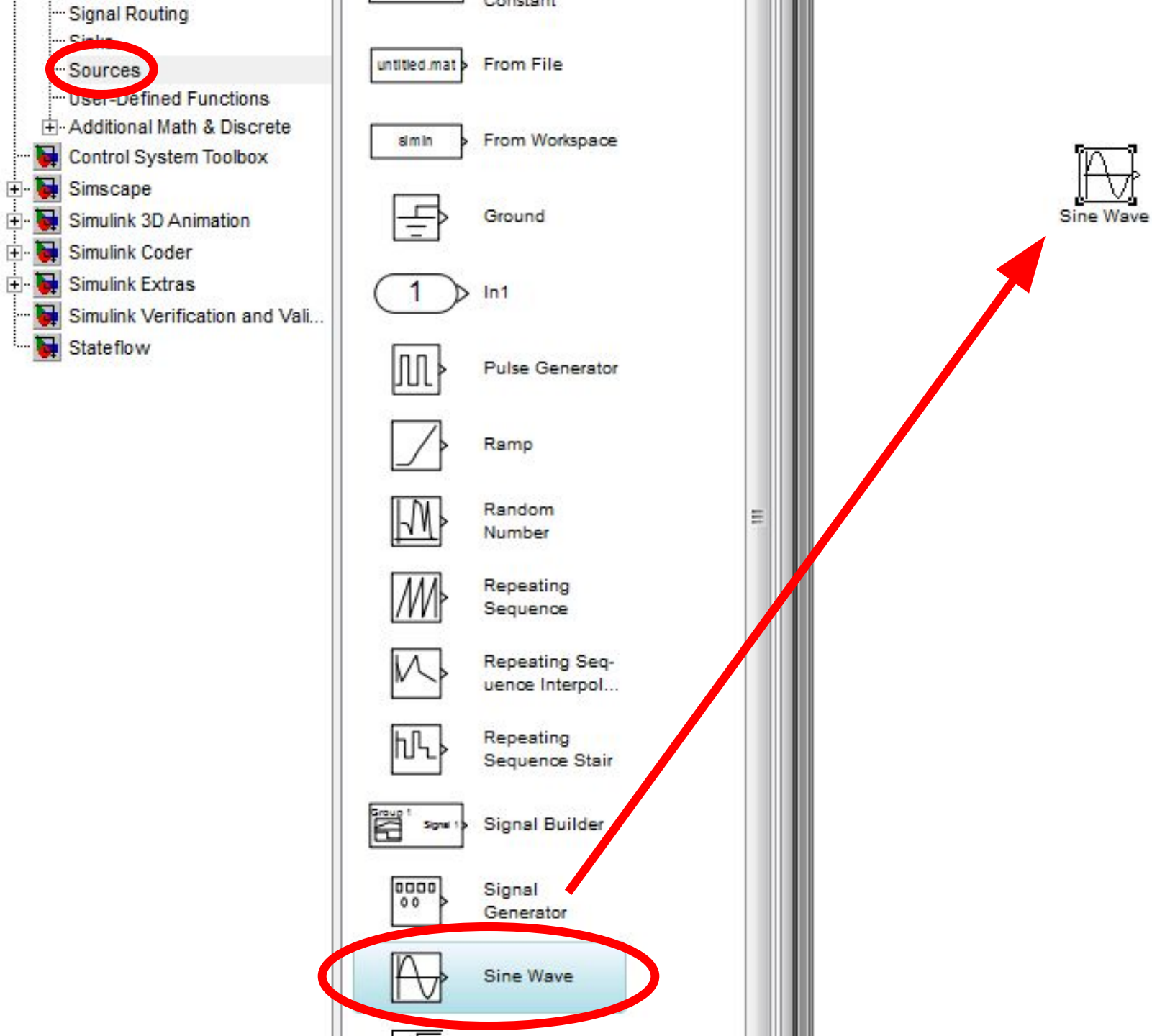
Signal Routing
Sinks
Sources
User-Defined Functions
Additional Math & Discrete
Control System Toolbox
Simscape
Simulink 3D Animation
Simulink Coder
Simulink Extras
Simulink Verification and Vali...
Stateflow
Constant
untitled.mat
From File
simin
From Workspace
Ground
1
In1
Pulse Generator
Ramp
Random Number
Repeating Sequence
Repeating Seq-uence Interpol...
Repeating Sequence Stair
Signal Builder
Signal Generator
Sine Wave
Sine Wave

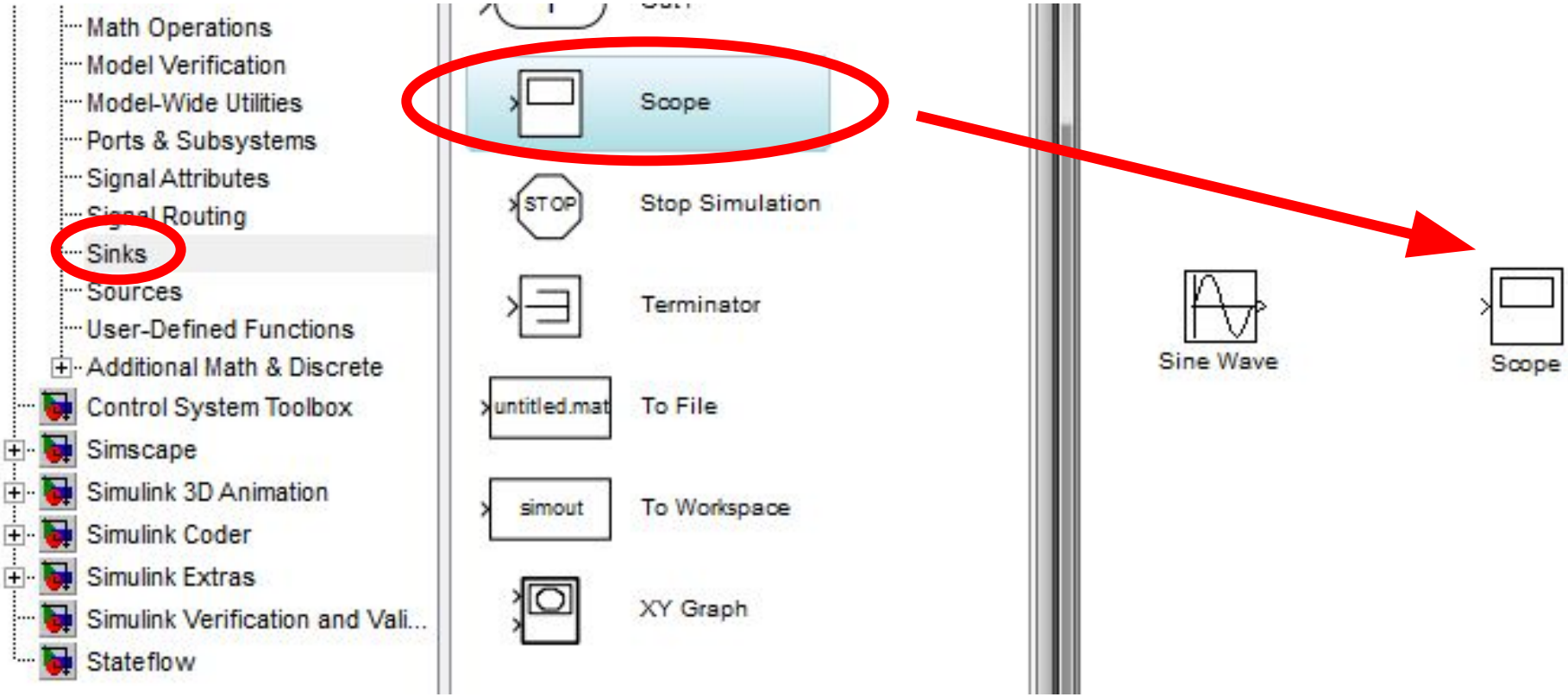
Math Operations
Model Verification
Model-Wide Utilities
Ports & Subsystems
Signal Attributes
Signal Routing
Sinks
Sources
User-Defined Functions
Additional Math & Discrete
Control System Toolbox
Simscape
Simulink 3D Animation
Simulink Coder
Simulink Extras
Simulink Verification and Vali...
Stateflow
Scope
STOP
Stop Simulation
Terminator
untitled.mat
To File
simout
To Workspace
XY Graph
Sine Wave
Scope

ulation
Format
Tools
Help
10.0
Normal

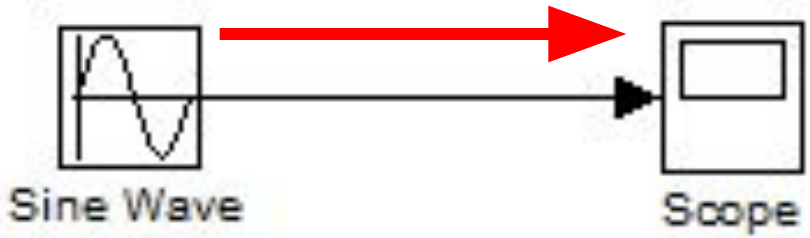
Sine Wave
Scope

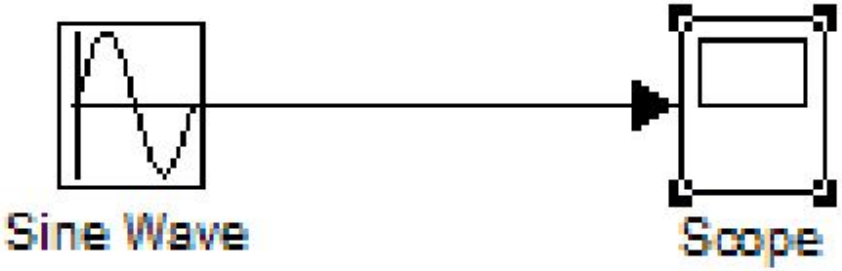
Sine Wave
Scope

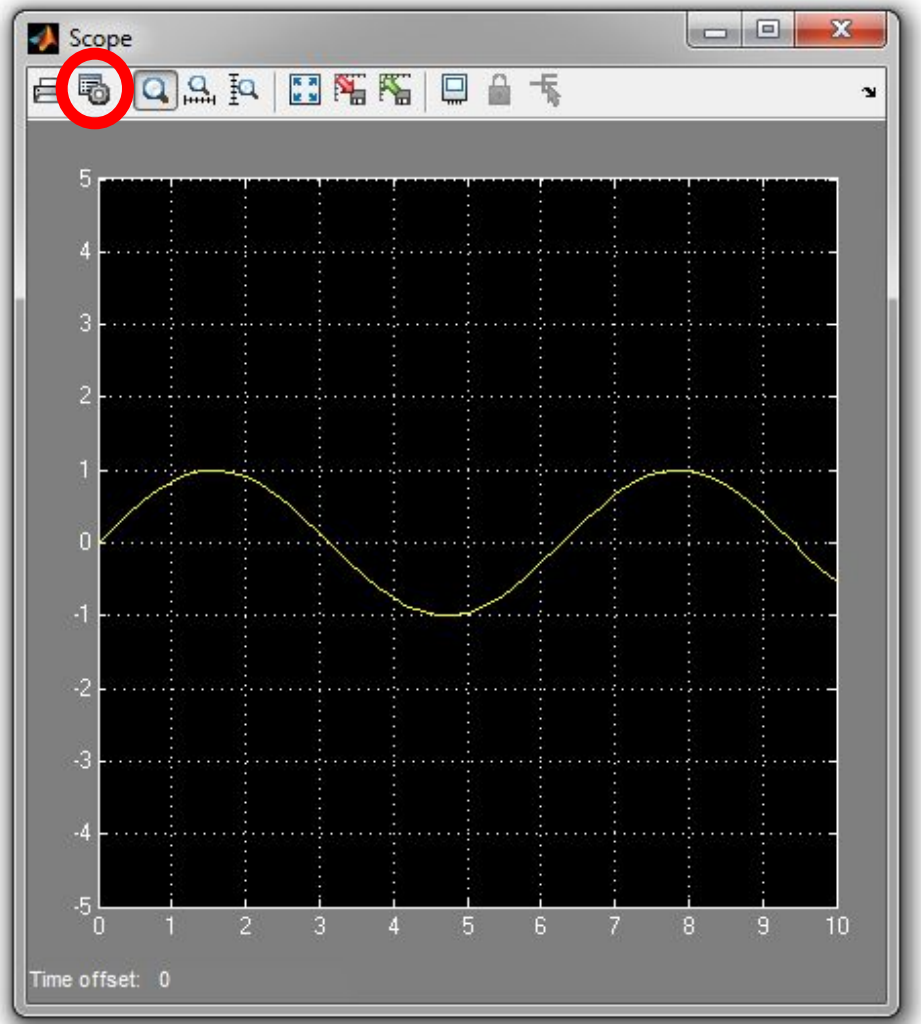
Scope
5
4
3
2
1
0
-1
-2
-3
-4
-5
0
1
2
3
4
5
6
7
8
9
10
Time offset: 0

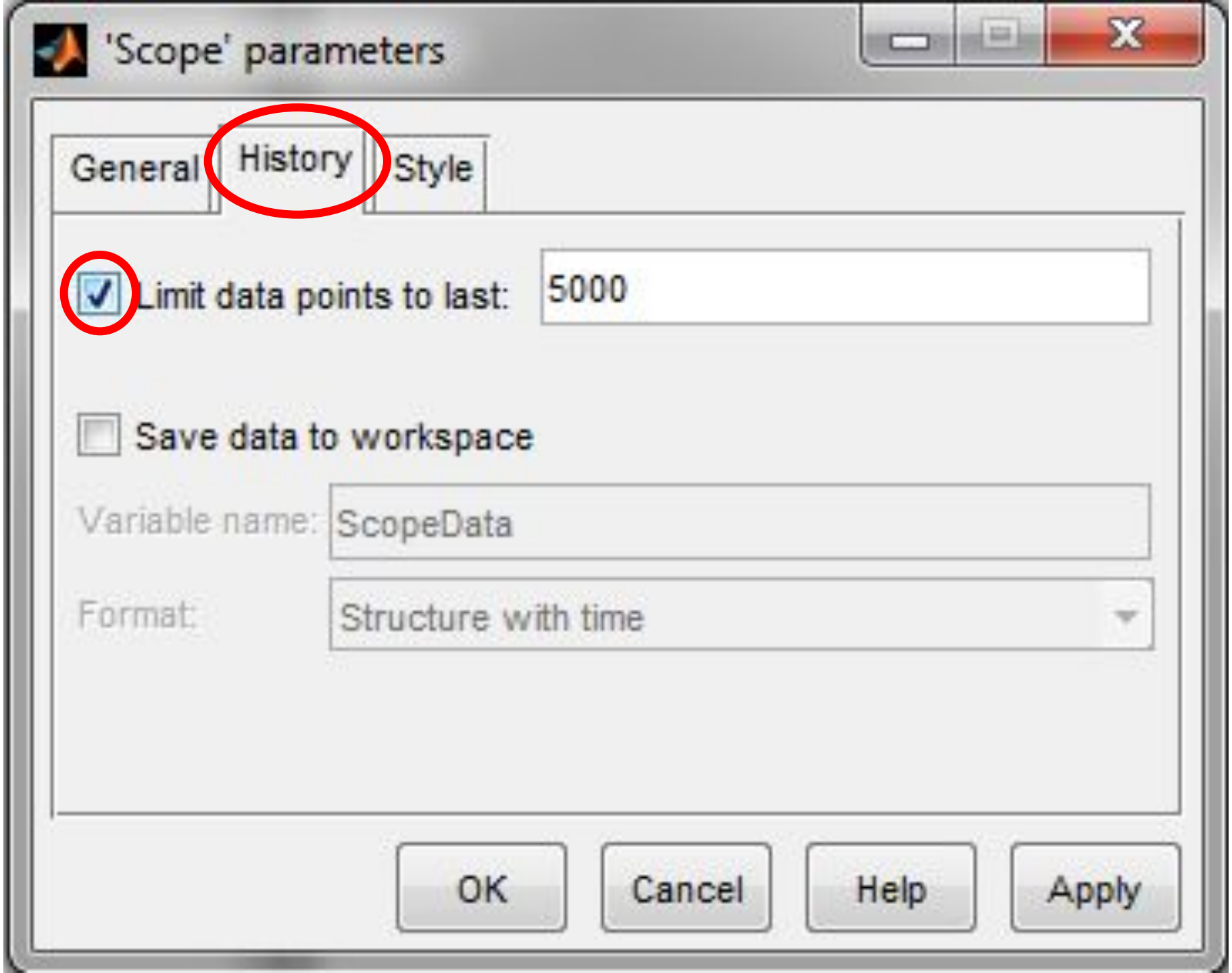
'Scope' parameters
General
History
Style
Limit data points to last:
5000
Save data to workspace
Variable name:
ScopeData
Format:
Structure with time
OK
Cancel
Help
Apply

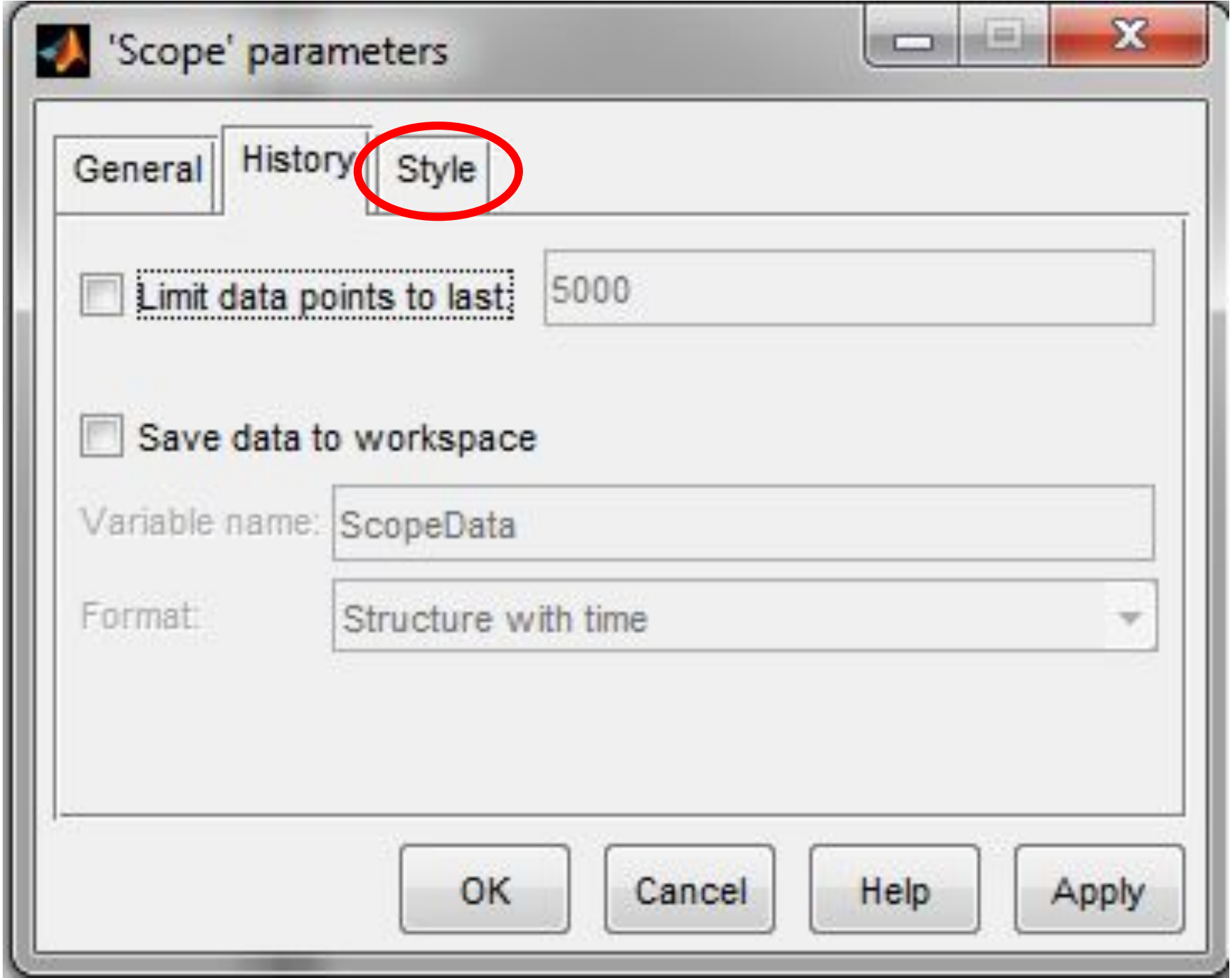
'Scope' parameters
General
History
Style
Limit data points to last:
5000
Save data to workspace
Variable name:
ScopeData
Format:
Structure with time
OK
Cancel
Help
Apply

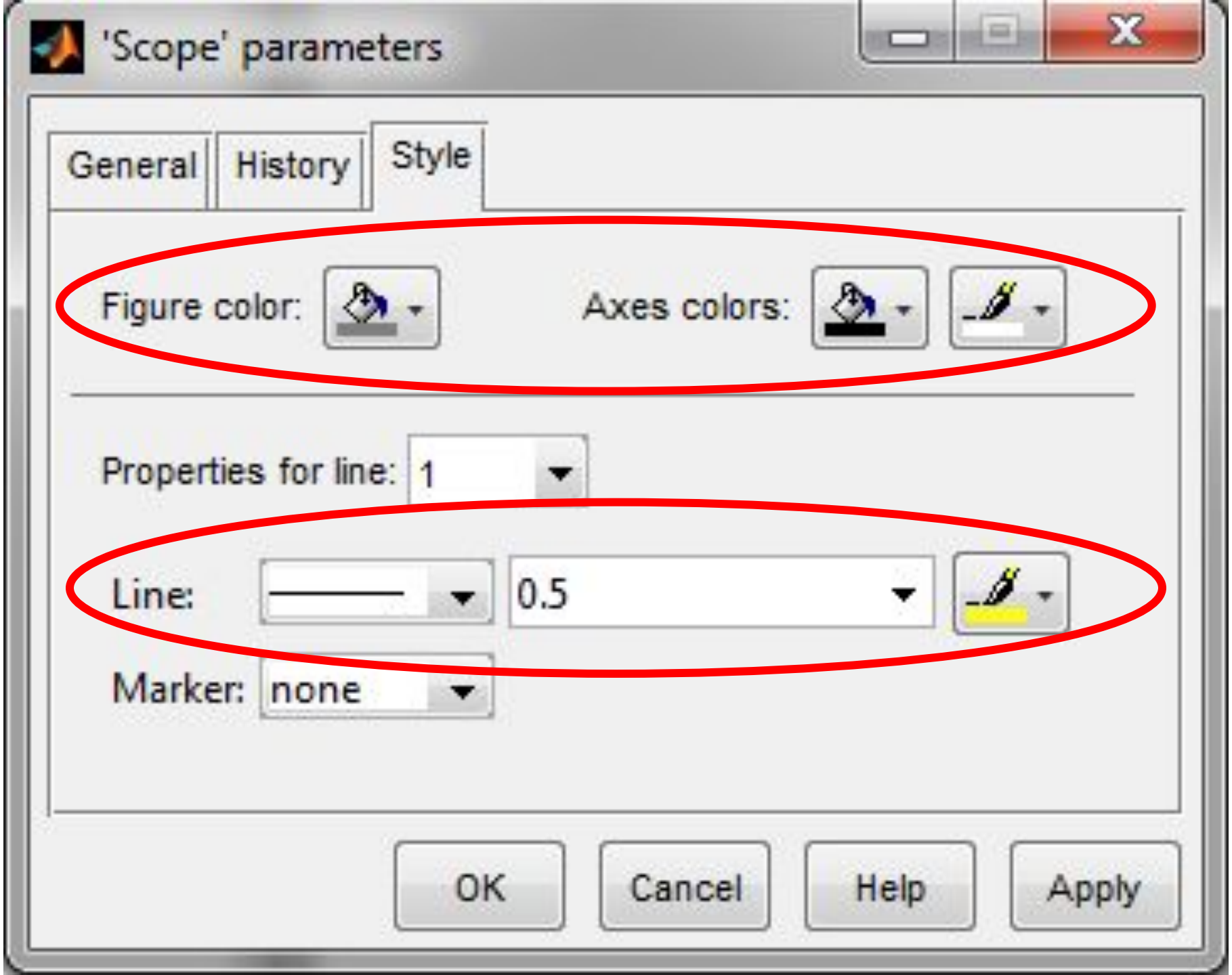
'Scope' parameters
General
History
Style
Figure color:
Axes colors:
Properties for line:
1
Line:
0.5
Marker:
none
OK
Cancel
Help
Apply

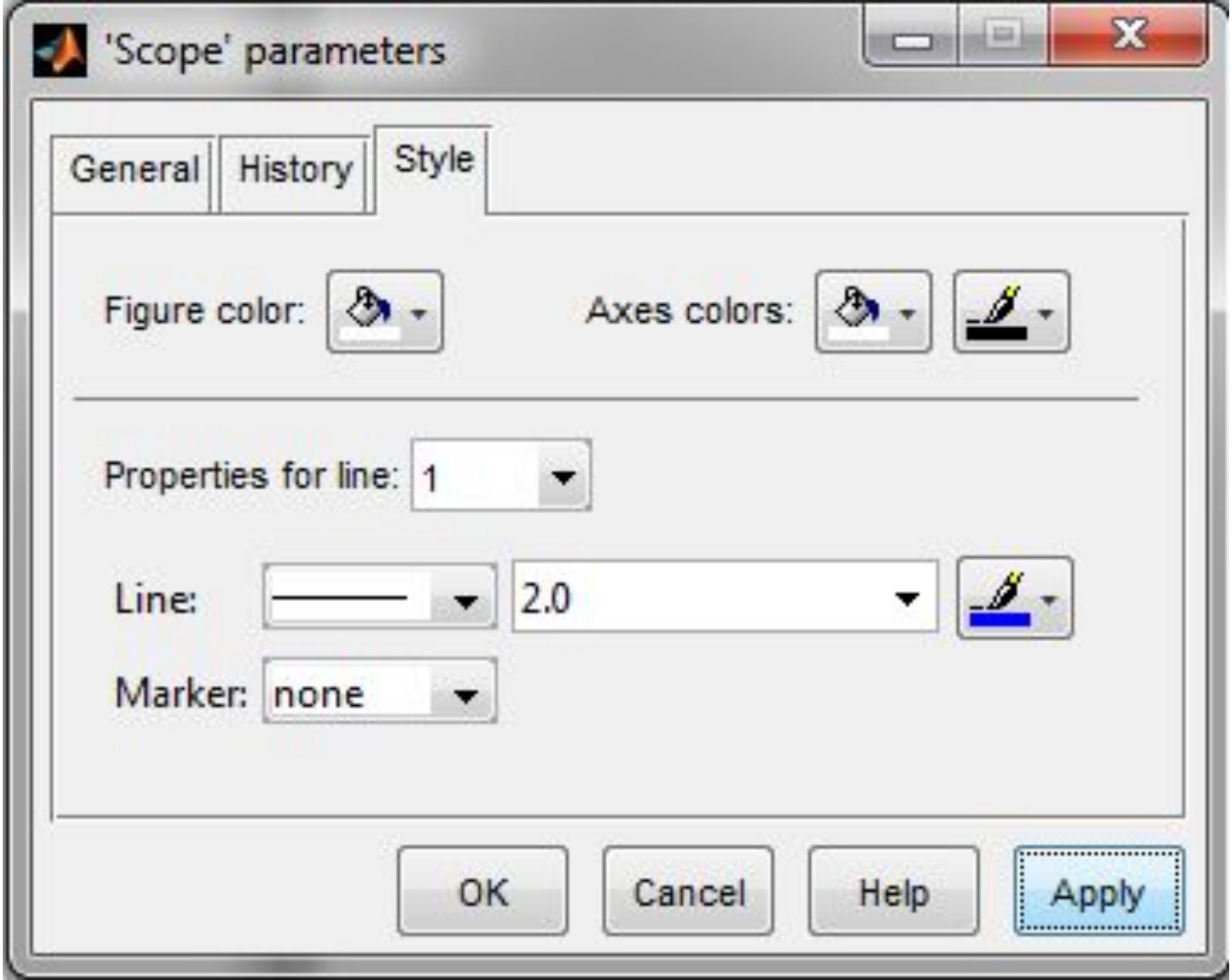
'Scope' parameters
General
History
Style
Figure color:
Axes colors:
Properties for line:
1
Line:
2.0
Marker:
none
OK
Cancel
Help
Apply

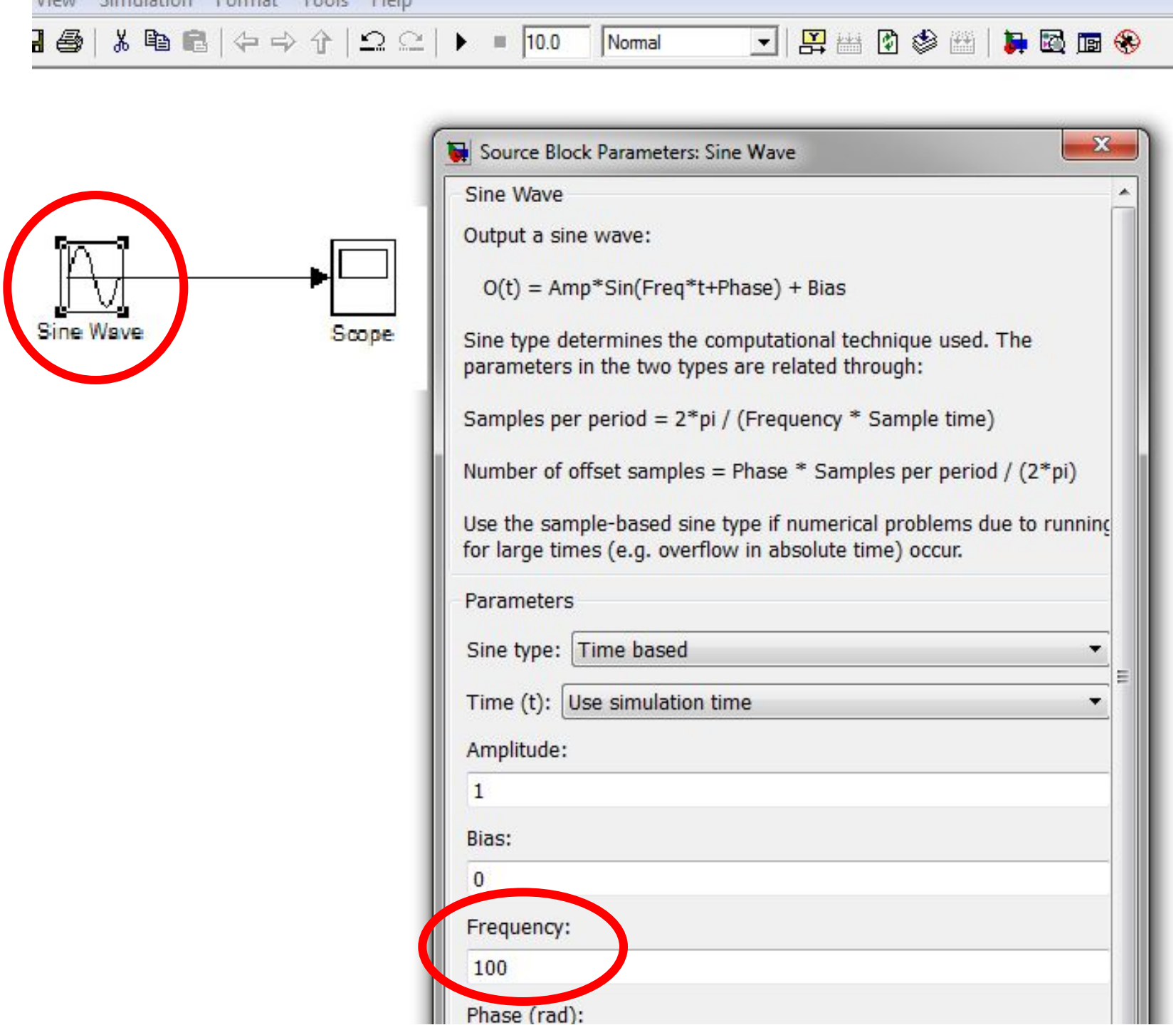
View Simulation Format Tools Help
10.0
Normal
Sine Wave
Scope
Source Block Parameters: Sine Wave
Sine Wave
Output a sine wave:
O(t) = Amp*Sin(Freq*t+Phase) + Bias
Sine type determines the computational technique used. The parameters in the two types are related through:
Samples per period = 2*pi / (Frequency * Sample time)
Number of offset samples = Phase * Samples per period / (2*pi)
Use the sample-based sine type if numerical problems due to running for large times (e.g. overflow in absolute time) occur.
Parameters
Sine type: Time based
Time (t): Use simulation time
Amplitude:
1
Bias:
0
Frequency:
100
Phase (rad):

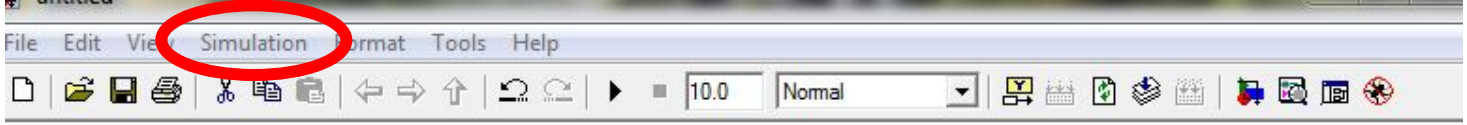
File Edit View Simulation Format Tools Help
10.0
Normal

Sine Wave
Scope

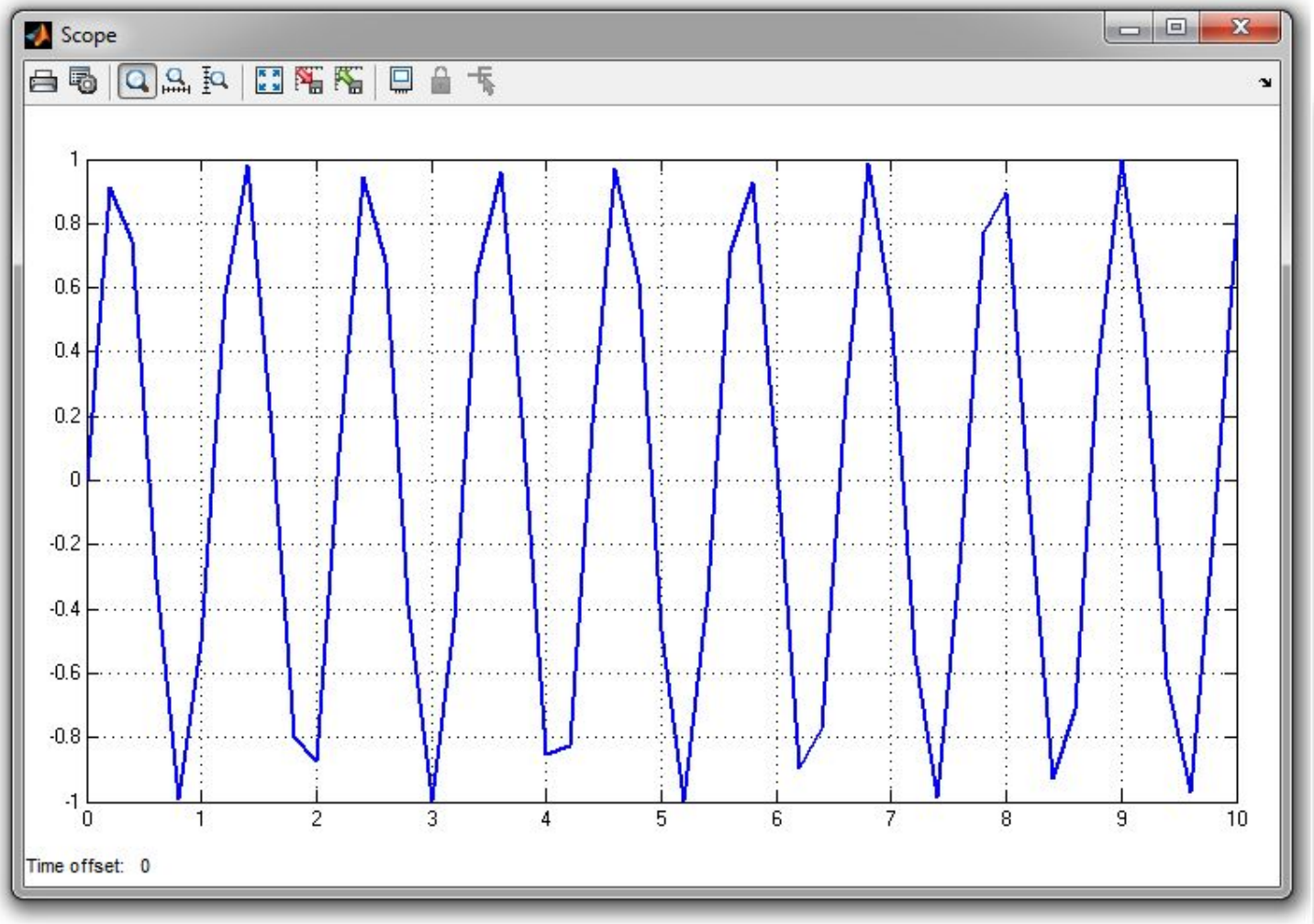
Scope
1
0.8
0.6
0.4
0.2
0
-0.2
-0.4
-0.6
-0.8
-1
0 1 2 3 4 5 6 7 8 9 10
Time offset: 0

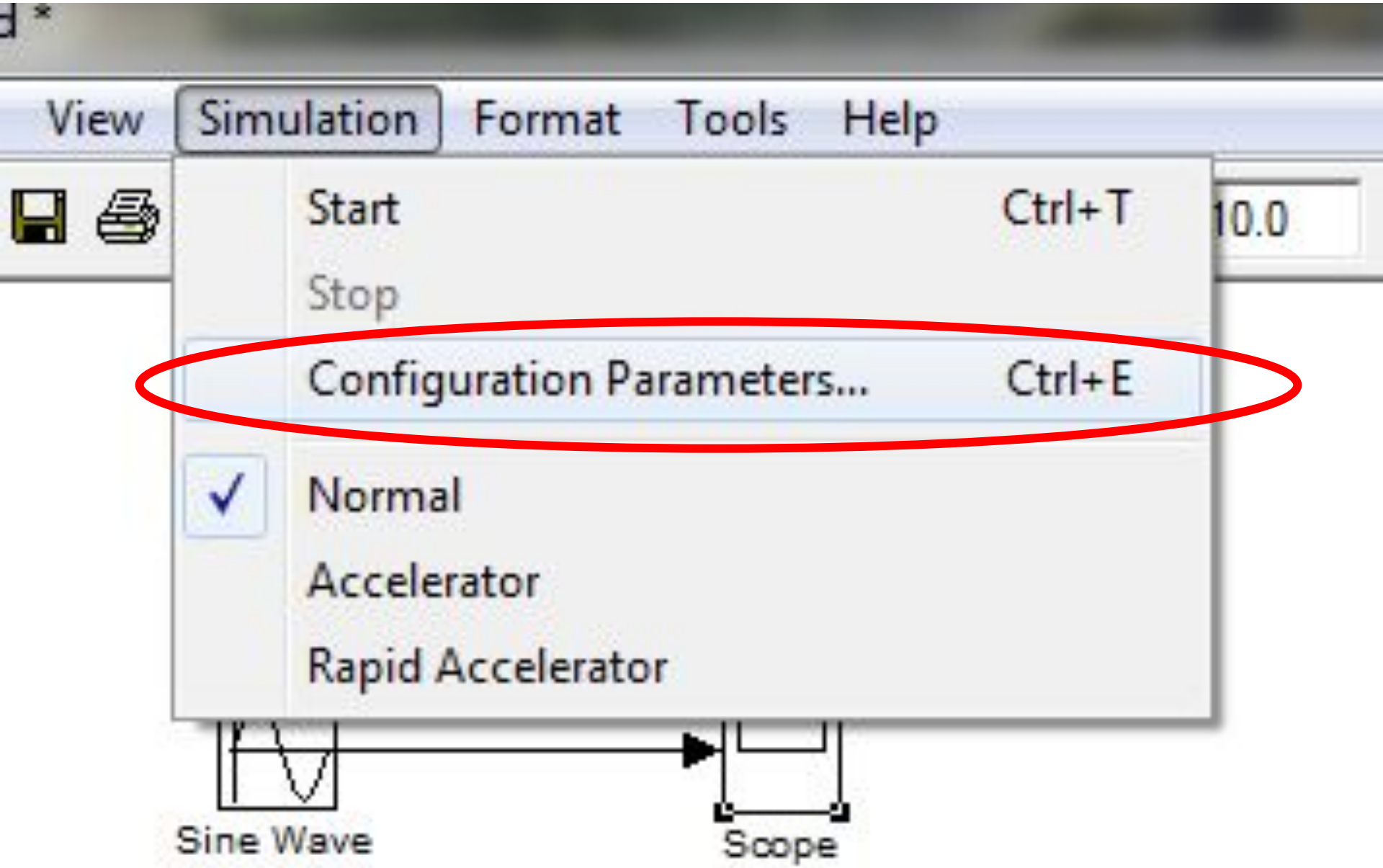
View
Simulation
Format
Tools
Help
10.0
Start Ctrl+T
Stop
Configuration Parameters... Ctrl+E
Normal
Accelerator
Rapid Accelerator
Sine Wave
Scope

Configuration Parameters: untitled/Configuration (Active)

Select:
- Solver
- Data Import/Export
- Optimization
- Diagnostics
- Hardware Implementation
- Model Referencing
- Simulation Target

Simulation time

Start time: 0.0 Stop time: 10.0

Solver options

Type: Variable-step Solver: ode45 (Dormand-Prince)

Max step size: auto Relative tolerance: 1e-3

Min step size: auto Absolute tolerance: auto

Maximum step size for variable-step solver.

Initial step size: auto Shape preservation: Disable All

Number of consecutive min steps: 1

Tasking and sample time options

Tasking mode for periodic sample times: Auto

☐ Automatically handle rate transition for data transfer

☐ Higher priority value indicates higher task priority

Zero-crossing options

Zero-crossing control: Use local settings Algorithm: Nonadaptive

Time tolerance: 10*128*eps Signal threshold: auto

Number of consecutive zero crossings: 1000

OK Cancel Help Apply

Simulation time

Start time: 0.0 Stop time: 10.0

Solver options

Type: Variable-step Solver: ode45 (Dormand-Prince)

Max step size: 1/10000 Relative tolerance: 1e-3

Min step size: auto Absolute tolerance: auto

Initial step size: auto Shape preservation: Disable All

Number of consecutive min steps: 1

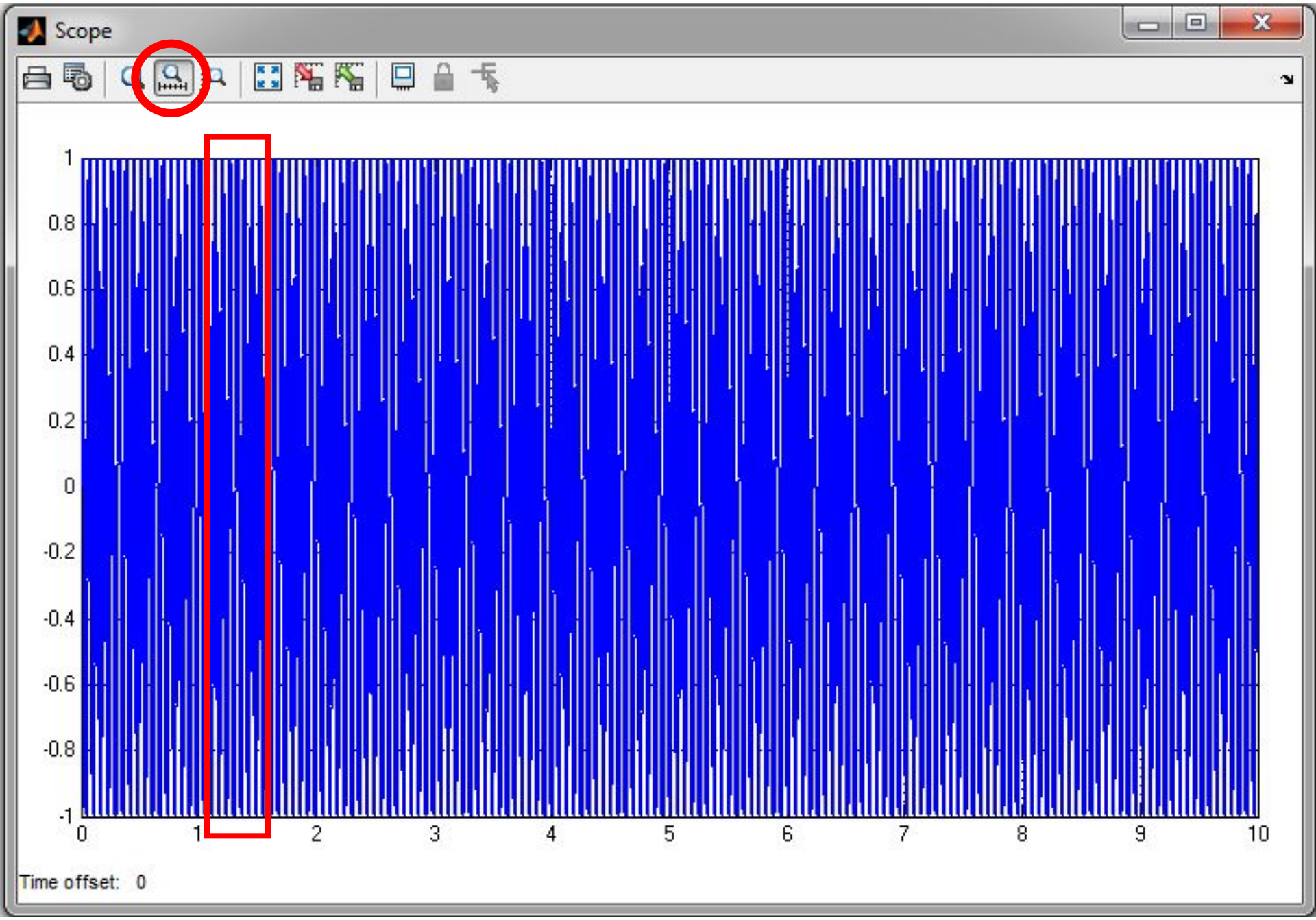
Scope
1
0.8
0.6
0.4
0.2
0
-0.2
-0.4
-0.6
-0.8
-1
0
1
2
3
4
5
6
7
8
9
10
Time offset: 0

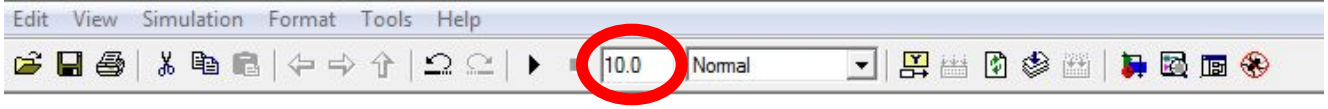
Edit View Simulation Format Tools Help
10.0
Normal

0.5

Sine Wave
Scope

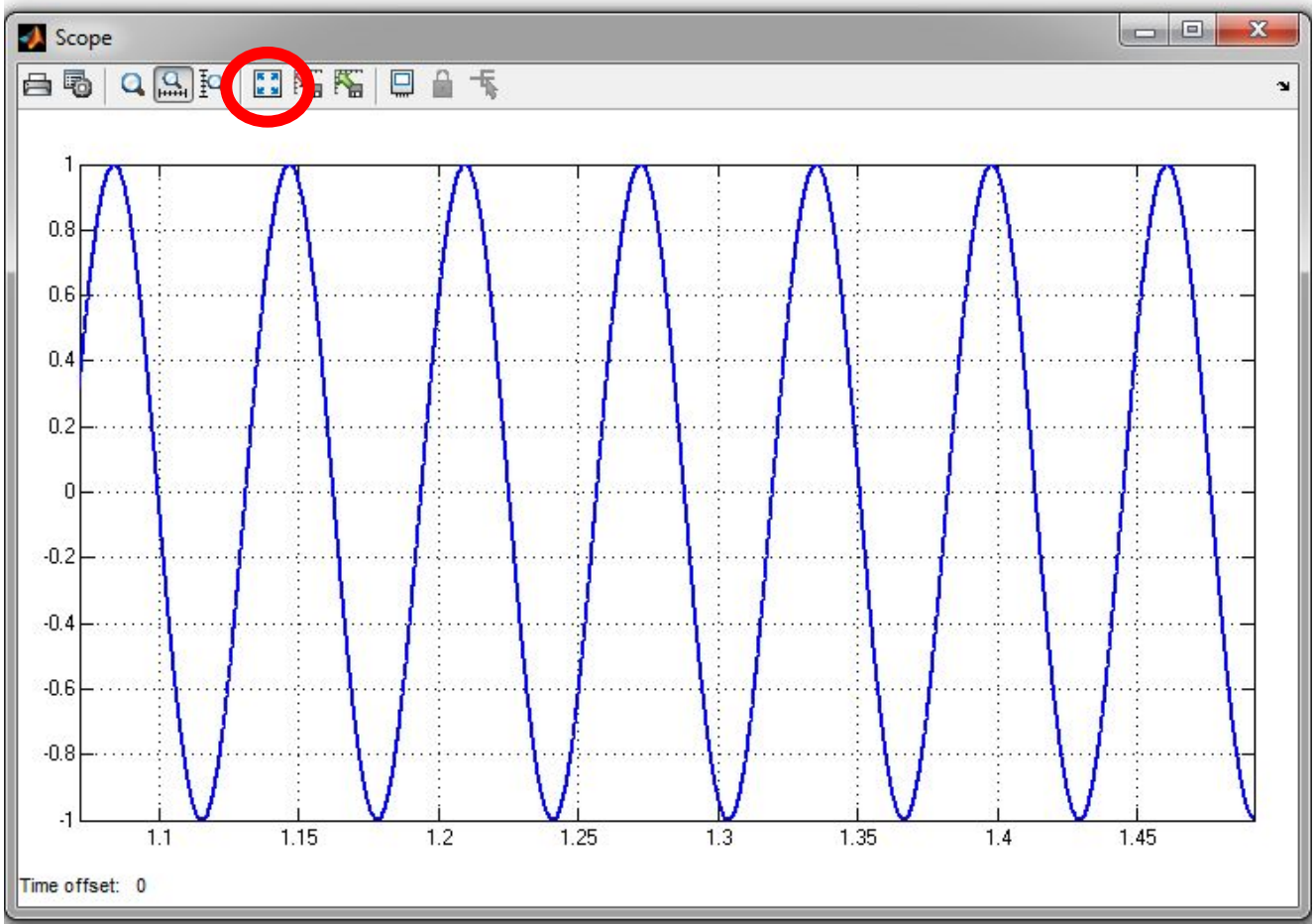
Scope
1
0.8
0.6
0.4
0.2
0
-0.2
-0.4
-0.6
-0.8
-1
1.1
1.15
1.2
1.25
1.3
1.35
1.4
1.45
Time offset: 0

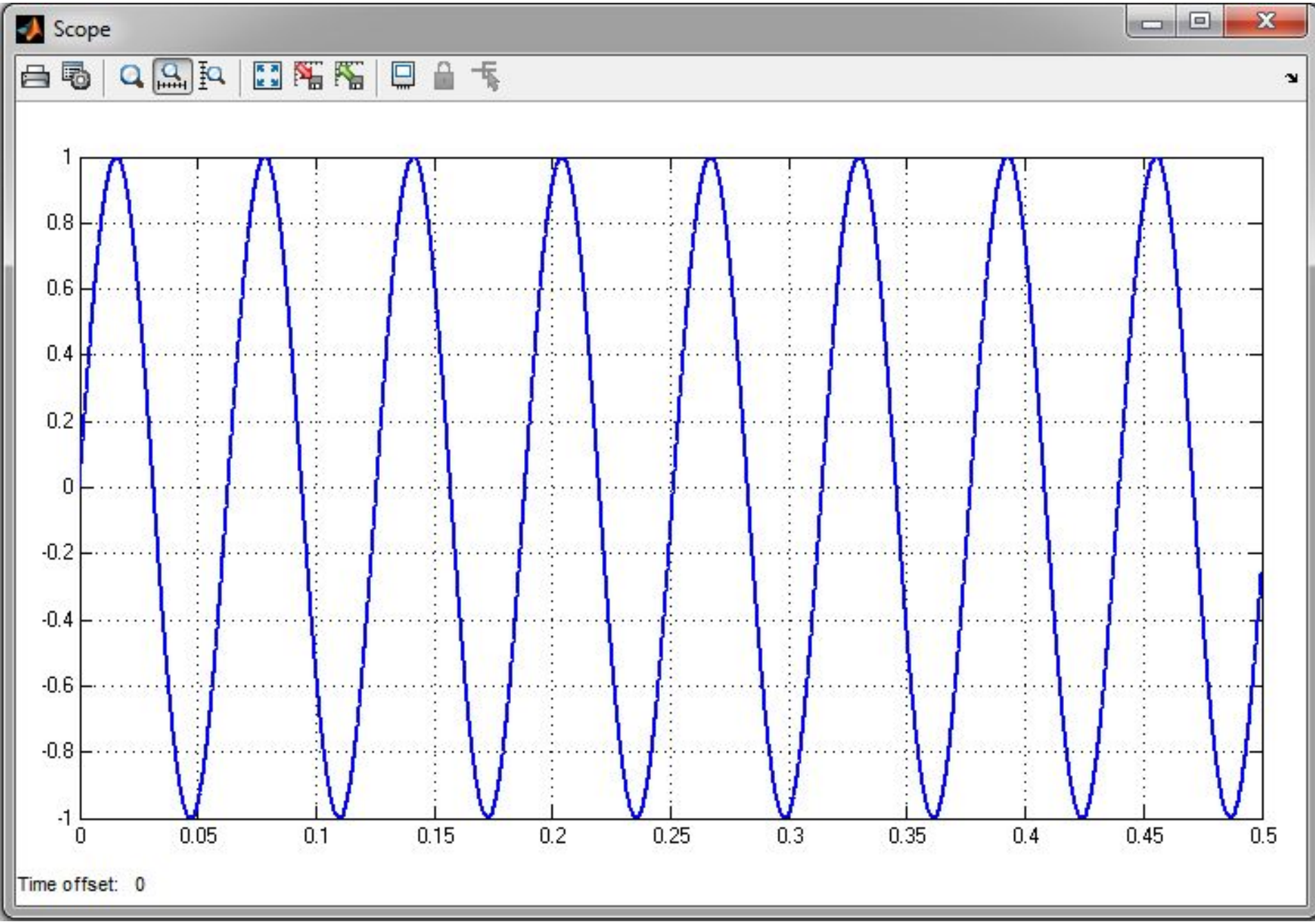
Scope
1
0.8
0.6
0.4
0.2
0
-0.2
-0.4
-0.6
-0.8
-1
0
0.05
0.1
0.15
0.2
0.25
0.3
0.35
0.4
0.45
0.5
Time offset: 0

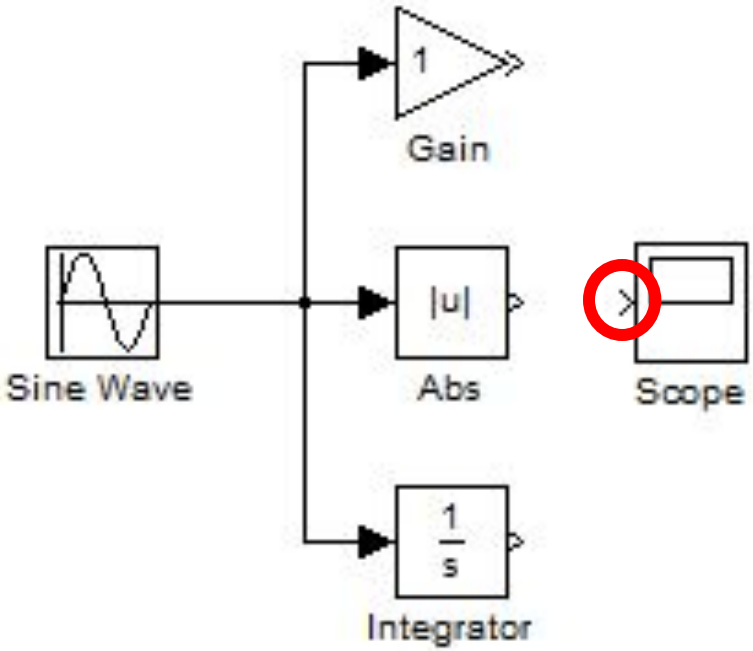
1
Gain
Sine Wave
|u|
Abs
Scope
1
s
Integrator

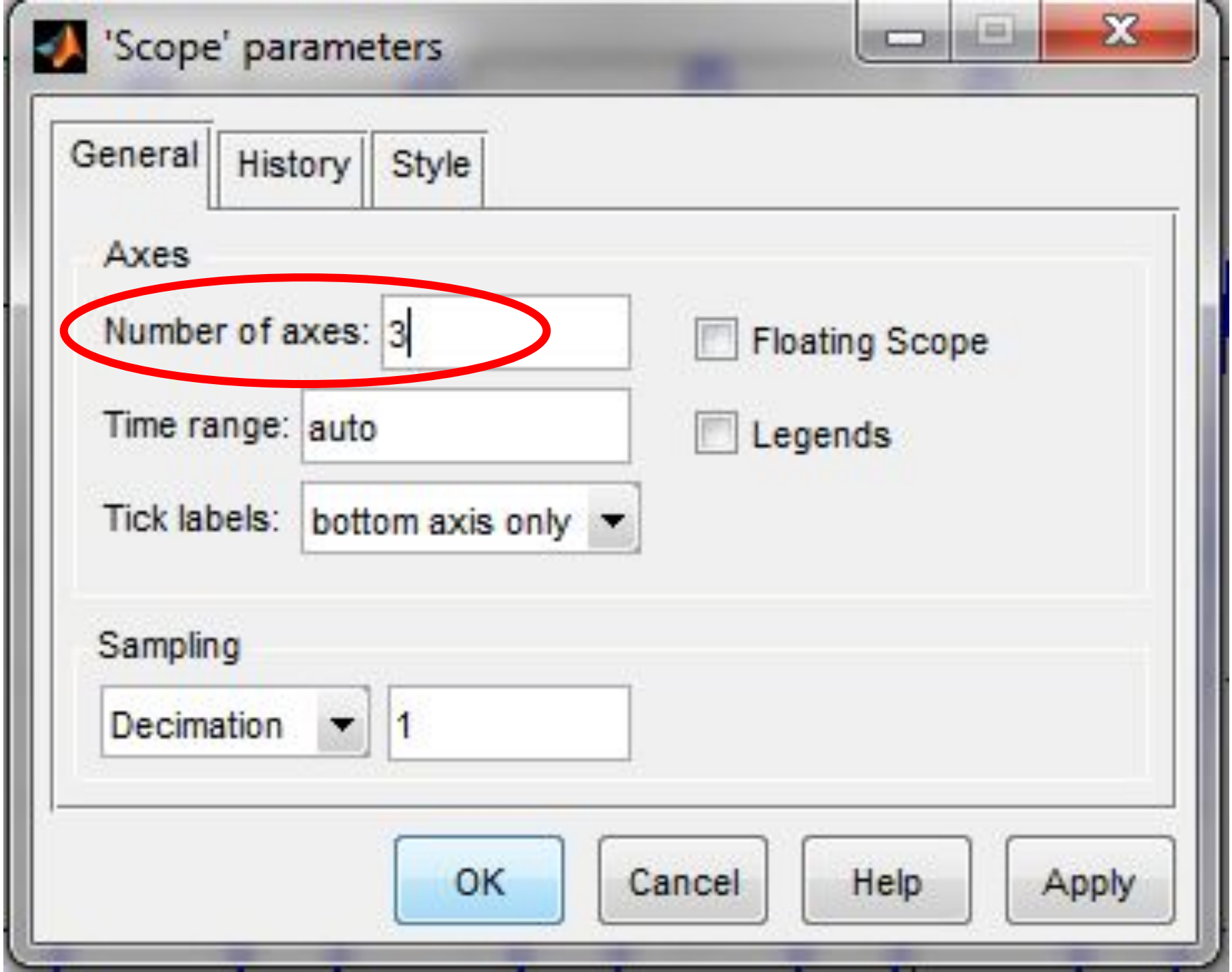
'Scope' parameters
General
History
Style
Axes
Number of axes:
3
Floating Scope
Time range:
auto
Legends
Tick labels:
bottom axis only
Sampling
Decimation
1
OK
Cancel
Help
Apply

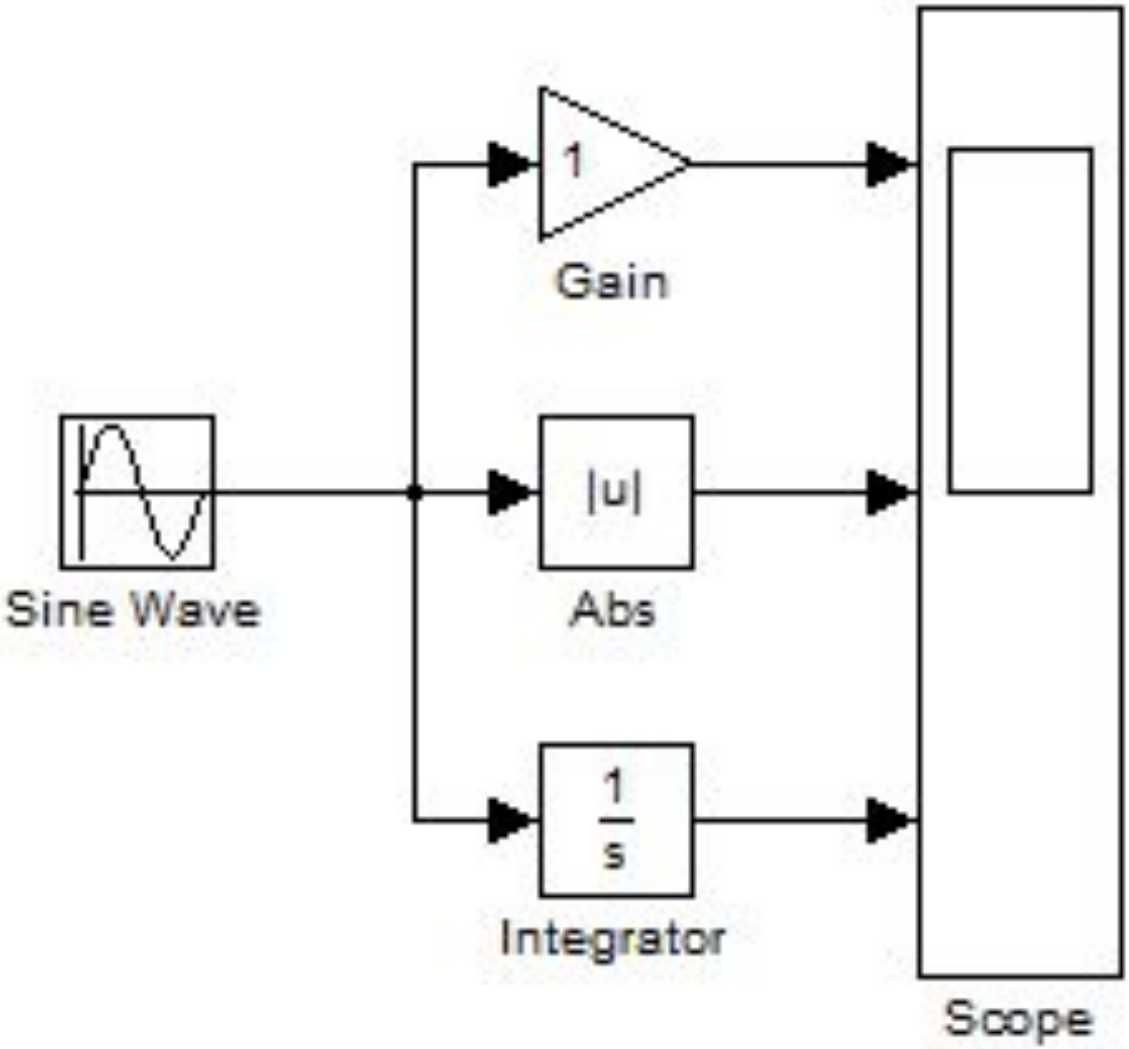
1
Gain
|u|
Abs
1
s
Integrator
Sine Wave
Scope

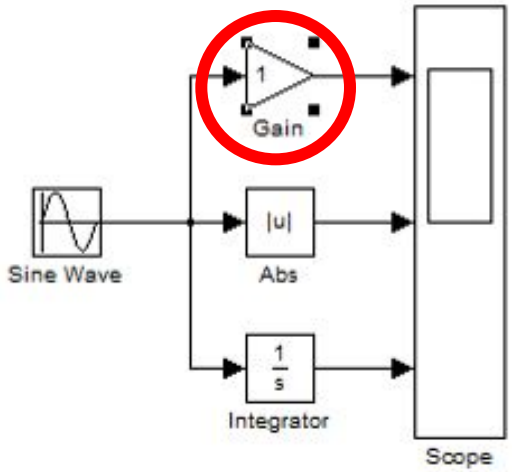
1
Gain
Sine Wave
|u|
Abs
1
s
Integrator
Scope

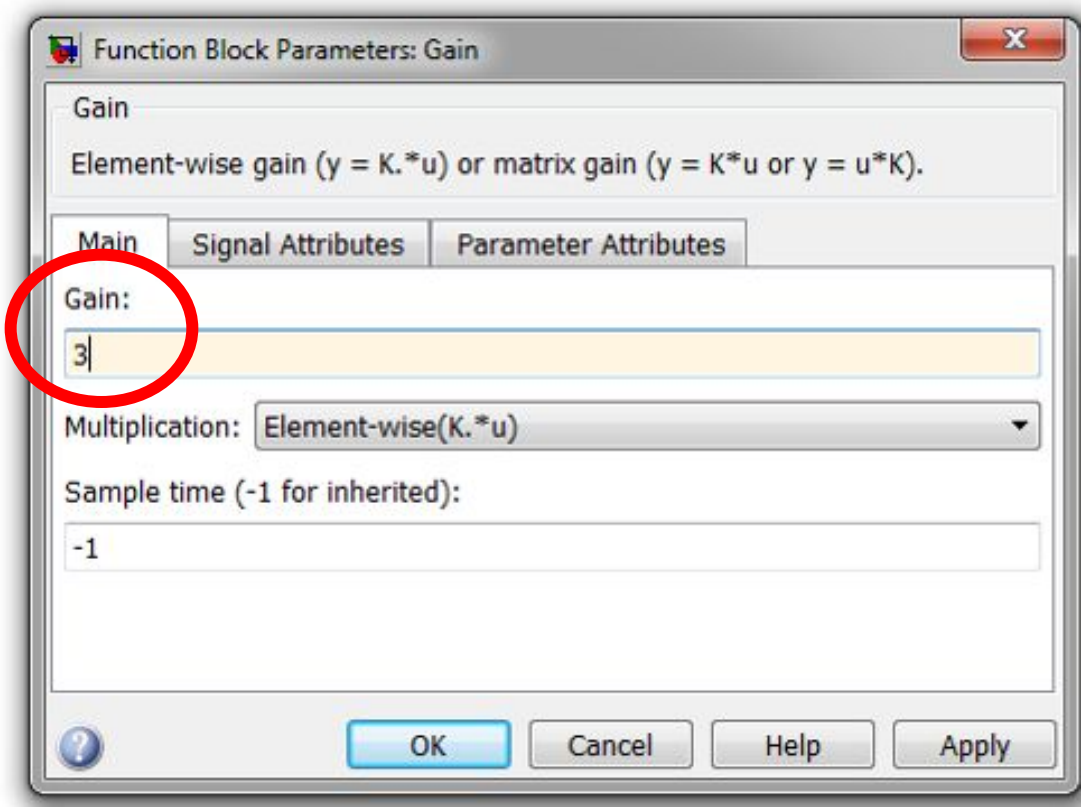
Function Block Parameters: Gain
Gain
Element-wise gain (y = K.*u) or matrix gain (y = K*u or y = u*K).
Main
Signal Attributes
Parameter Attributes
Gain:
3
Multiplication:
Element-wise(K.*u)
Sample time (-1 for inherited):
-1
OK
Cancel
Help
Apply

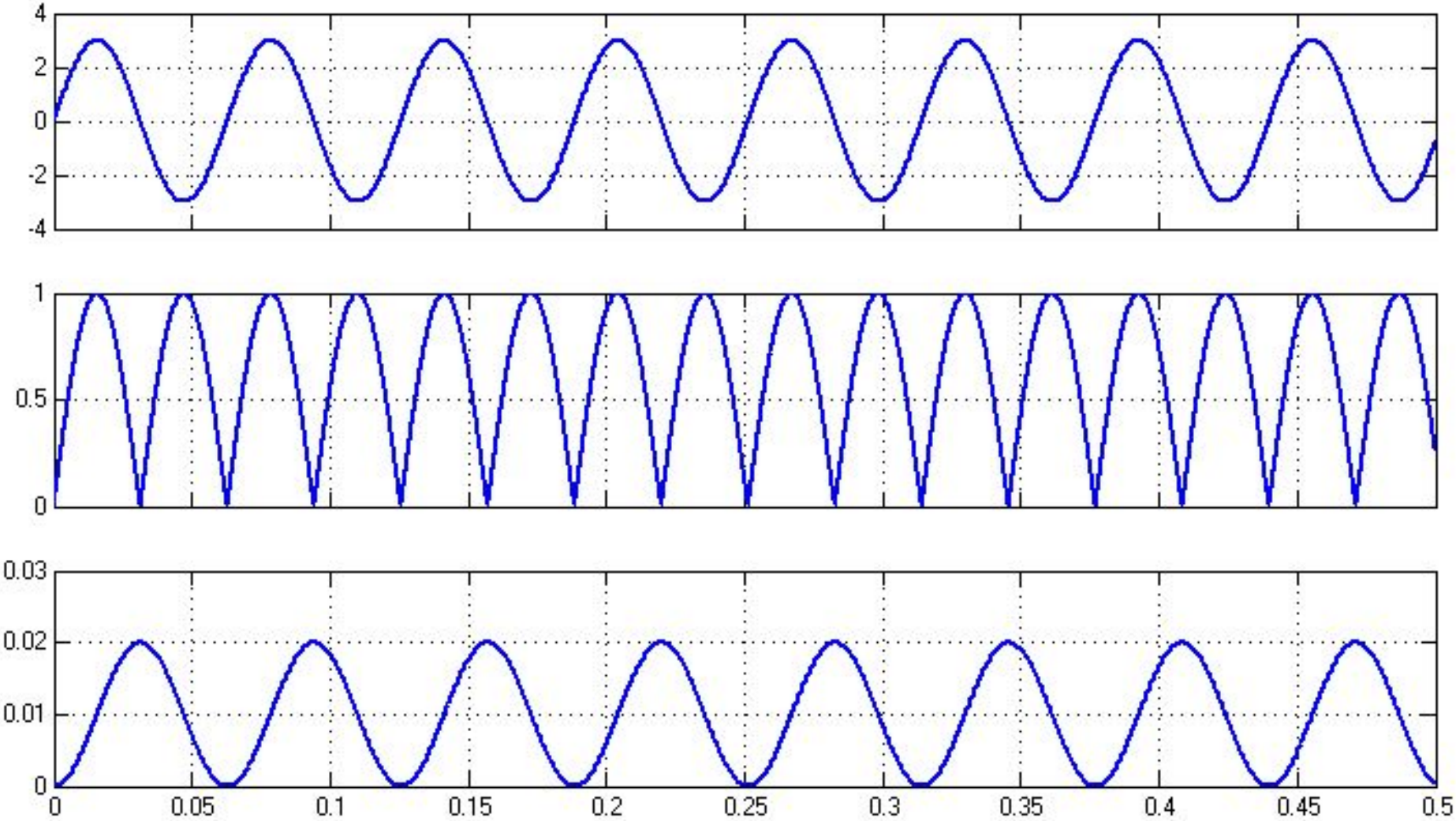
4
2
0
-2
-4
1
0.5
0
0.03
0.02
0.01
0
0
0.05
0.1
0.15
0.2
0.25
0.3
0.35
0.4
0.45
0.5

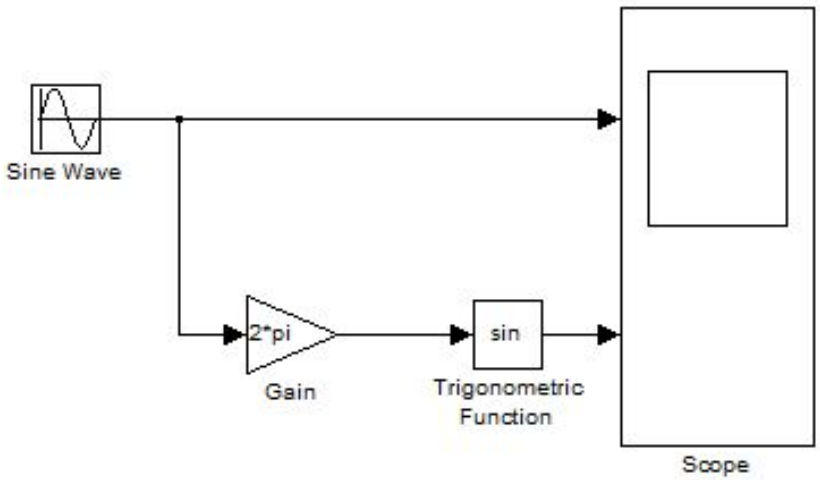
Sine Wave
2*pi
Gain
sin
Trigonometric
Function
Scope

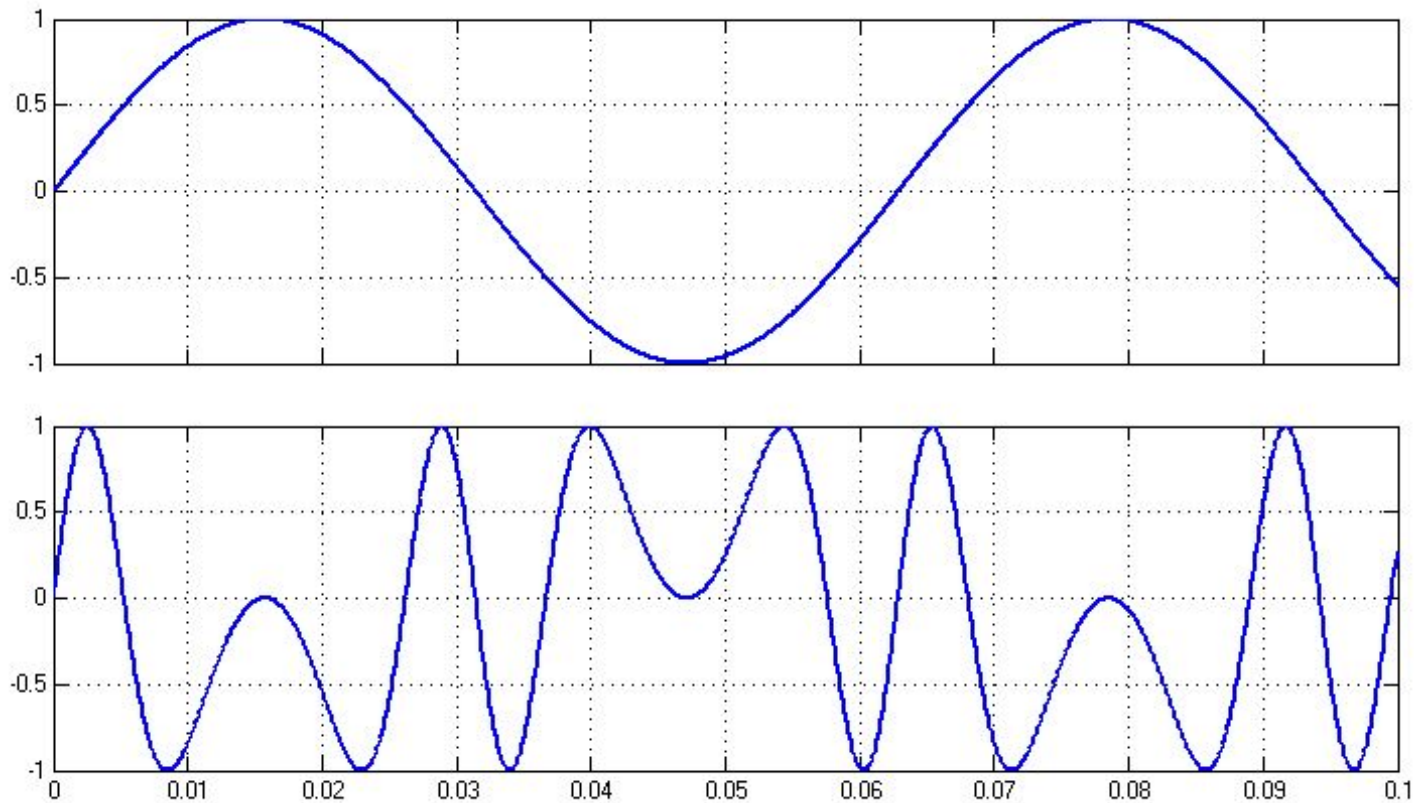
1
0.5
0
-0.5
-1
0
0.01
0.02
0.03
0.04
0.05
0.06
0.07
0.08
0.09
0.1

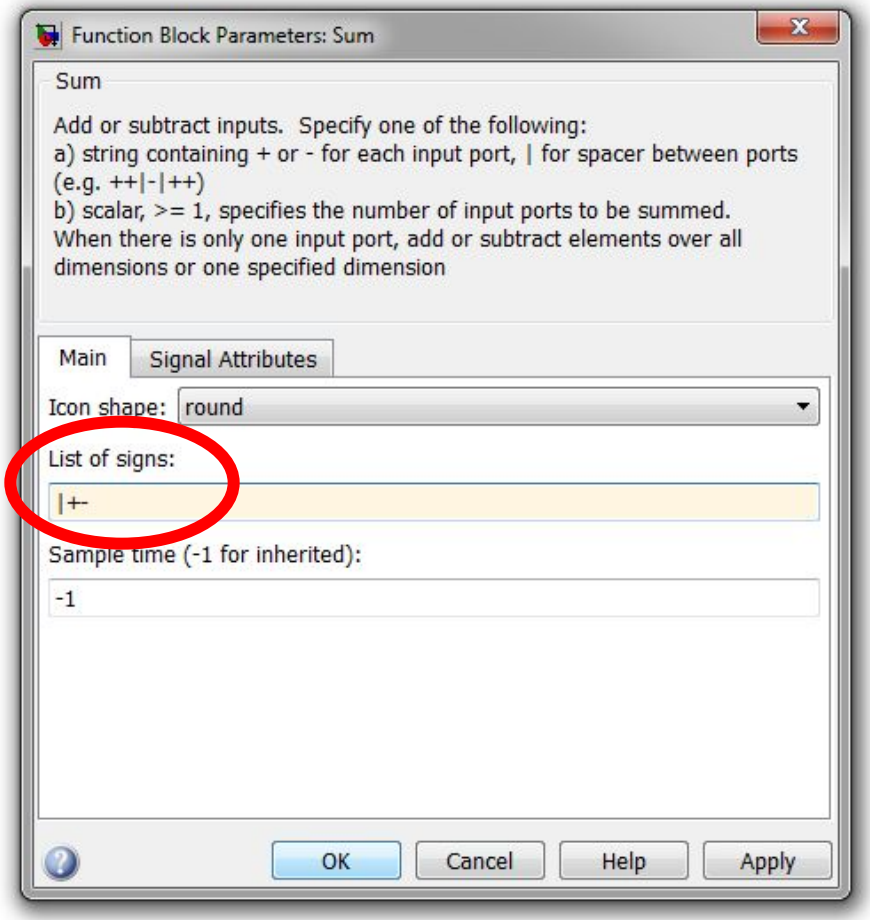
Function Block Parameters: Sum
Sum
Add or subtract inputs. Specify one of the following:
a) string containing + or - for each input port, | for spacer between ports (e.g. ++|-|++)
b) scalar, >= 1, specifies the number of input ports to be summed. When there is only one input port, add or subtract elements over all dimensions or one specified dimension
Main
Signal Attributes
Icon shape:
round
List of signs:
|+-
Sample time (-1 for inherited):
-1
OK
Cancel
Help
Apply

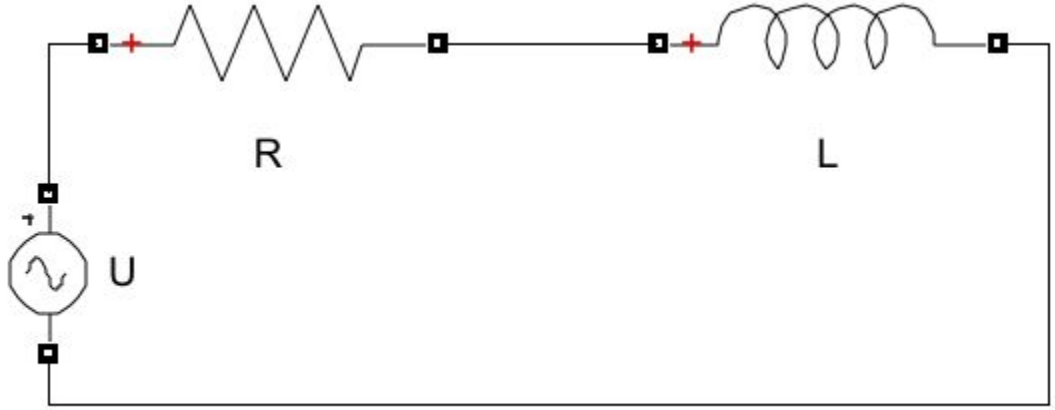

$$u(t) = e(t) + i(t) \cdot R$$

$$u(t) = e(t) + i(t) \cdot R$$
$$u(t) = e(t) + i(t) \cdot R$$
$$u(t) = e(t) + i(t) \cdot R$$
$$u(t) = e(t) + i(t) \cdot R$$
$$u(t) = e(t) + i(t) \cdot R$$
$$u(t) = e(t) + i(t) \cdot R$$
$$u(t) = e(t) + i(t) \cdot R$$
$$u(t) = e(t) + i(t) \cdot R$$
$$u(t) = e(t) + i(t) \cdot R$$
$$u(t) = e(t) + i(t) \cdot R$$

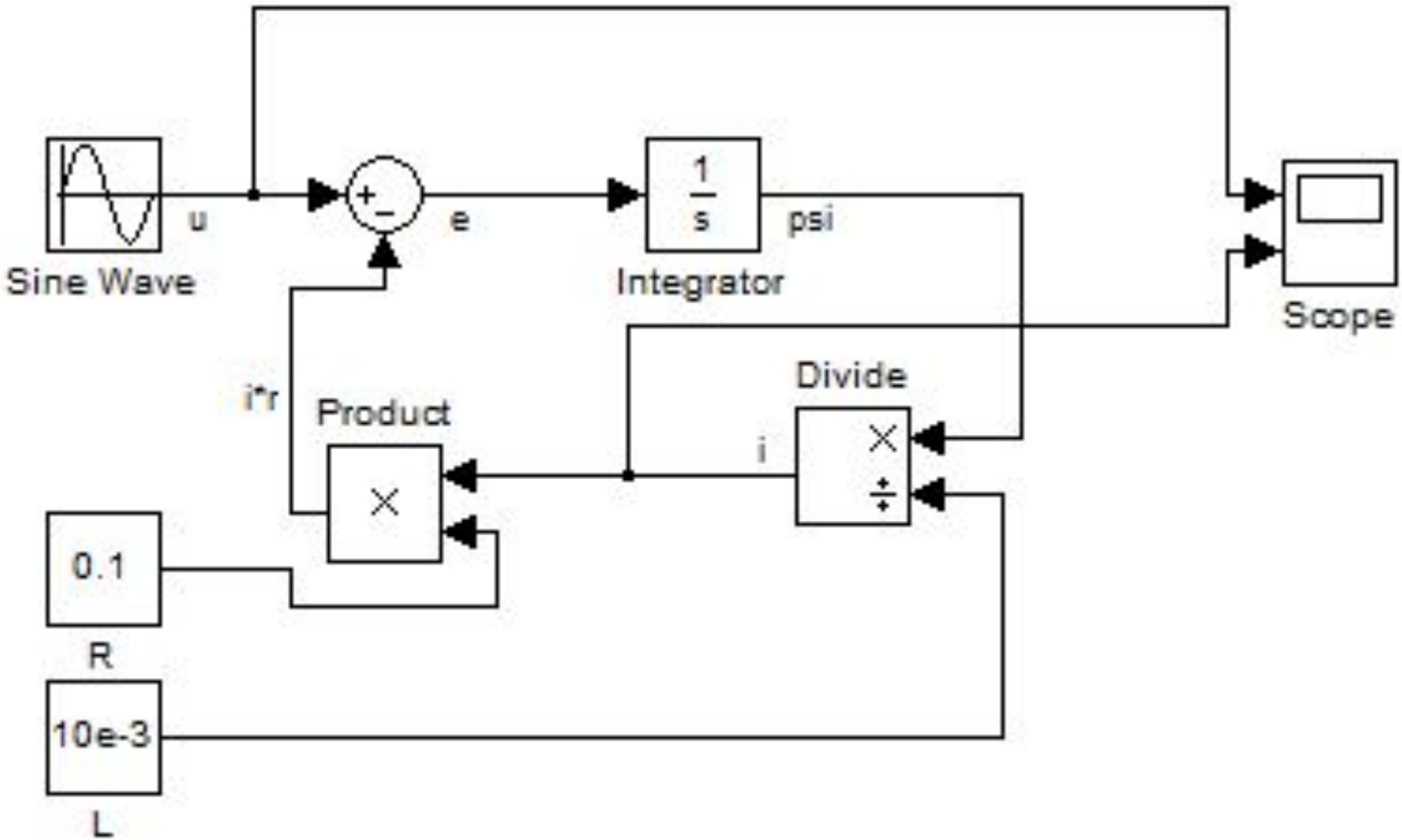
Sine Wave
u
e
1
s
Integrator
psi
Scope
i*r
Product
Divide
i
0.1
R
10e-3
L

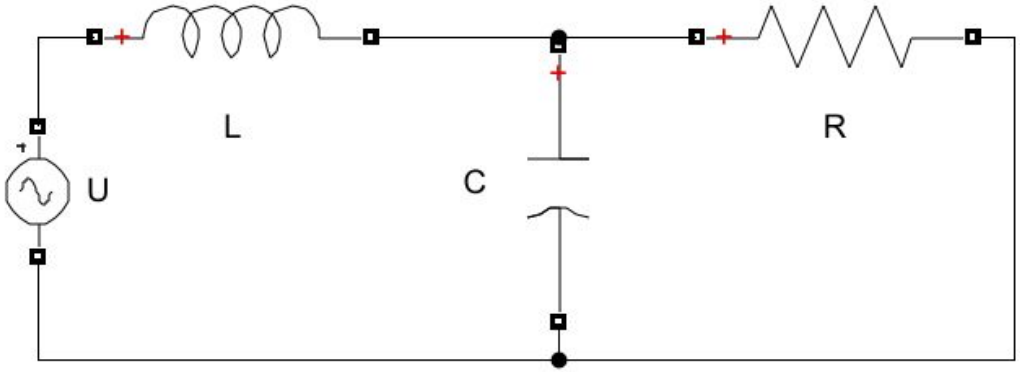

$$u(t) = e(t) + i(t) \cdot R$$

$$u(t) = e(t) + i(t) \cdot R$$

$$u(t) = e(t) + i(t) \cdot R$$

$$u(t) = e(t) + i(t) \cdot R$$
$$u(t) = e(t) + i(t) \cdot R$$
$$u(t) = e(t) + i(t) \cdot R$$
$$u(t) = e(t) + i(t) \cdot R$$
$$u(t) = e(t) + i(t) \cdot R$$

$$u(t) = e(t) + i(t) \cdot R$$

$$u(t) = e(t) + i(t) \cdot R$$

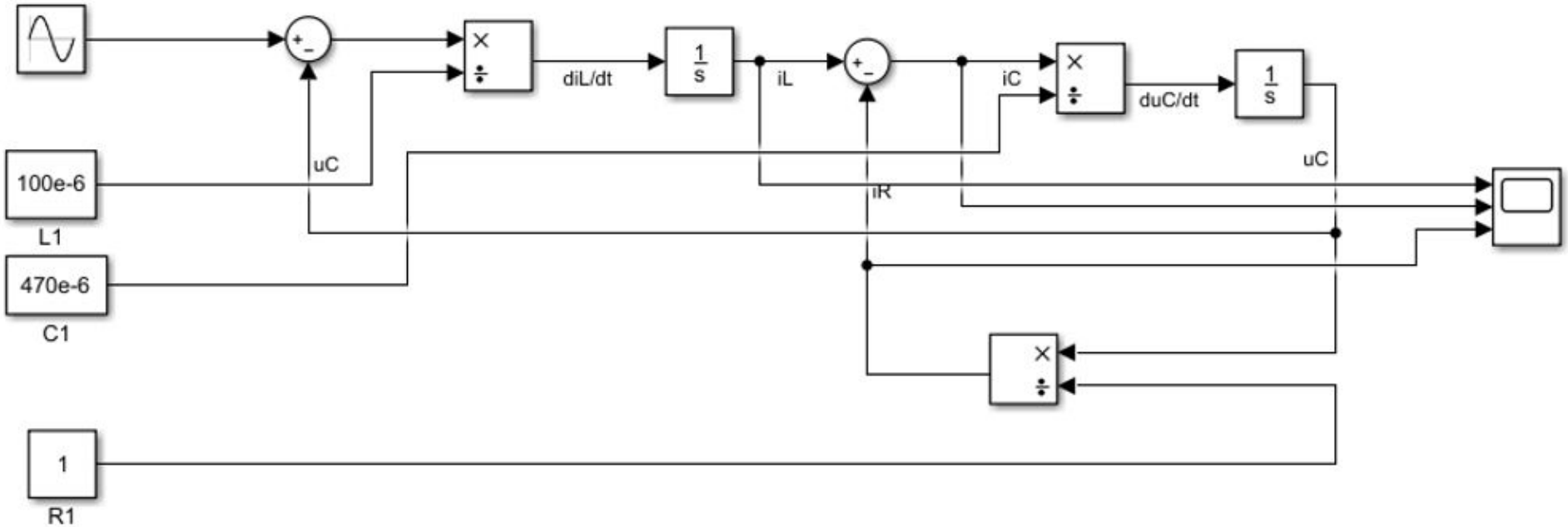
diL/dt
1
s
iL
iC
duC/dt
1
s
uC
uC
iR
100e-6
L1
470e-6
C1
1
R1

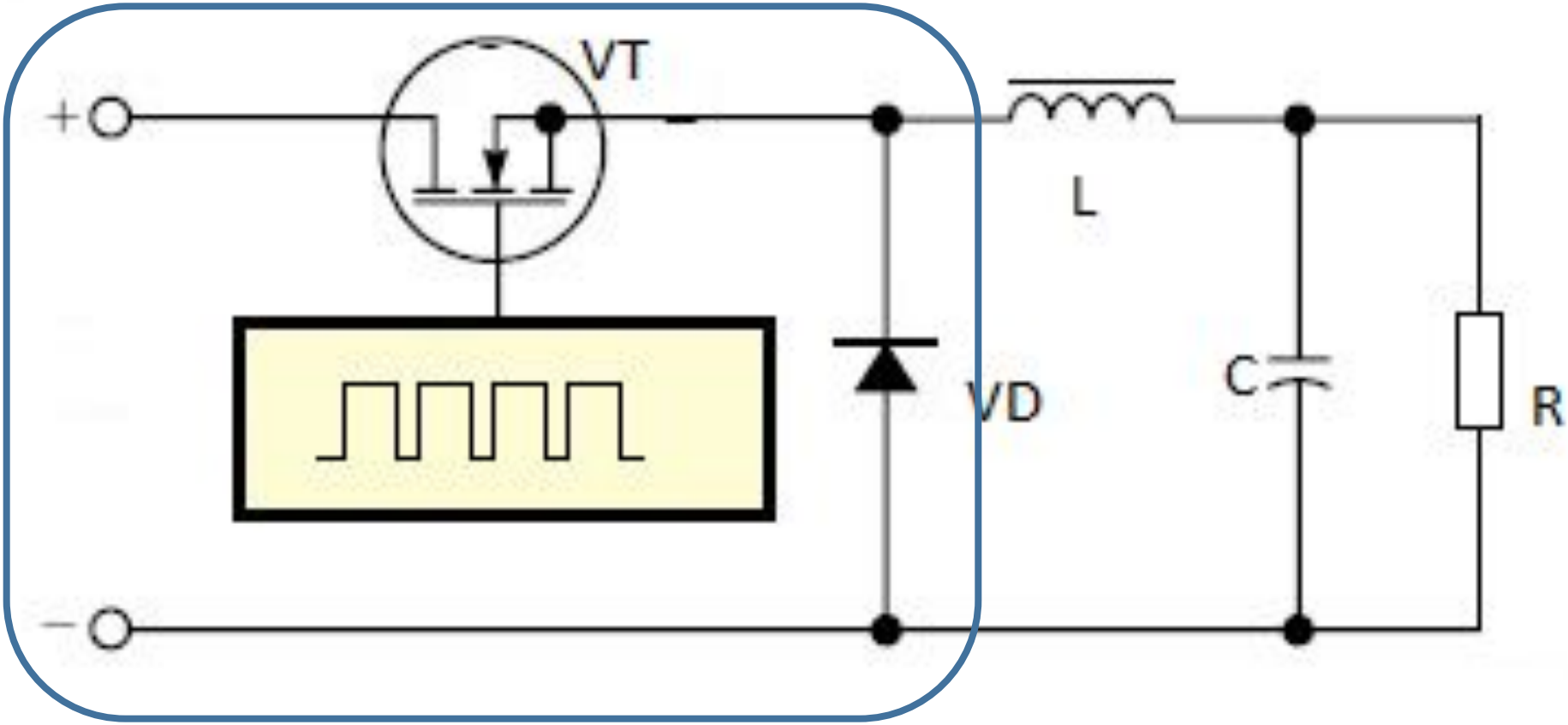
VT
+
−
L
VD
C
R

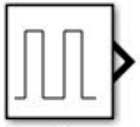

Pulse Generator1

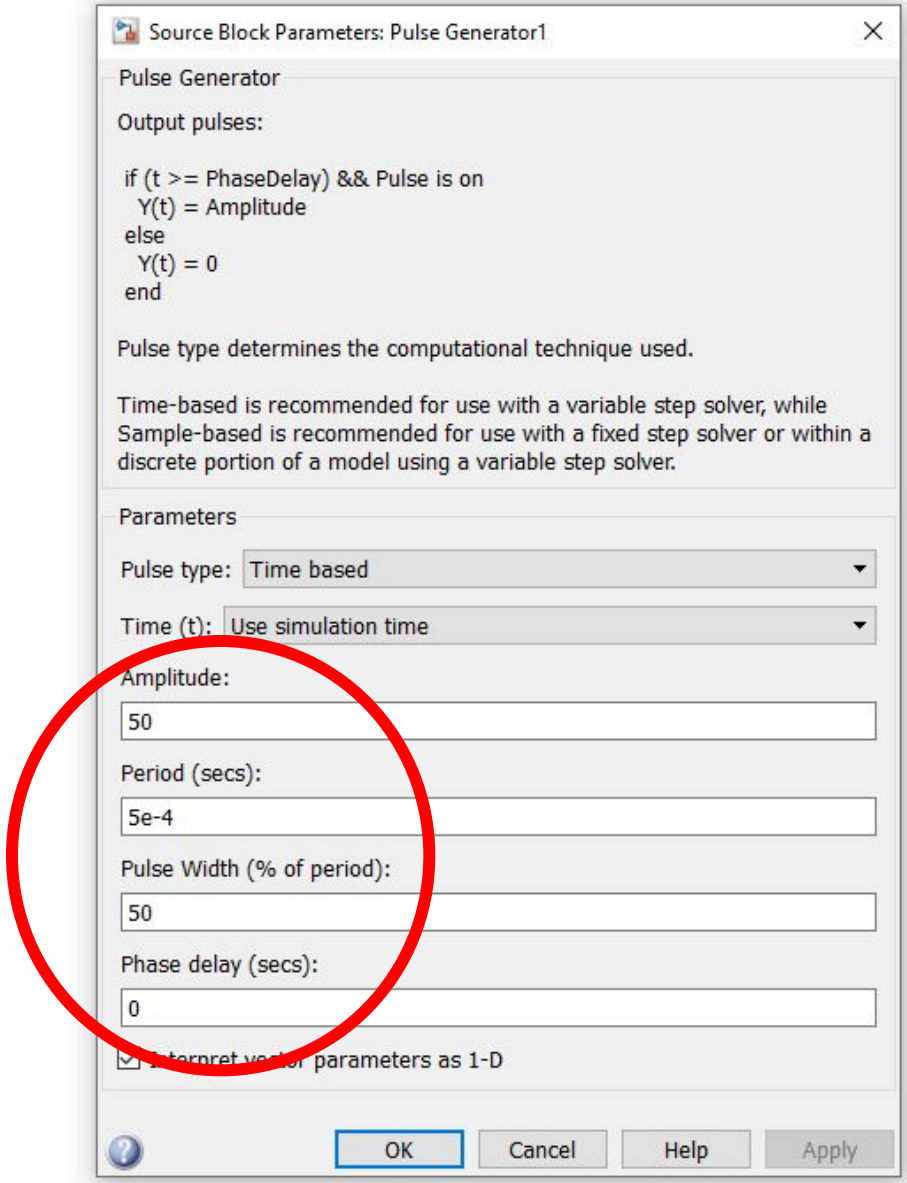

№ вар.	1	2	3	4	5	6
U_{in}, В	30	40	50	30	40	50
f, Гц	350	300	250	250	300	350
$R_н$, Ом	3.3	3.9	4.7	5.6	6.8	8.2

№ вар.	7	8	9	10	11	12	13	14	15
U_{in}, В	60	70	80	60	70	80	90	100	110
f, Гц	350	300	250	250	300	350	350	300	250
$R_н$, Ом	3.3	3.9	4.7	5.6	6.8	8.2	5.6	6.8	8.2

U_{in} – входное напряжение регулятора; f – частота переключения ключа;
R – сопротивление нагрузки

Для всех вариантов D = 0,5

$$L \geq \frac{R_н}{2f}(1 - D_{\min}).$$

D_{min} – минимальное значение коэффициента заполнения равное 0,1

$$2\pi \cdot f \cdot C_{out} R_н >> 1.$$