Introduction to cargo systems and handling

Shipping industry value chain

Cargo handling systems

Classification of cargo ships

Cargo type

- Bulk carrier (Dry bulk)
- Container ship
- RO RO ship
- Tanker (Crude, Product, Chemical)
- Gas Tanker (LNG, LPG)
- General cargo

Trade

- Liner
- Charter (Tramp)

Container ship

RO-RO

Bulk carrier

Tankers

Tankers

Liner Trades - Containerization

Topics:

Liner trade routes

Liner shipping

Container ships

ISO Containers

Container stowage

Liner Shipping – Container fleet

Container fleet:

	Size ('000 Teu)	Jan 08 No.	Jan 08 Teu
Feeder	<1,000	1,231	718
Handsize	1,000-1,999	1,158	1,635
Intermediate	2,000-2,999	675	1,702
Panamax	3,000-4,999	716	2,820
Post-Panamax	5,000-7,999	424	2,525
Large	8,000-9,999	144	1,229
Very Large	10,000+	9	115
Total		**4,324**	**10,662**

Source: Drewry SI July 2008

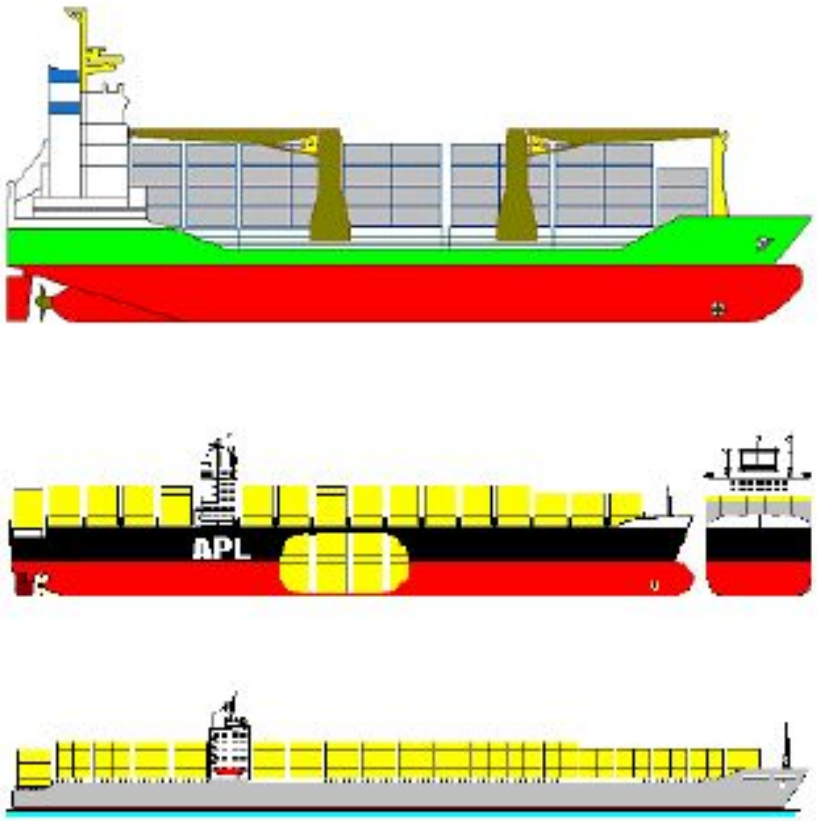

Source: GDV Container Handbook

Container ships – key terms

Dimensions:
- LOA
- Beam
- Draft
- Air-draft

Capacity:
- TEU, FEU
- Displacement
- Deadweight
- Gross and Net Tonnage

Containers

Standard Dimensions (feet)

Breadth 8 feet

Height options		Length options	Other Lengths
8.0	not common	20 Standard	45 feet
8.5	Standard	40 Standard	53 feet
9.0	not common		
9.5	Hi Cube		

Containers - Types

Containers - Reefers

Containers - Markings

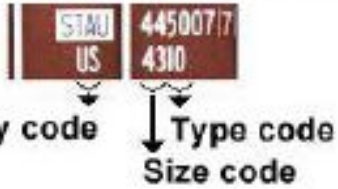

Source: GDV Container Handbook

Containers – stowage on-board

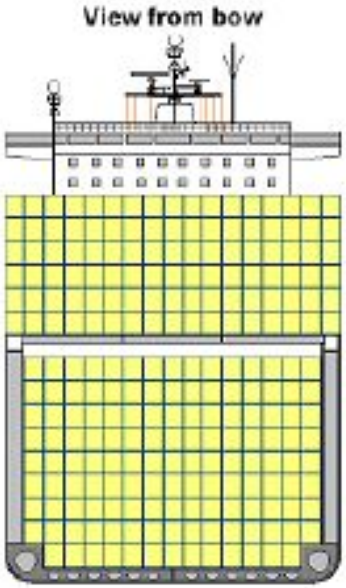

Source: GDV Container Handbook

Containerships – Bay plans

a 20' container in the red-colored slot: 531212

a 40' container in the blue-colored slot: 540788

a 20' container in the green-colored slot: 551184

Source: GDV Container Handbook

Containerships- Securing below decks

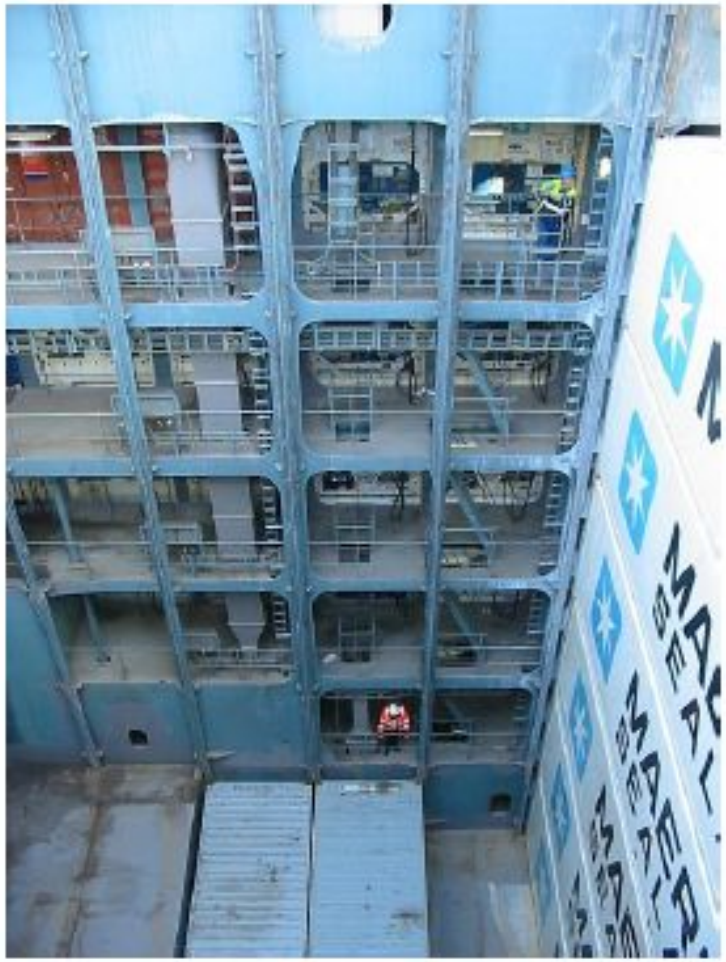

Containerships- Securing on-deck

Twistlocks

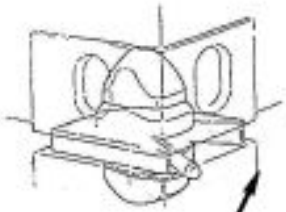

Corner casting

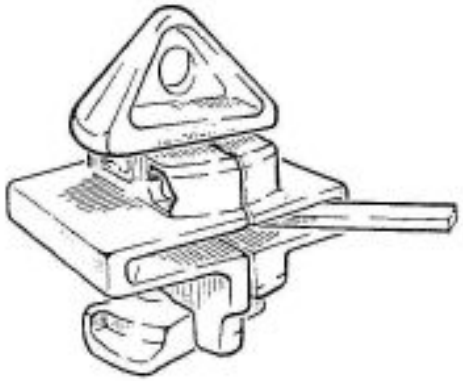

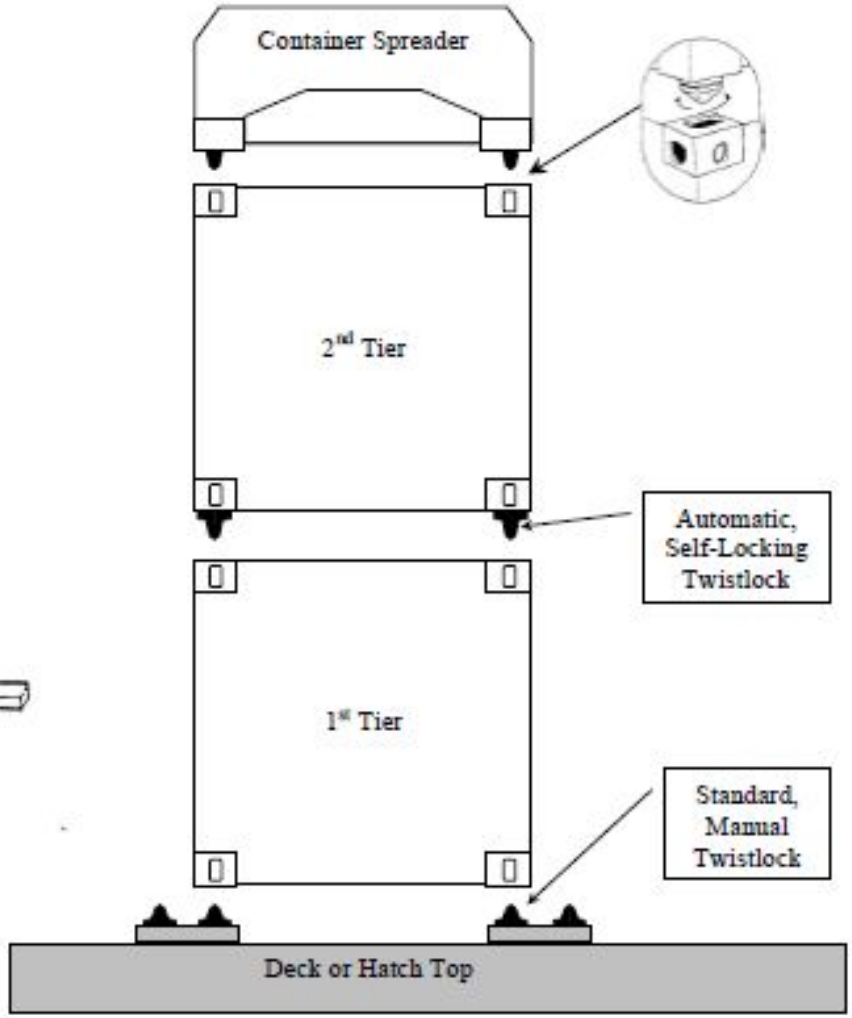

Containerships- Securing on-deck

Containerships- Securing on-deck

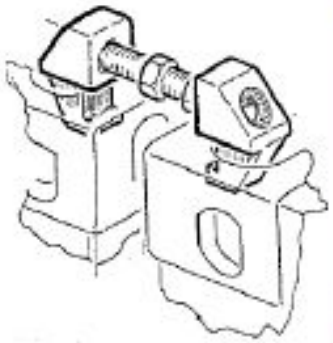

General Cargo and RO-RO

Topics:

Ship layout
Stowage considerations
- Volume and weight
- Stability & stress
- Cargo protection & security
- Causes of cargo damage

Cargo plans
Cargo securing
Deck cargoes
Heavy cargoes
RO-RO ships and cargoes
Car Carriers

Readings 1.1, 2.1, 2.2
Video: RO-RO Safety

General Cargo

Multipurpose cargo ship

Image circa 1967 - http://freport.wa.gov.au/sitePrintVariant/About/PhotoGallery/3776.asp

General Cargo

General cargo ship – traditional layout

14,200 tons DWT

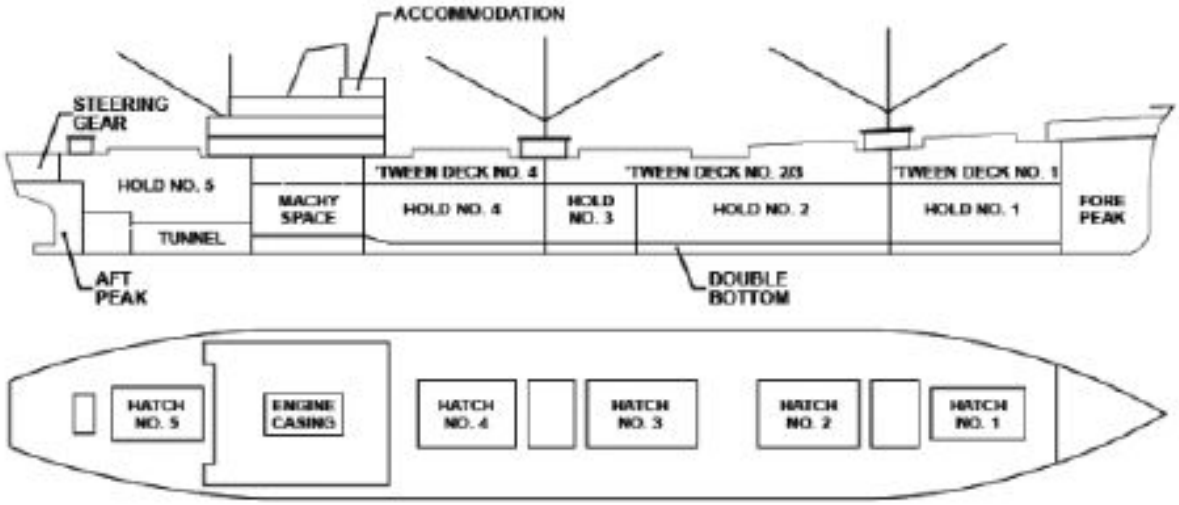

Source: http://www.globalsecurity.org/military/systems/ship/break-bulk-comp.htm

General Cargo Ships - Tweendecks

Source: UK P&I Club

General Cargo

Use of Dunnage:

- protect cargo from moisture
- assist in ventilation
- evenly spread the load of heavy stows
- provide separation of cargo.
- secure cargo by filling in broken stowage

Source: UK P&I Club

General Cargo – Planning for stowage

Stability considerations:

- Weights – top/bottom
- List
- Trim

Top weights reduce stability

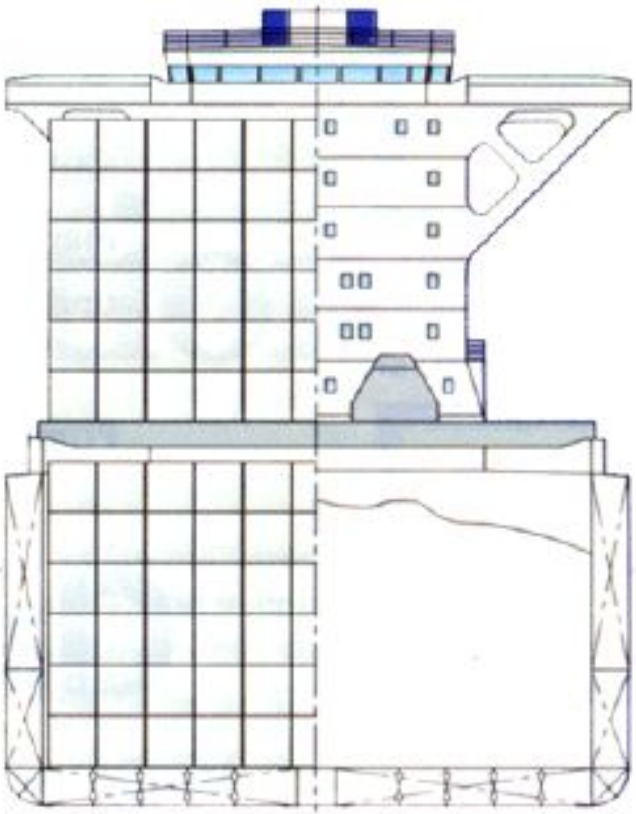

Bottom weights improve stability

Image: www.ship-technology.com

General Cargo & RO-RO

General Cargo – Planning for stowage

Distribution of cargo:

- Avoid stress

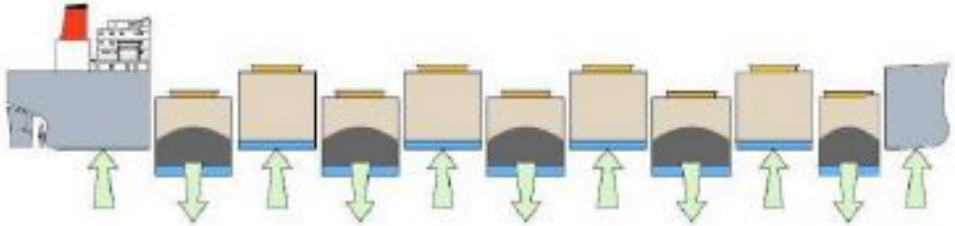

General Cargo – Planning for stowage

Protection and security of cargo:

http://www.nkkk.com.sg/CargoSurvey.htm

Some causes of cargo damage/loss

- improper handling during loading and discharging
- rubbing and chafing with ship structures or other cargo
- temperature fluctuations during the voyage
- contamination with other cargo
- dust and stain
- moisture, rain, fresh or sea water
- rats, mice and other vermin
- crushing under the weight of other cargo
- reaction with other cargo
- heat
- inadequate securing against shifting
- theft

General Cargo – Planning for stowage

Cargo stowage plans

Additional considerations:

- Port sequence
- Maximize number of hooks

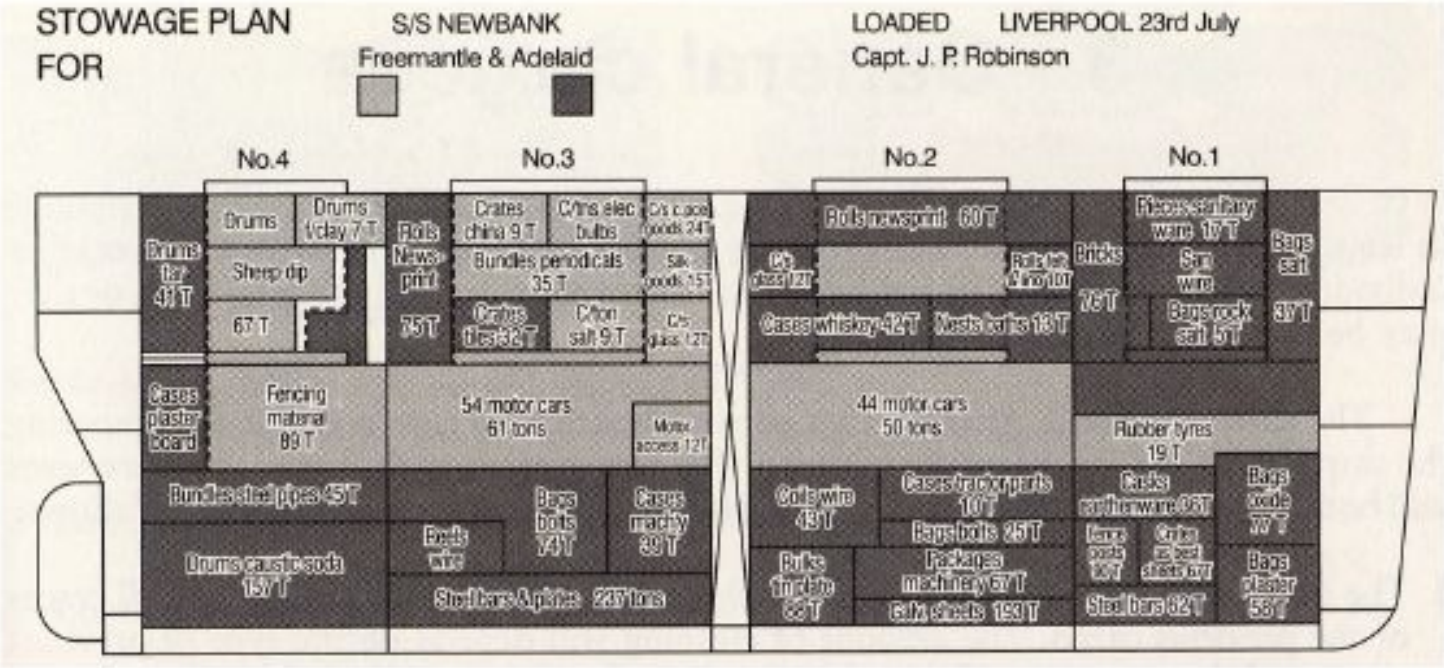

General Cargo – Securing

Ship's motions

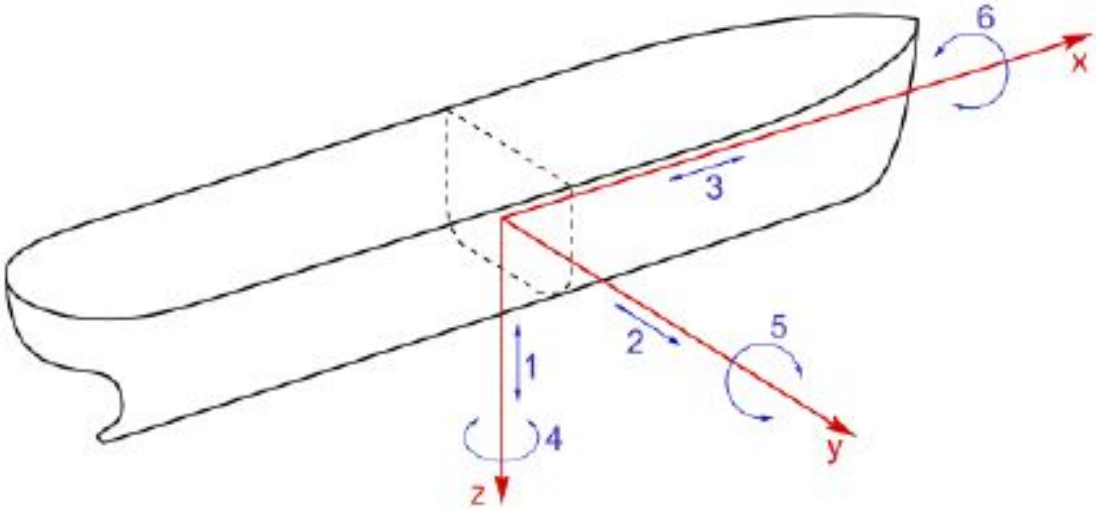

1 - Heave
2 - Sway
3 - Surge
4 - Yaw
5 - Pitch
6 - Roll

General Cargo – Securing

Use of timber to secure cargo

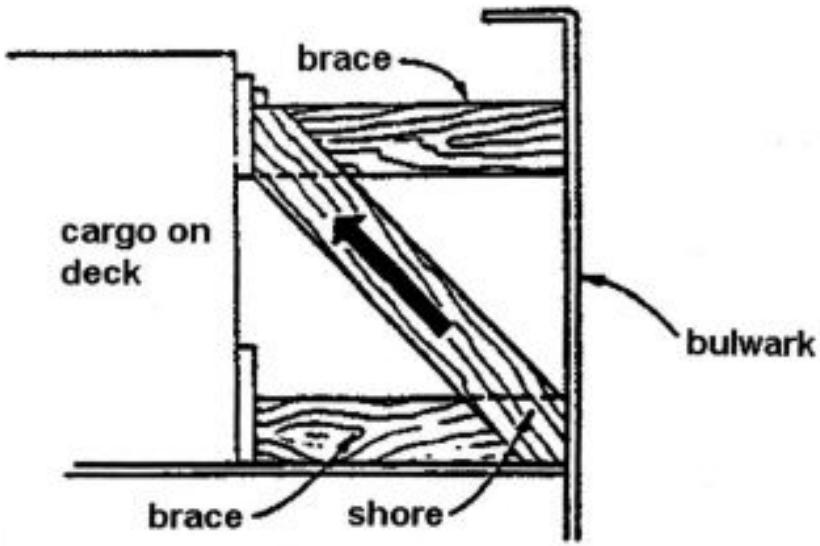

shoring

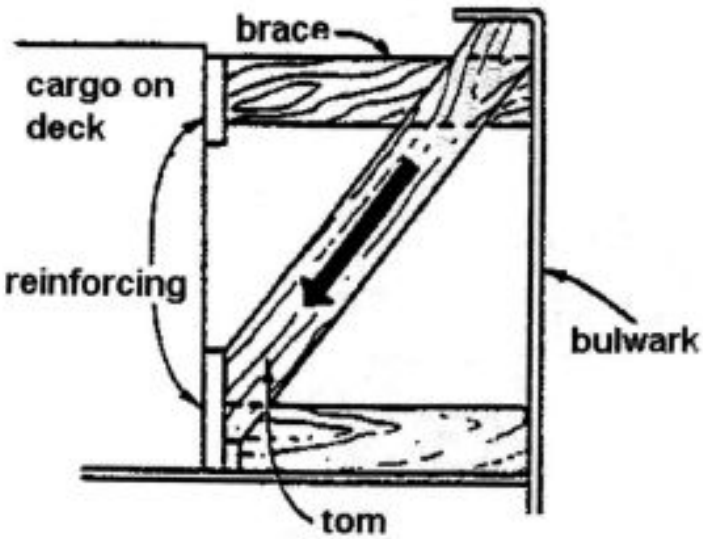

tomming

General Cargo – Securing

Other methods:

- Eliminating voids
- Skid prevention
- Lashing

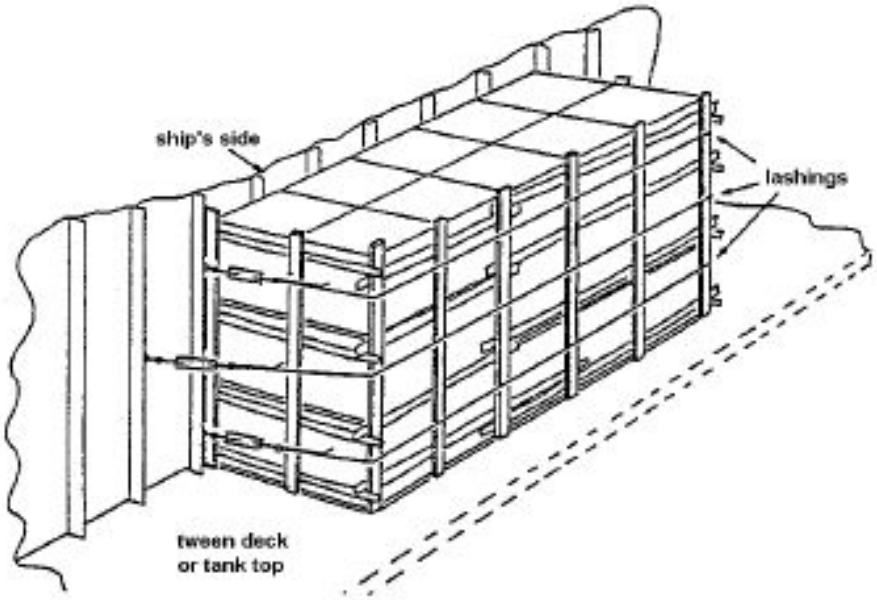

Documents:

- Ship's Cargo Securing Manual
- Marine Orders (Aus)
- IMO Code of Safe Practice for Cargo Stowage and Securing

General Cargo – Securing

Source: UK P&I Club

General Cargo – Deck Cargo

Check:

- Stability
- Access to safety equipment
- Access to working areas
- Adequate securing

Source: UK P&I Club

General Cargo – Deck Cargo

Securing Timber deck cargoes

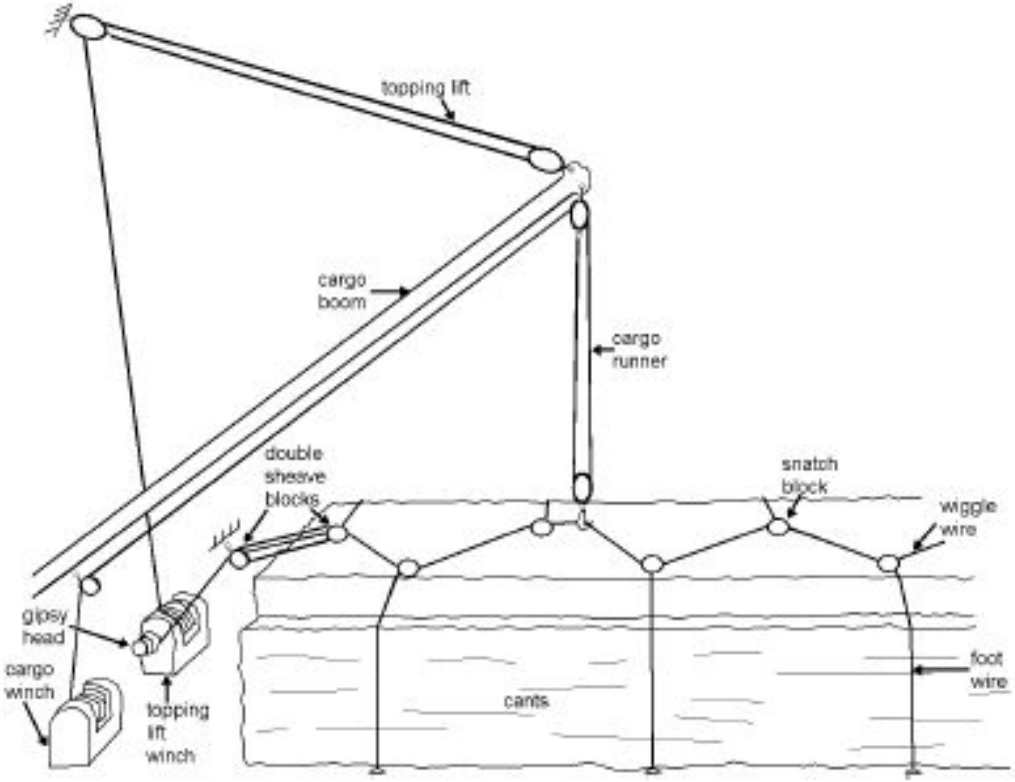

General Cargo – Heavy Cargoes

Check:

- SWL of cargo gear
- Load limit of deck
- Stability of vessel
- Adequate securing

http://www.ownership.de/english/downloads-photos.htm

General Cargo – Heavy Lift

Source:http://www.dieselduck.ca/images/USS_Cole/index.htm

RO-RO Cargo

RO-RO Cargo

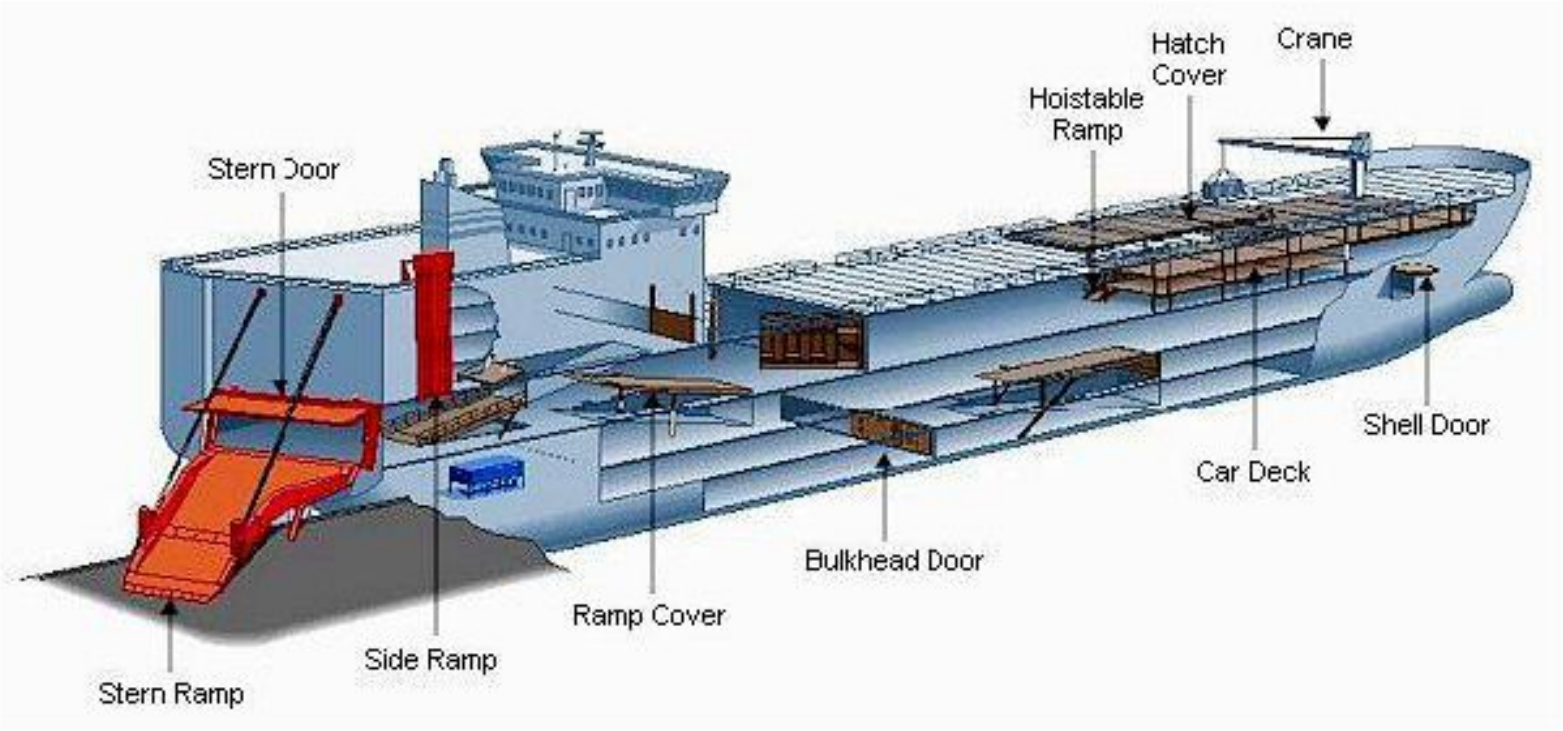

Large decks are hazardous if water gets in

RO-RO Cargo

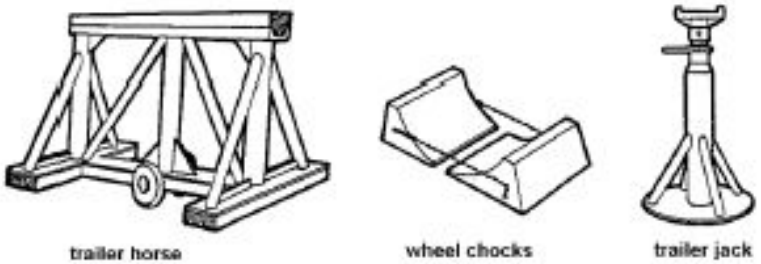

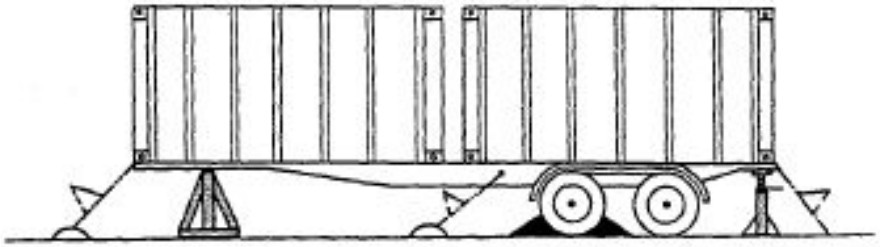

Trailer securing equipment

Car Carriers

Bulk Carriers

Readings 3.1 and 3.3

Topics:

- Tramp trades
- Bulk cargoes
- Bulk carriers
- Bulk cargo hazards
- Loading/unloading
- Publications

Main commodity groups

Energy Trade	• Nearly 50% • Crude oil, products, gas, coal
Agricultural trade	• 13% • Cereals, refrigerated food, fats, fertilizers
Metal industry trade	• 21% • Ores, steel products, scrap
Forest product trades	• 4% • Timber, paper, pulp
Other industrial materials	• 9% • Cement, salt, alumina, chemicals
Other manufactures	• 3% (probably 50% by value) • Textiles, machinery, vehicles, consumer goods

Data Source: Clarkson Research Studies 2004

Shipping market segmentation

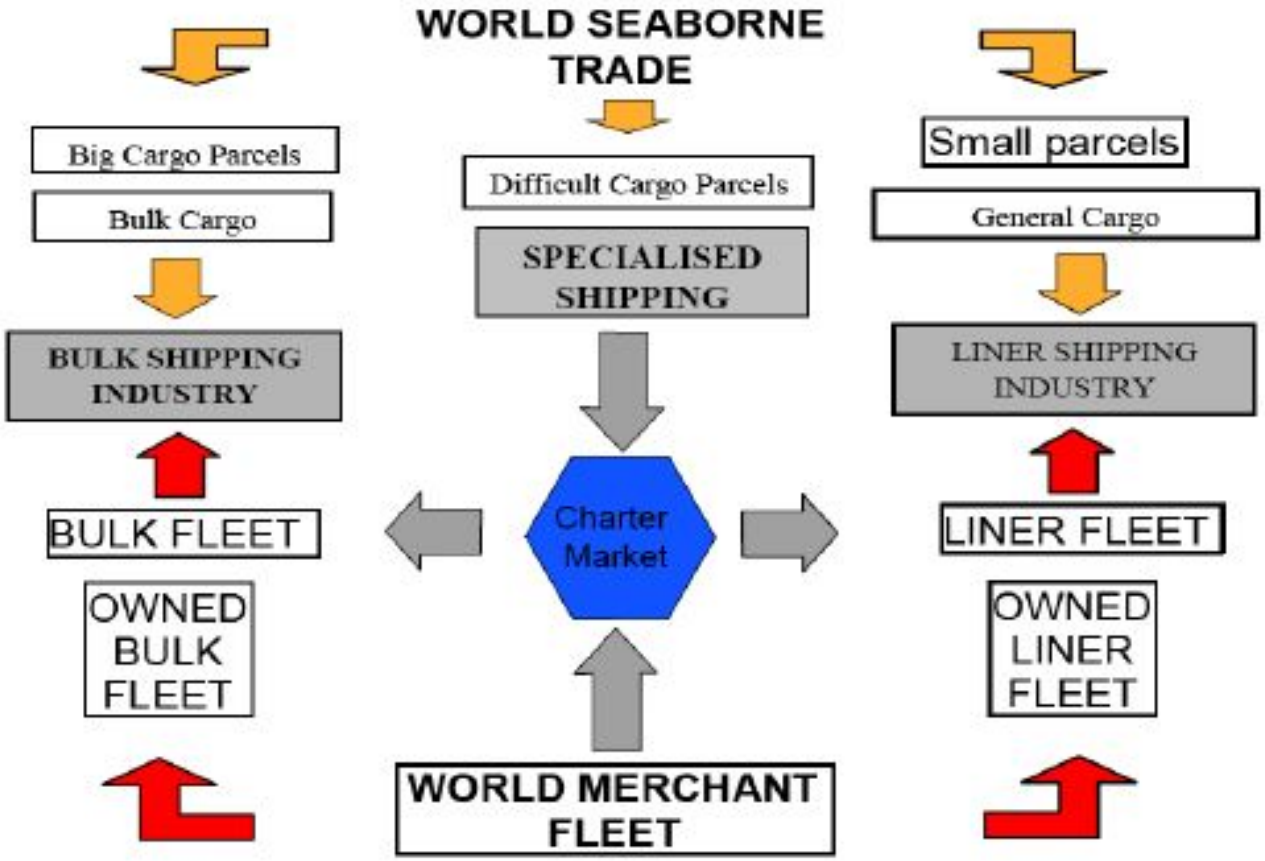

Source: Martin Stopford, Maritime Economics: 3rd edition 1997

Bulk Carriers

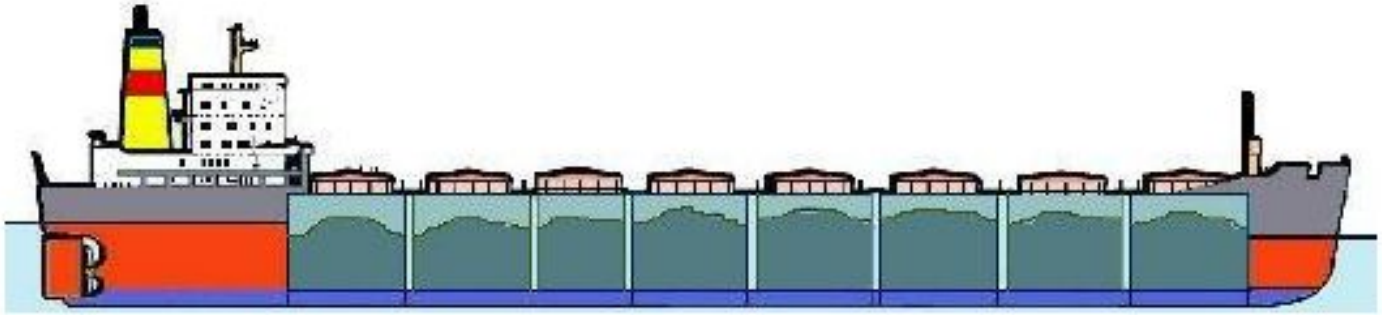

Bulk Carriers – typical cargo hold

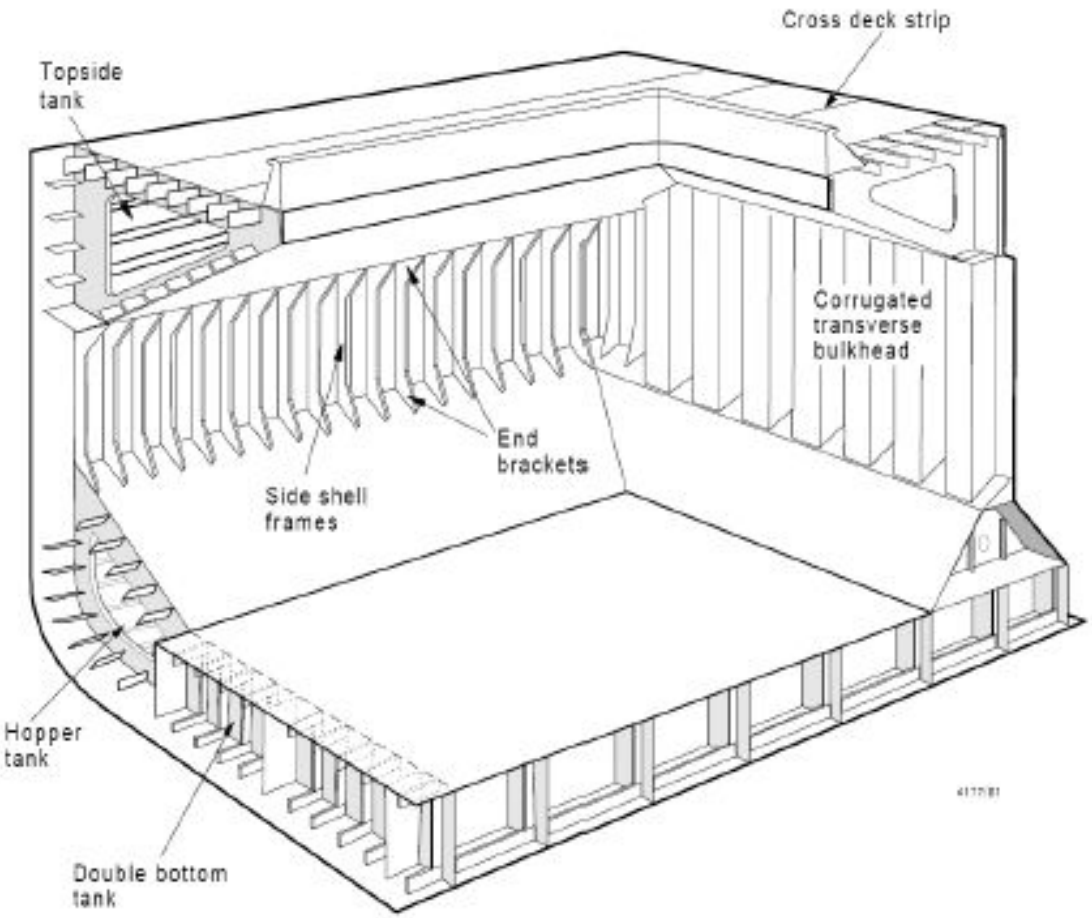

Source: UK P&I Club

Bulk Cargo Hazards

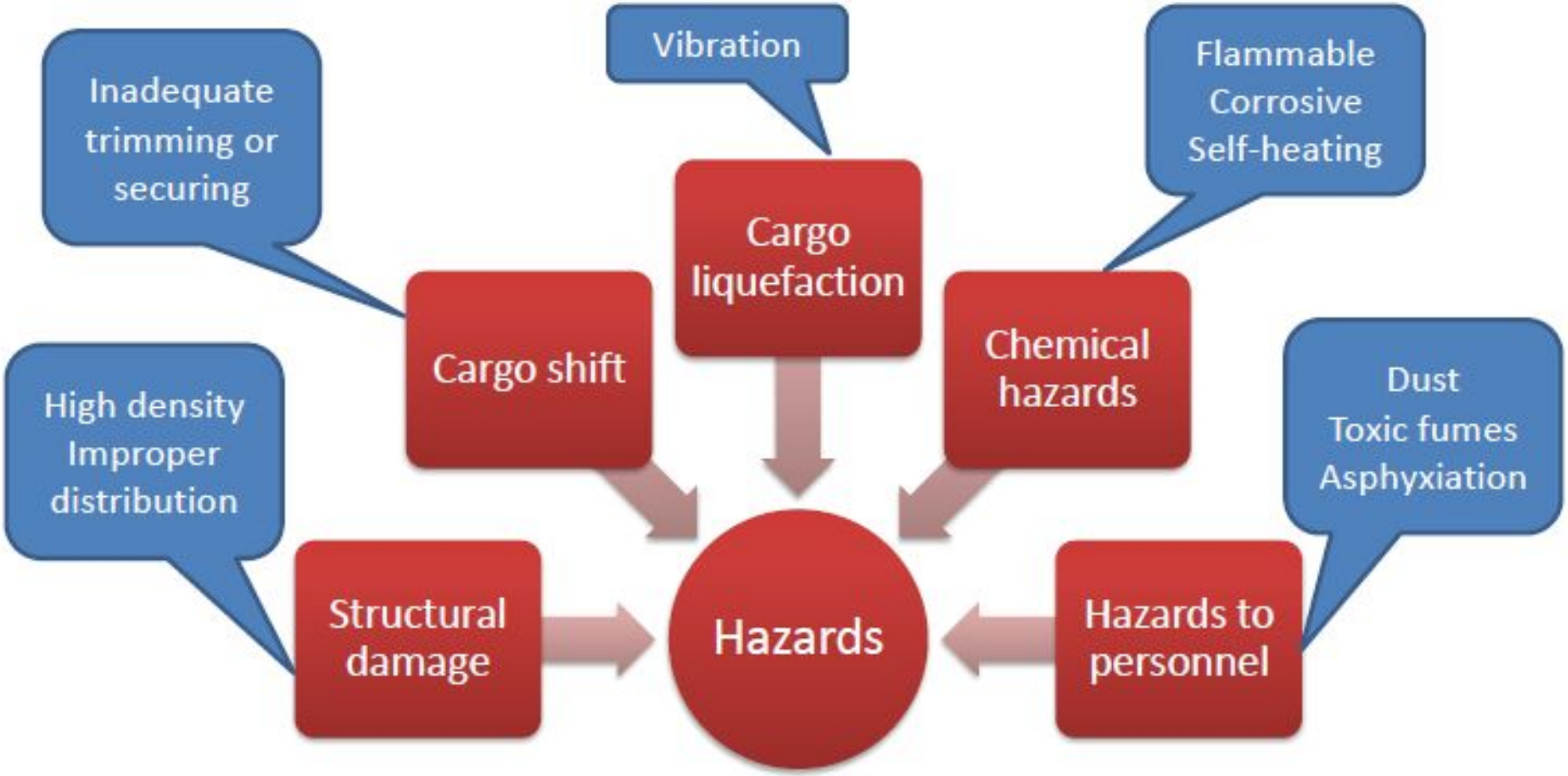

Ships' ballast water may transport harmful organisms

Structural damage

Cargo Distribution:

Shearing and Bending

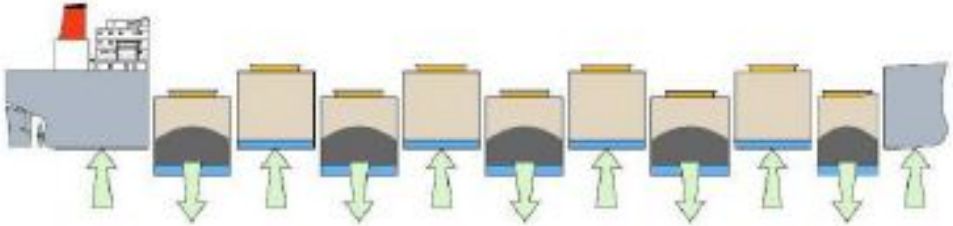

Shore facilities – Bulk cargoes and containers

Topics:

- Bulk handling facilities
- Bulk handling considerations
- Terminal layout
- Container handling systems
- Container handling equipment
- Container equipment selection
- Automation

Bulk Liquids (Petroleum)

Readings: 5.1 – 5.7, 6.2

Topics:

Tanker construction

Cargo handling equipment

Pumps and piping

Inert gas system

Crude oil washing system

Hazards

Marine pollution

Product Tankers

Source: www.solentwaters.com.uk

Crude Oil Tankers

Sources of ignition

- DIRECT HEAT
- MECHANICAL SPARKS
- ELECTRICAL EQUIPMENT
- STATIC DISCHARGES

Crude Oil Tankers

Things that must be right:

- Ship/shore interaction
- Cargo monitoring
- Ship monitoring

Chemical tankers

Cargo containment:

Independent tank	not part of the hull
Integral tank	part of the hull
Gravity tank	may be independent or integral
Pressure tank	independent tank for high pressure

Chemical tankers

Cargo Tank materials:

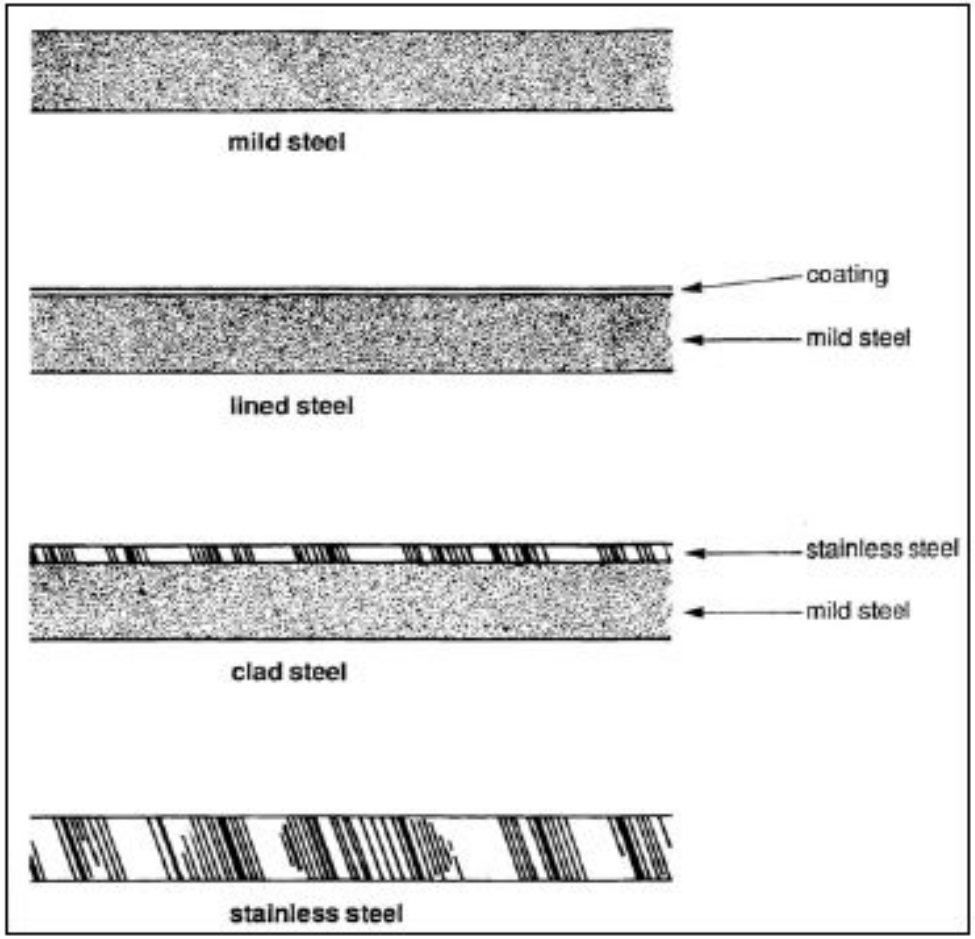

Chemical tankers

Heating coils:

Chemical tankers

Tank environment:

- Inert gas used is nitrogen
- Toxic vapors returned ashore via vapor return line
- Thorough gas freeing required prior to entry
- Tanks cleaning is very important

Chemical tankers

http://www.ships-info.info/merchant-ships.htm

Read the following article on IMO website:
CARRIAGE OF CHEMICALS BY SHIP

http://www.imo.org/home.asp?flash=false

Gas tankers

Gas tankers

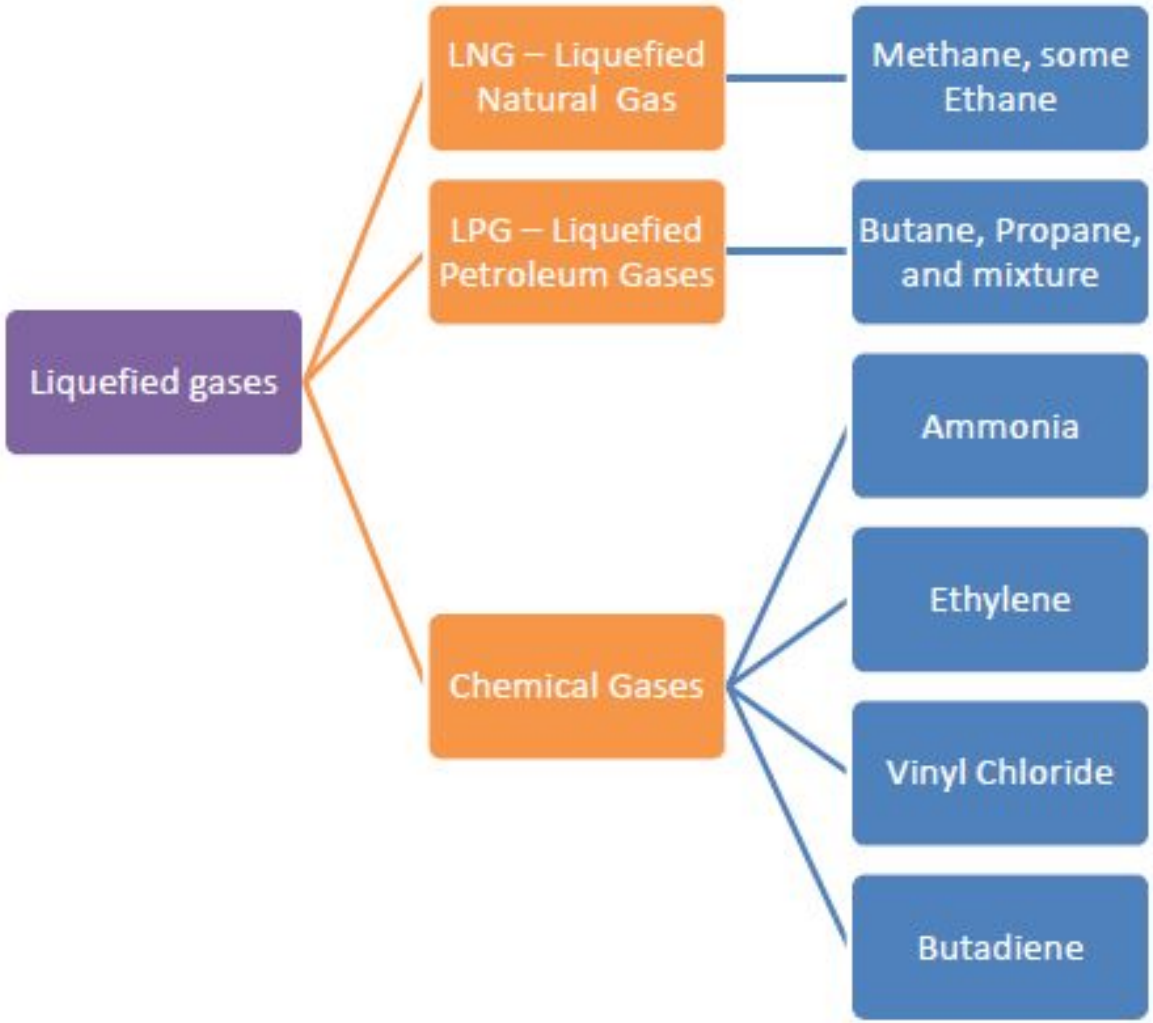
Liquefied gases
LNG – Liquefied Natural Gas
Methane, some Ethane
LPG – Liquefied Petroleum Gases
Butane, Propane, and mixture
Chemical Gases
Ammonia
Ethylene
Vinyl Chloride
Butadiene

Gas Uses

Methane	• Burned for power generation • Piped into homes for heating and cooking
Propane	• Household heating • 'Autogas' used for vehicles
Butane	• Bottled as fuel for cooking and camping • Petrol component, aerosol propellant
Ethylene	• Primarily an intermediate in the manufacture of plastics (polythene)
Propylene	• Mainly used to make polypropylene
Butadiene	• Used to produce synthetic rubber • Small amounts used to make nylon

Gas Uses

Vinyl Chloride	• Used to make PVC
Ammonia	• Used to make nitric acid for fertilizers and explosives • Refrigerant gas for large plants
Chlorine	• Water purification, disinfectant • Used in paper production, dyestuffs, paints, medicines, textiles etc

Gas tankers

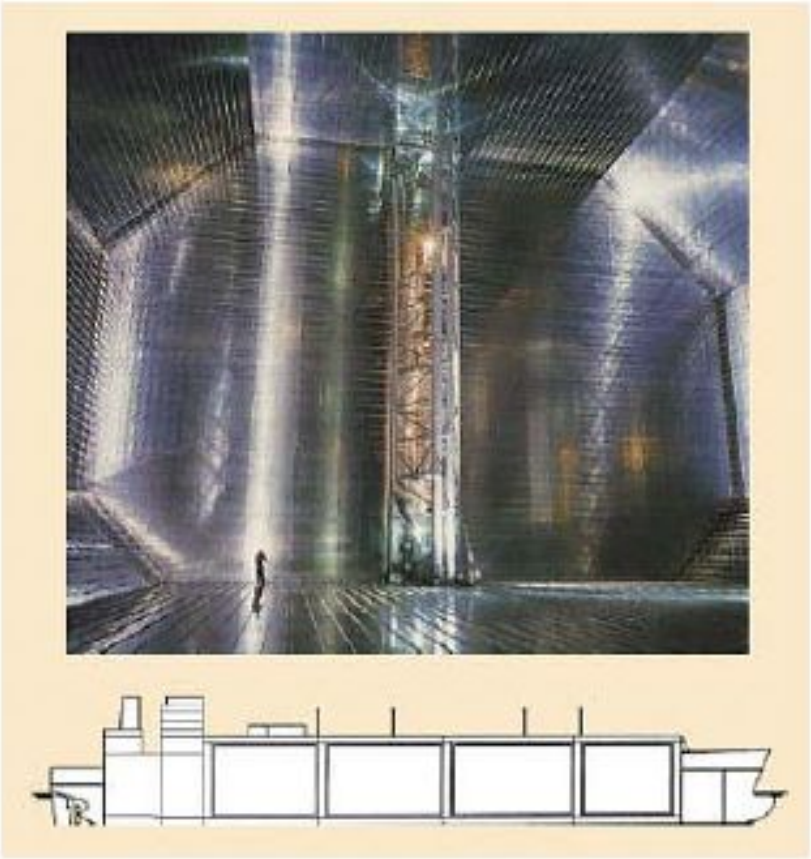

Image source: UK P&I Club

Types of Gas tankers

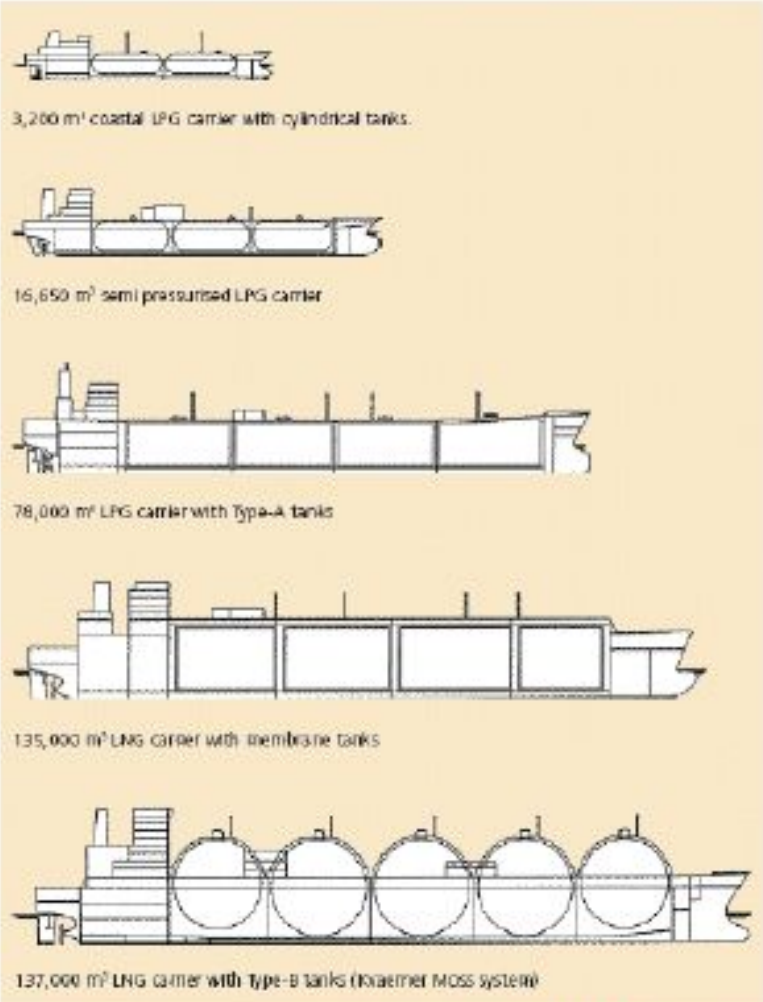

Image source: UK P&I Club

Fully pressurized ships:

- Type 'C' tanks (17.5kg/cm2 pressure)
- High pressure requires thicker tank wall
- Increased weight
- Tank shape limits optimum use of ship volume
- Small ships carrying LPG and ammonia

Semi-pressurized ships:

- Type 'C' tanks (5-8 kg/cm2 pressure)
- Require refrigeration plant and insulation
- Temperature of -48 degrees C
- Reduced tank thickness
- Provides cargo handling flexibility
- Optimum for LPG, vinyl chloride, polypropylene and butdiene

Types of Gas tankers

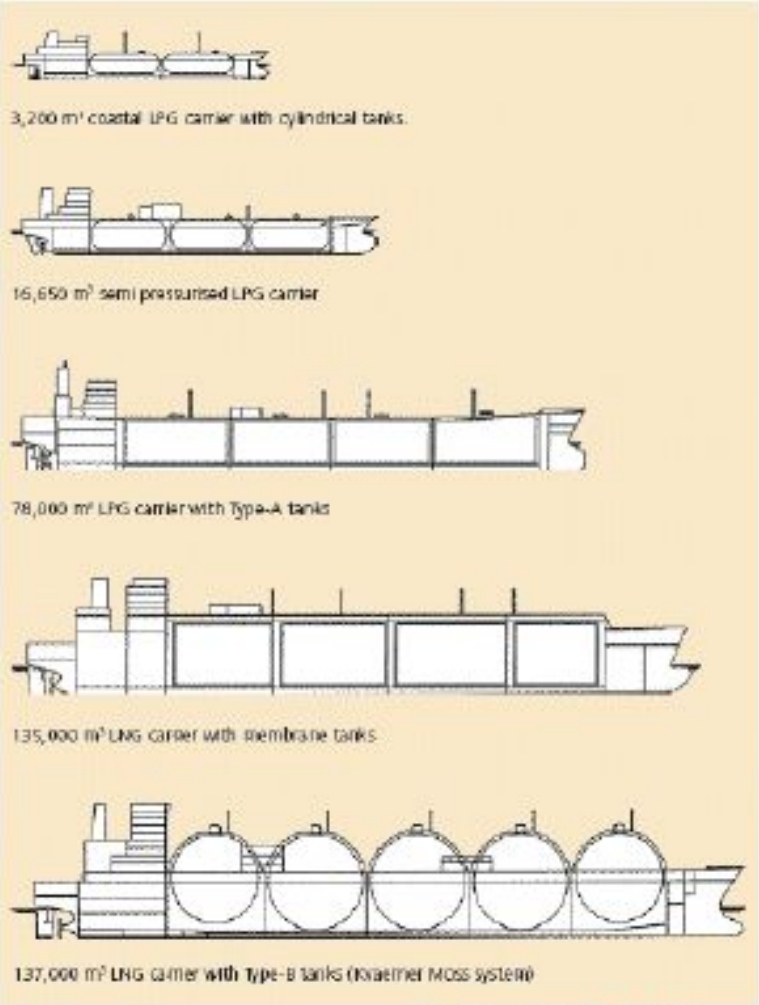

Image source: UK P&I Club

Fully refrigerated ships:

- Mostly type 'A' tanks (0.28 kg/cm2)
- Good space utilization
- Designed to transport large quantities of LPG and ammonia
- Working temperature is minimum -50 degrees C.

Ethylene ships:

- Predominantly type 'C' tanks
- Ethylene carried at -104 degrees C
- Thermal insulation and re-liquefaction plant installed
- Can carry LPG

Types of Gas tankers

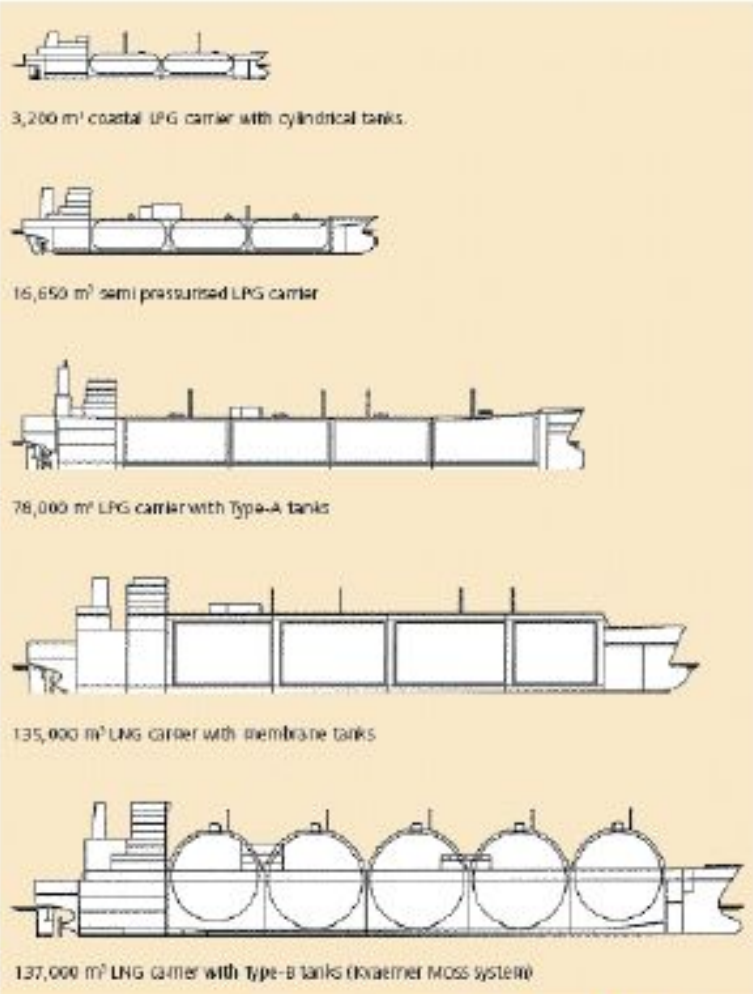

Image source: UK P&I Club

LNG ships:

- Membrane system or type 'B' tanks
- Fully insulated
- LNG carried at -162 degrees C.
- Not economic to liquefy methane on-board hence boil-off vapors are used as fuel for ship