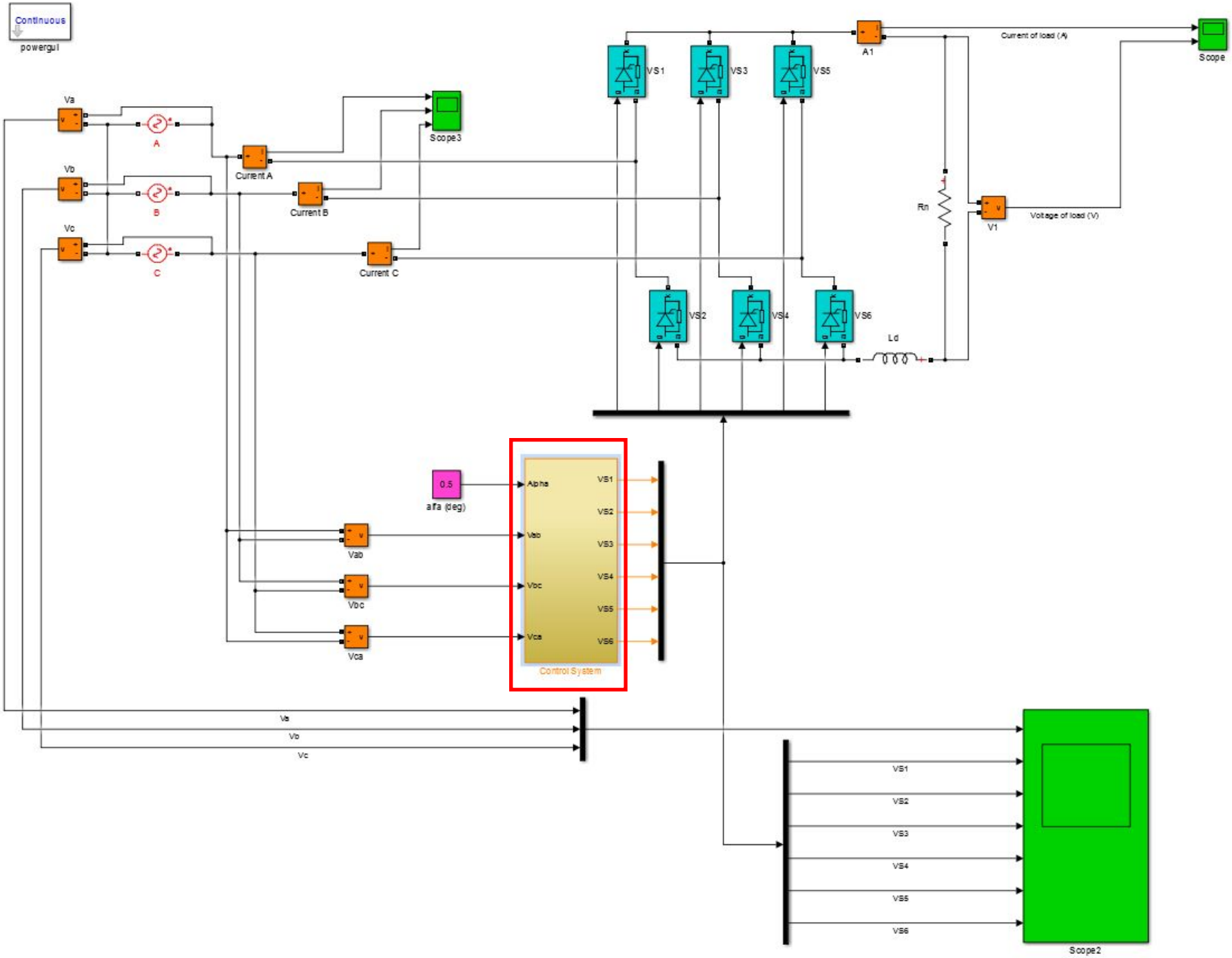
Continuous
powergui
Va
Vb
Vc
A
B
C
Current A
Current B
Current C
Scope3
VS1
VS3
VS5
VS2
VS4
VS6
A1
Current of load (A)
Scope
Rn
V1
Voltage of load (V)
Ld
0.5
alfa (deg)
Alpha
Vab
Vbc
Vca
VS1
VS2
VS3
VS4
VS5
VS6
Control System
Va
Vb
Vc
Scope2

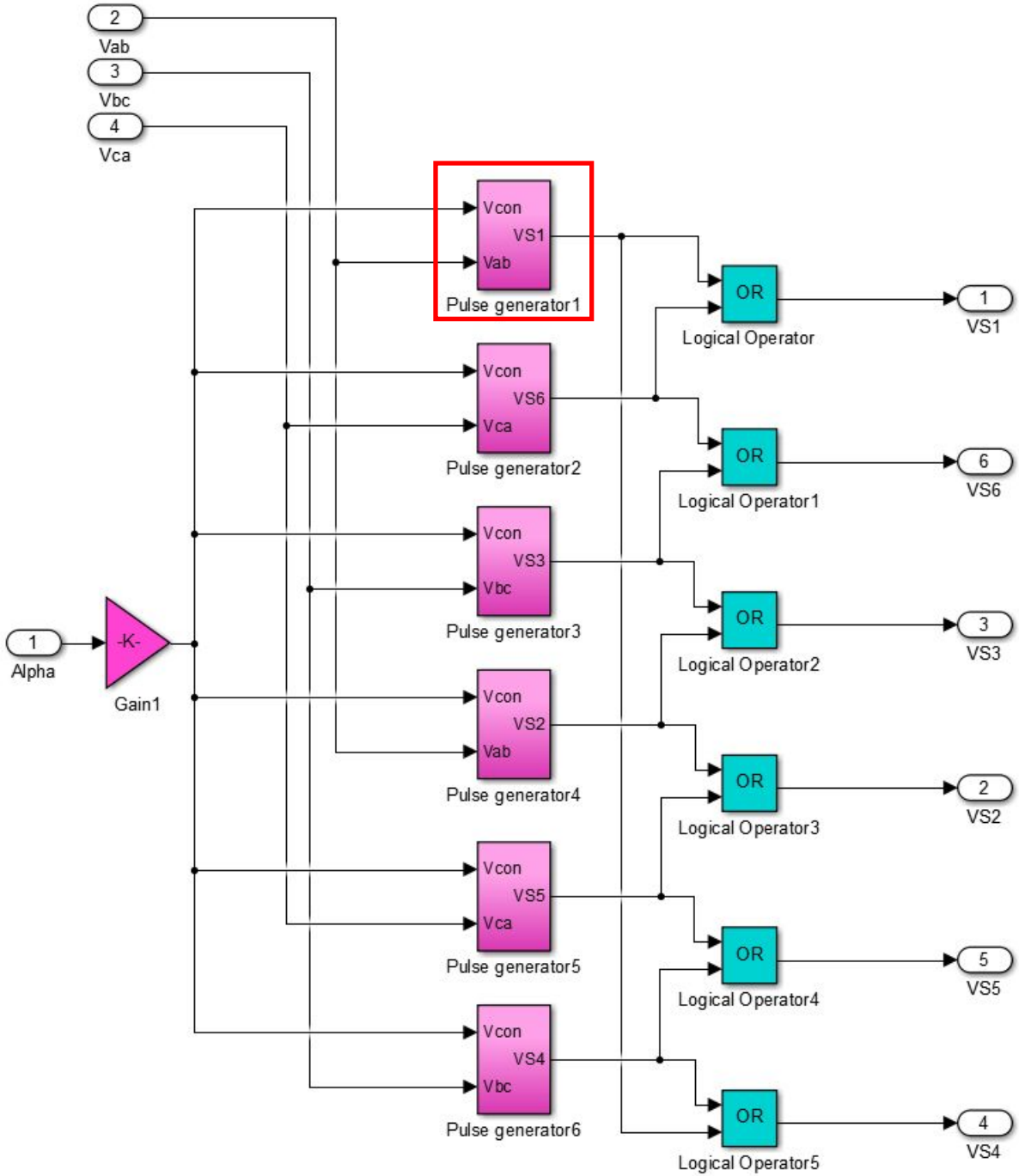
2
Vab
3
Vbc
4
Vca
1
Alpha
-K-
Gain1
Vcon
VS1
Vab
Pulse generator1
Vcon
VS6
Vca
Pulse generator2
Vcon
VS3
Vbc
Pulse generator3
Vcon
VS2
Vab
Pulse generator4
Vcon
VS5
Vca
Pulse generator5
Vcon
VS4
Vbc
Pulse generator6
OR
Logical Operator
OR
Logical Operator1
OR
Logical Operator2
OR
Logical Operator3
OR
Logical Operator4
OR
Logical Operator5
1
VS1
6
VS6
3
VS3
2
VS2
5
VS5
4
VS4

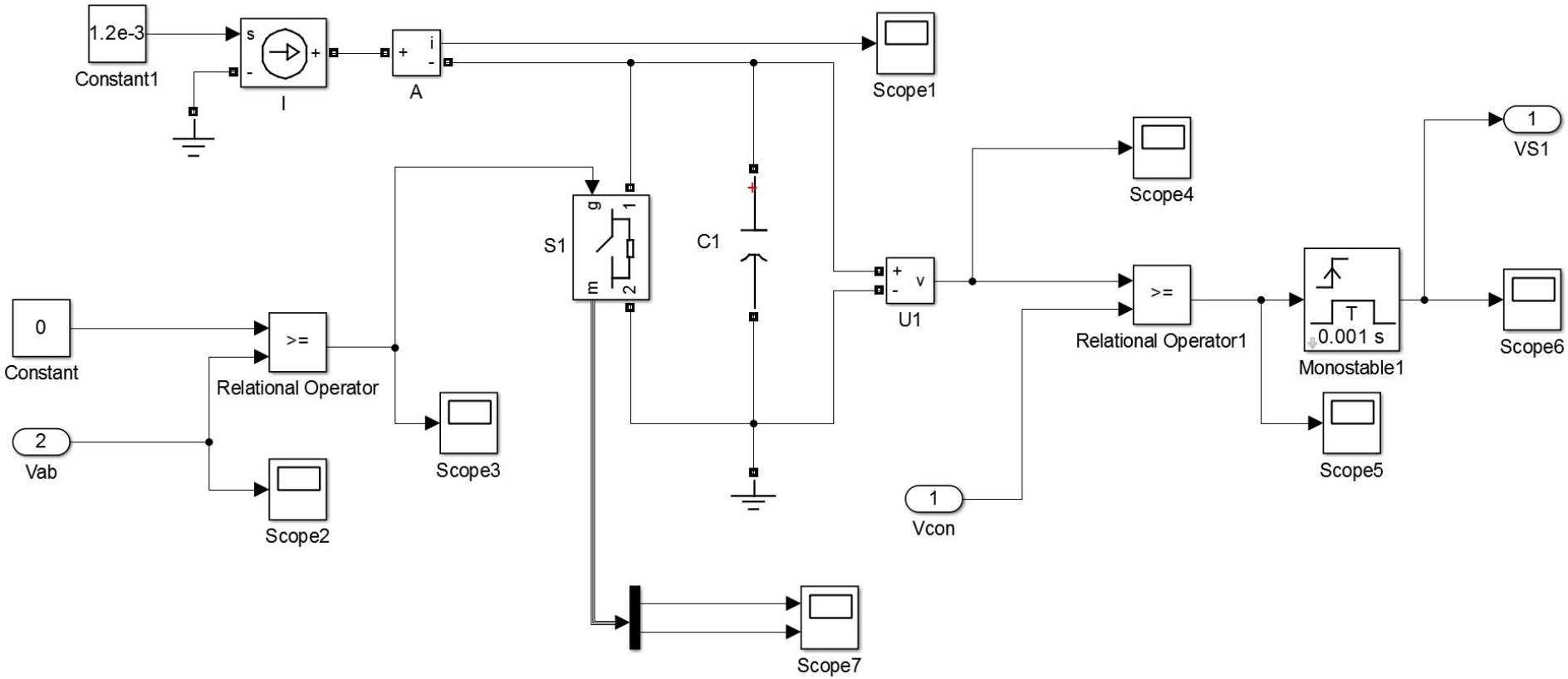
1.2e-3
Constant1
s
+
-
I
+
i
-
A
Scope1
S1
g
1
m
2
C1
+
v
-
U1
Scope4
>=
Relational Operator1
T
0.001 s
Monostable1
1
VS1
Scope6
Scope5
0
Constant
>=
Relational Operator
2
Vab
Scope3
Scope2
1
Vcon
Scope7

U_{load}, V	α, deg
	0
	30
	45
	60
	90

$$R_{\max} = \frac{U_{\alpha=0^0} \cdot R_{nom}}{U_{\alpha=45^0}}$$

$$R_{\min} = \frac{U_{\alpha=90^0} \cdot R_{nom}}{U_{\alpha=45^0}}$$

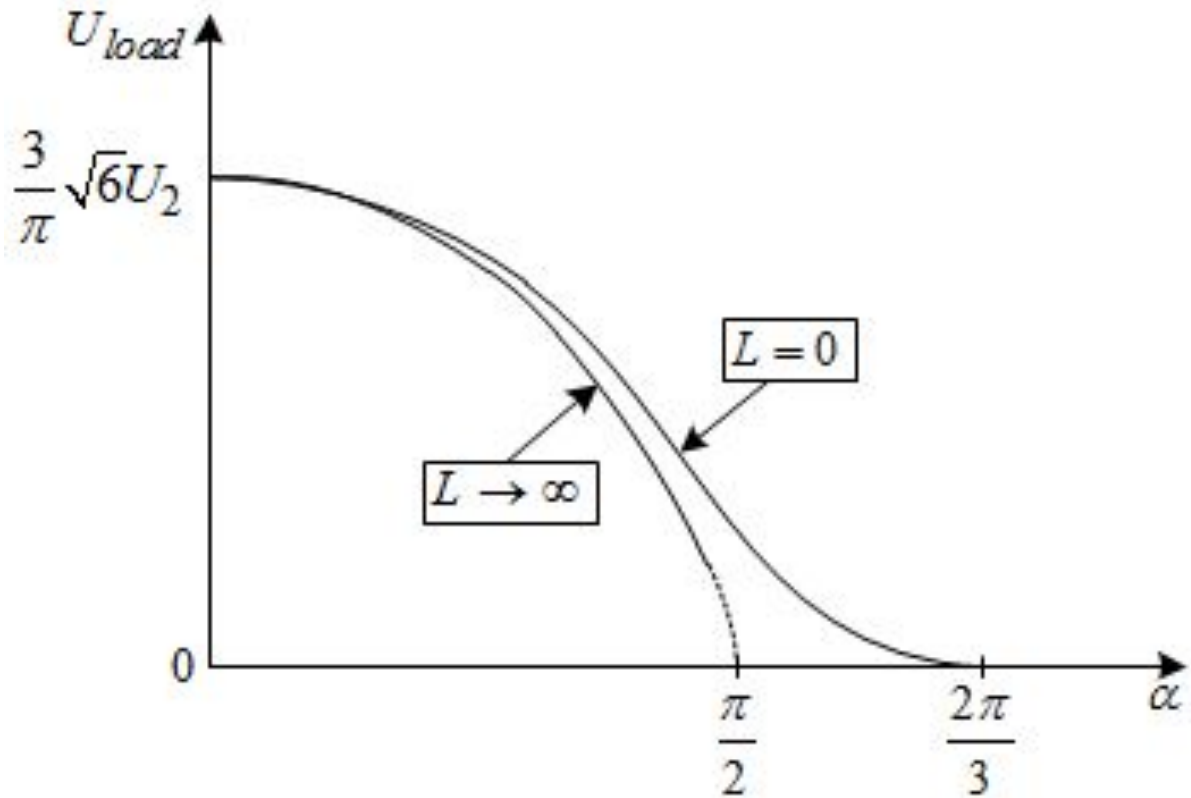

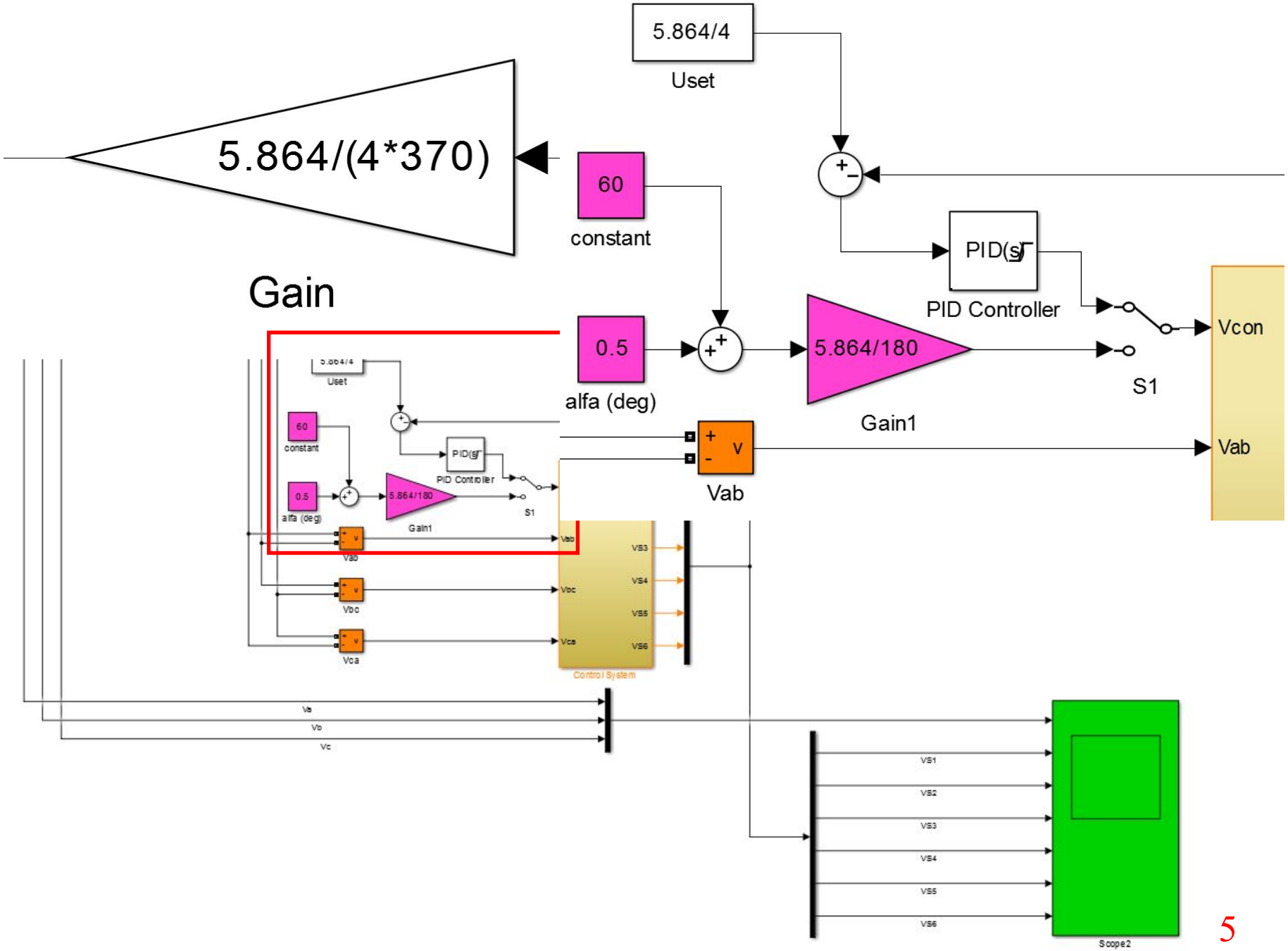
5.864/4
Uset
5.864/(4*370)
60
constant
Gain
PID(s)
PID Controller
0.5
alfa (deg)
5.864/180
Gain1
S1
Vcon
Vab
Vab
Vbc
Vca
Control System
Va
Vb
Vc
VS1
VS2
VS3
VS4
VS5
VS6
Scope2

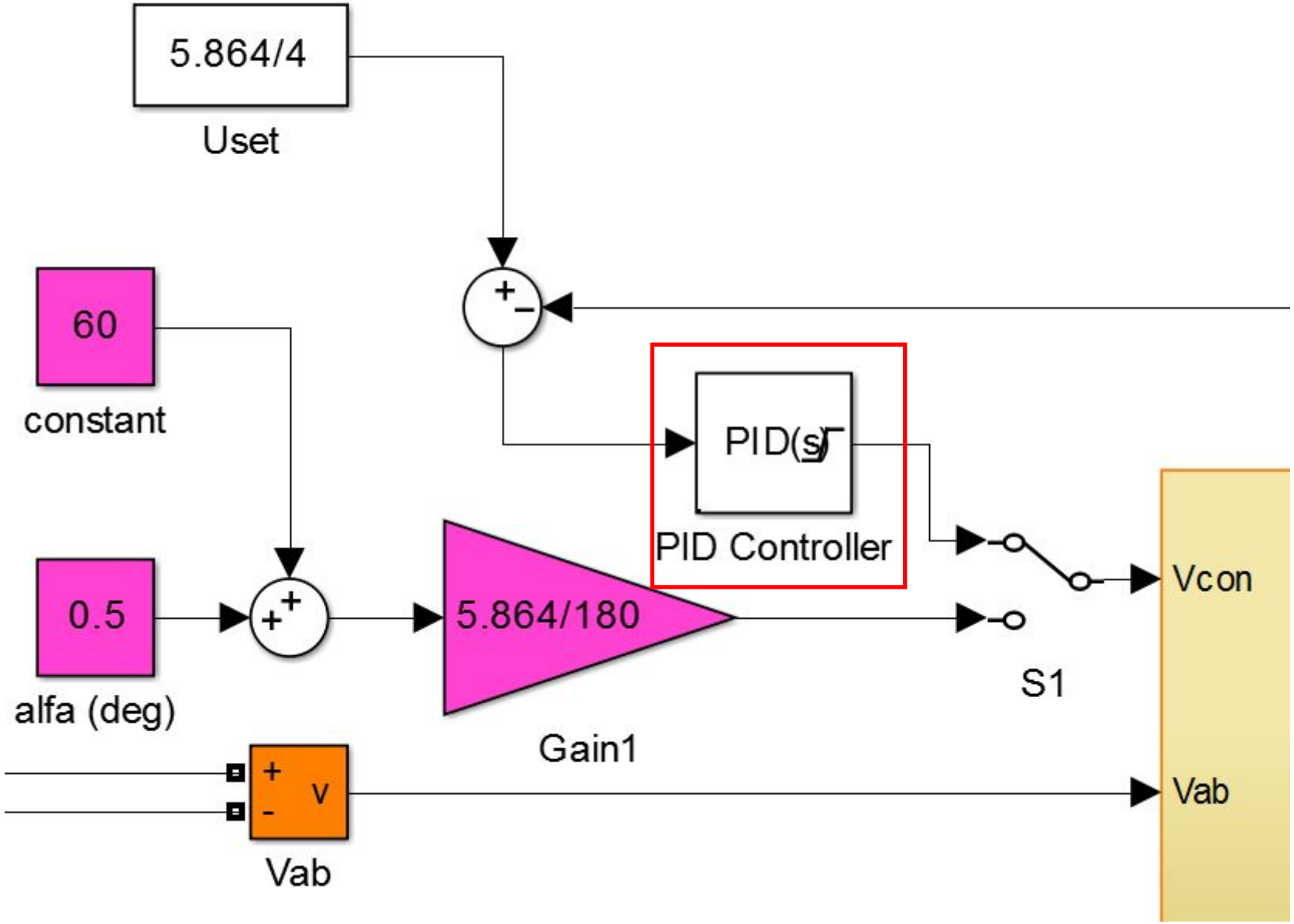
5.864/4
Uset
60
constant
0.5
alfa (deg)
PID(s)
PID Controller
5.864/180
Gain1
S1
Vcon
Vab
Vab

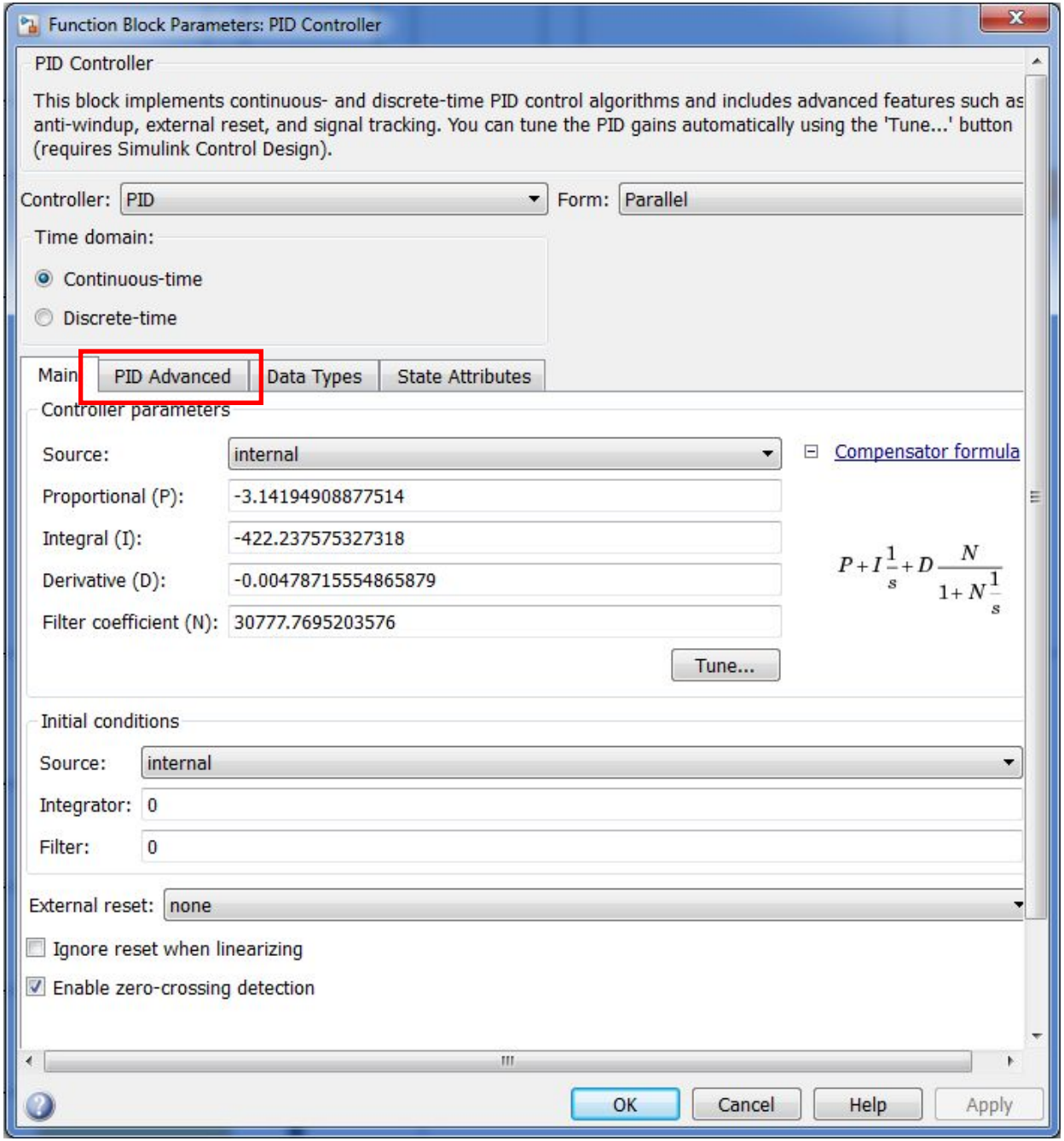
Function Block Parameters: PID Controller
PID Controller
This block implements continuous- and discrete-time PID control algorithms and includes advanced features such as anti-windup, external reset, and signal tracking. You can tune the PID gains automatically using the 'Tune...' button (requires Simulink Control Design).
Controller: PID
Form: Parallel
Time domain:
Continuous-time
Discrete-time
Main
PID Advanced
Data Types
State Attributes
Controller parameters
Source: internal
Compensator formula
Proportional (P): -3.14194908877514
Integral (I): -422.237575327318
Derivative (D): -0.00478715554865879
Filter coefficient (N): 30777.7695203576
$P + I\frac{1}{s} + D\frac{N}{1+N\frac{1}{s}}$
Tune...
Initial conditions
Source: internal
Integrator: 0
Filter: 0
External reset: none
Ignore reset when linearizing
Enable zero-crossing detection
OK
Cancel
Help
Apply

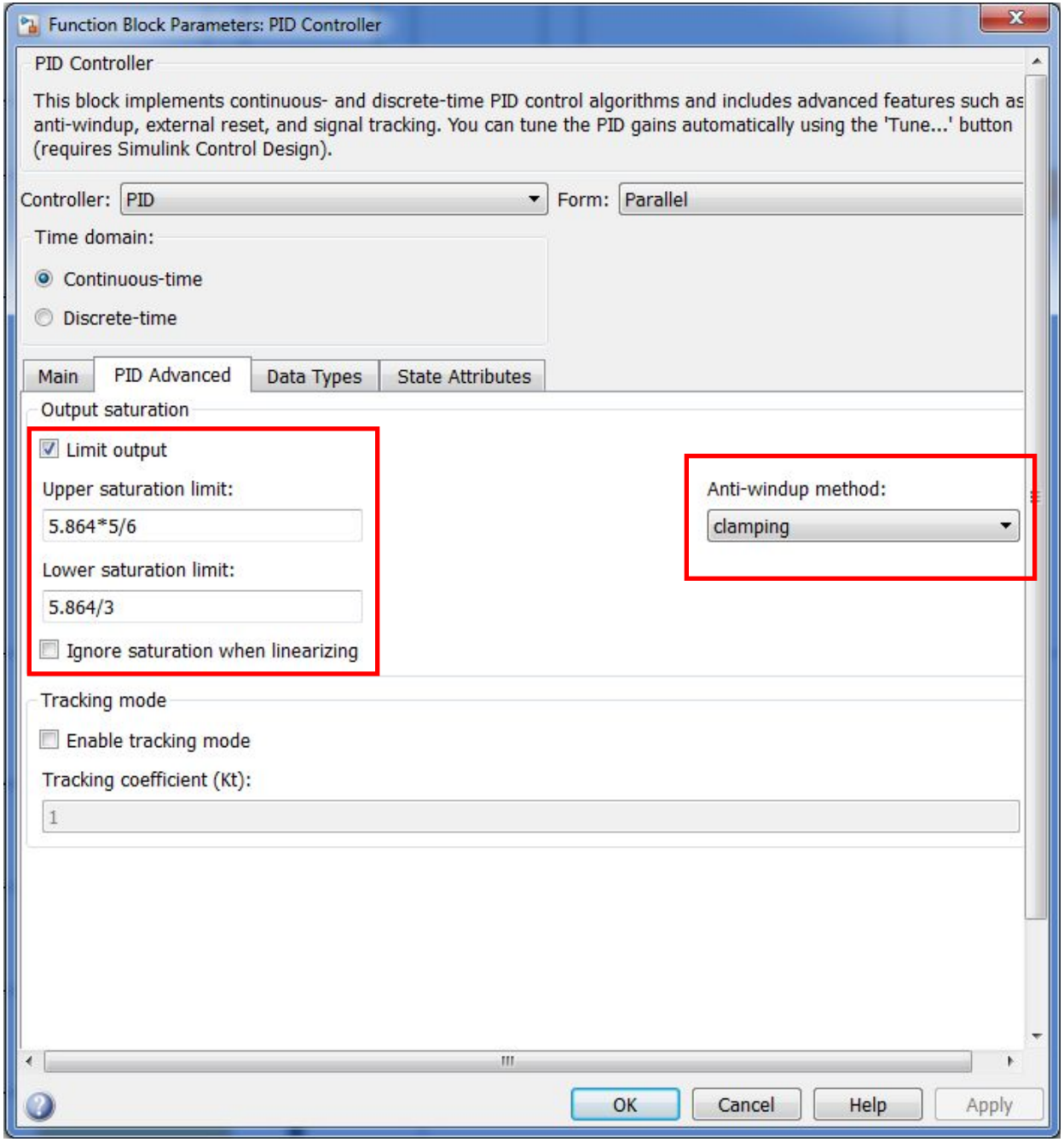
Function Block Parameters: PID Controller
PID Controller
This block implements continuous- and discrete-time PID control algorithms and includes advanced features such as anti-windup, external reset, and signal tracking. You can tune the PID gains automatically using the 'Tune...' button (requires Simulink Control Design).
Controller: PID
Form: Parallel
Time domain:
Continuous-time
Discrete-time
Main
PID Advanced
Data Types
State Attributes
Output saturation
Limit output
Upper saturation limit:
5.864*5/6
Lower saturation limit:
5.864/3
Ignore saturation when linearizing
Anti-windup method:
clamping
Tracking mode
Enable tracking mode
Tracking coefficient (Kt):
1
OK
Cancel
Help
Apply

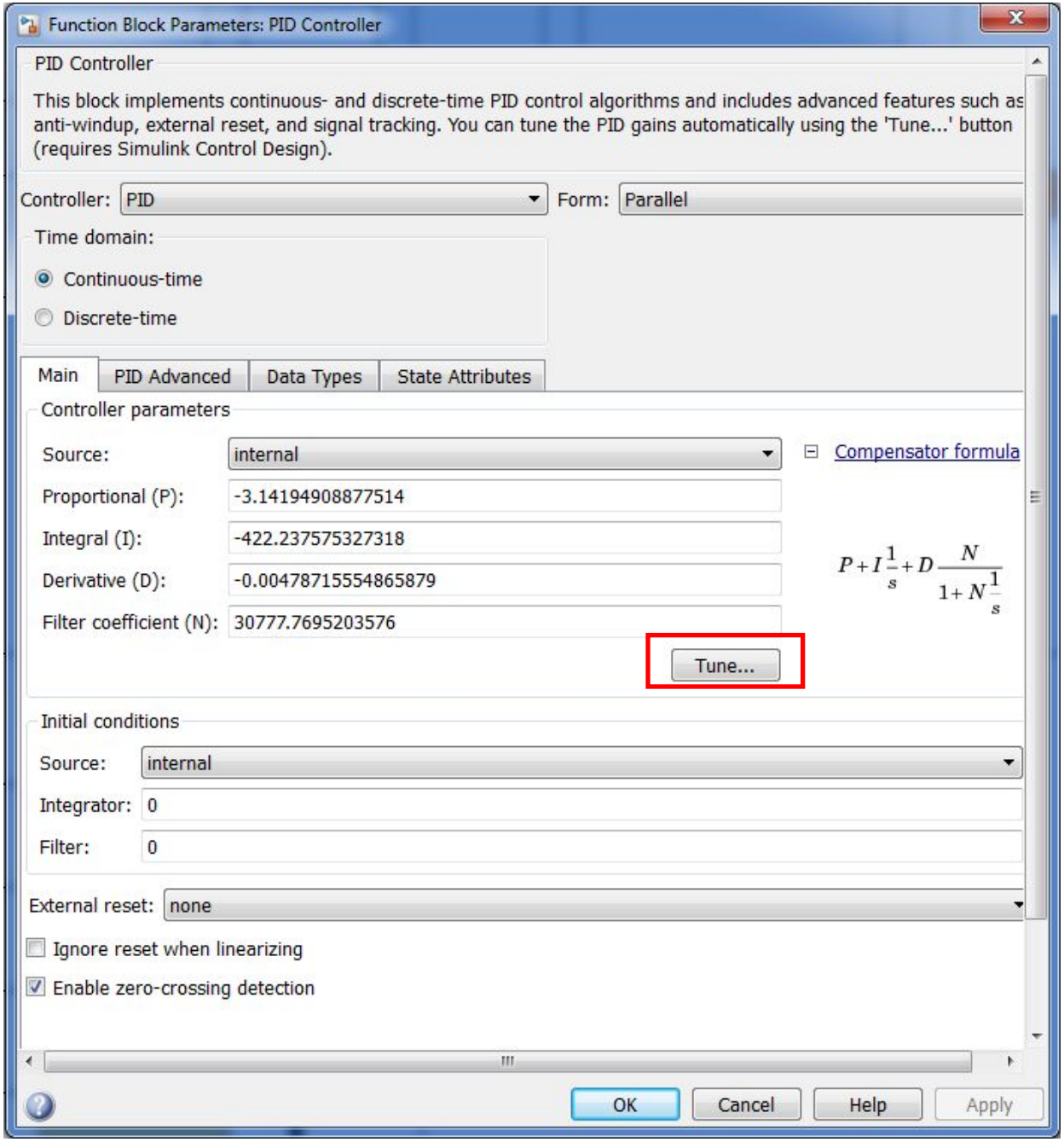
Function Block Parameters: PID Controller
PID Controller
This block implements continuous- and discrete-time PID control algorithms and includes advanced features such as anti-windup, external reset, and signal tracking. You can tune the PID gains automatically using the 'Tune...' button (requires Simulink Control Design).
Controller: PID
Form: Parallel
Time domain:
Continuous-time
Discrete-time
Main
PID Advanced
Data Types
State Attributes
Controller parameters
Source: internal
Compensator formula
Proportional (P): -3.14194908877514
Integral (I): -422.237575327318
Derivative (D): -0.00478715554865879
Filter coefficient (N): 30777.7695203576
$P + I\frac{1}{s} + D\frac{N}{1+N\frac{1}{s}}$
Tune...
Initial conditions
Source: internal
Integrator: 0
Filter: 0
External reset: none
Ignore reset when linearizing
Enable zero-crossing detection
OK
Cancel
Help
Apply

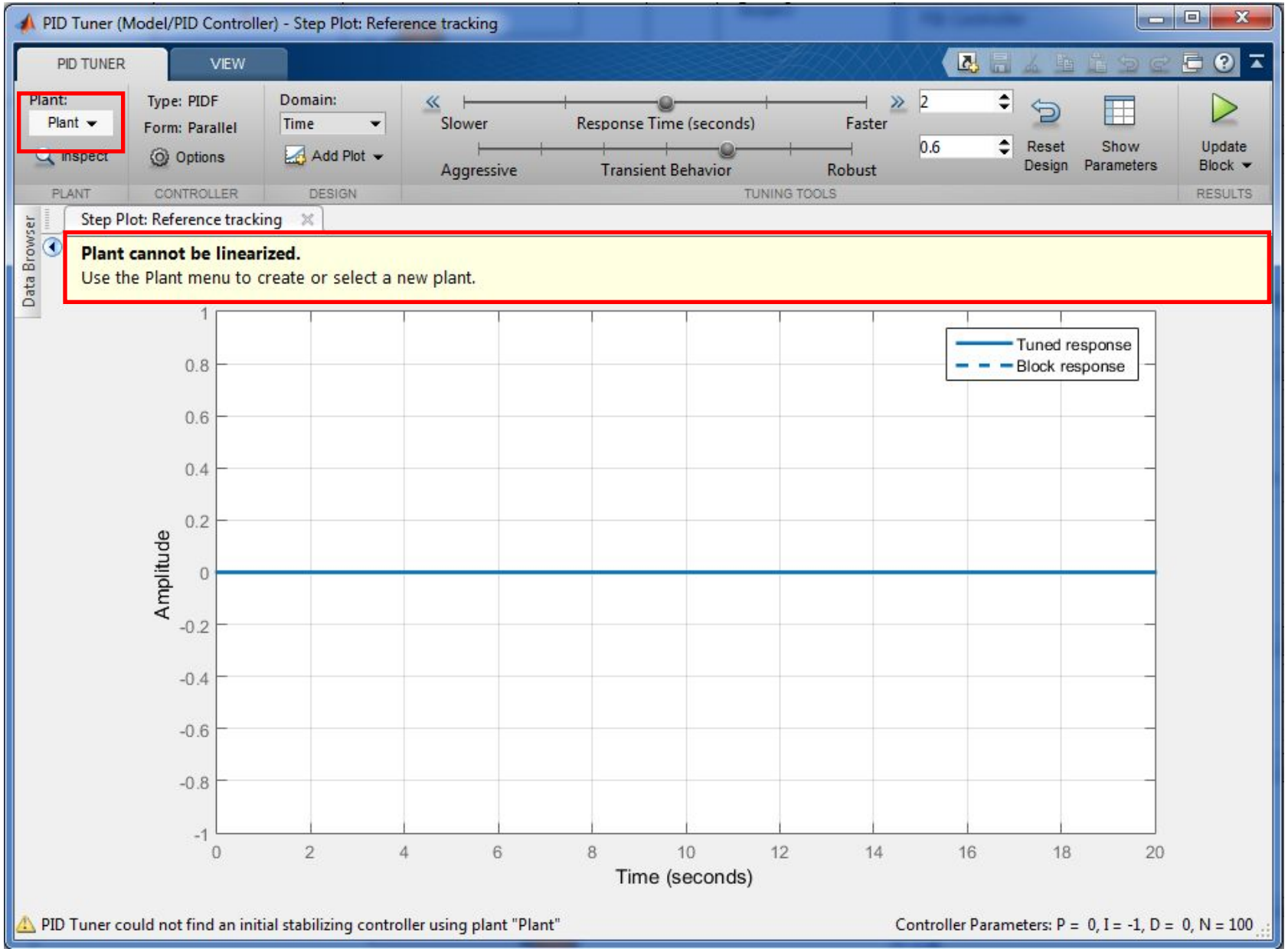
PID Tuner (Model/PID Controller) - Step Plot: Reference tracking
PID TUNER
VIEW
Plant:
Plant
Inspect
PLANT
Type: PIDF
Form: Parallel
Options
CONTROLLER
Domain:
Time
Add Plot
DESIGN
Slower
Response Time (seconds)
Faster
Aggressive
Transient Behavior
Robust
2
0.6
Reset Design
Show Parameters
TUNING TOOLS
Update Block
RESULTS
Data Browser
Step Plot: Reference tracking
Plant cannot be linearized.
Use the Plant menu to create or select a new plant.
Tuned response
Block response
Amplitude
Time (seconds)
PID Tuner could not find an initial stabilizing controller using plant "Plant"
Controller Parameters: P = 0, I = -1, D = 0, N = 100

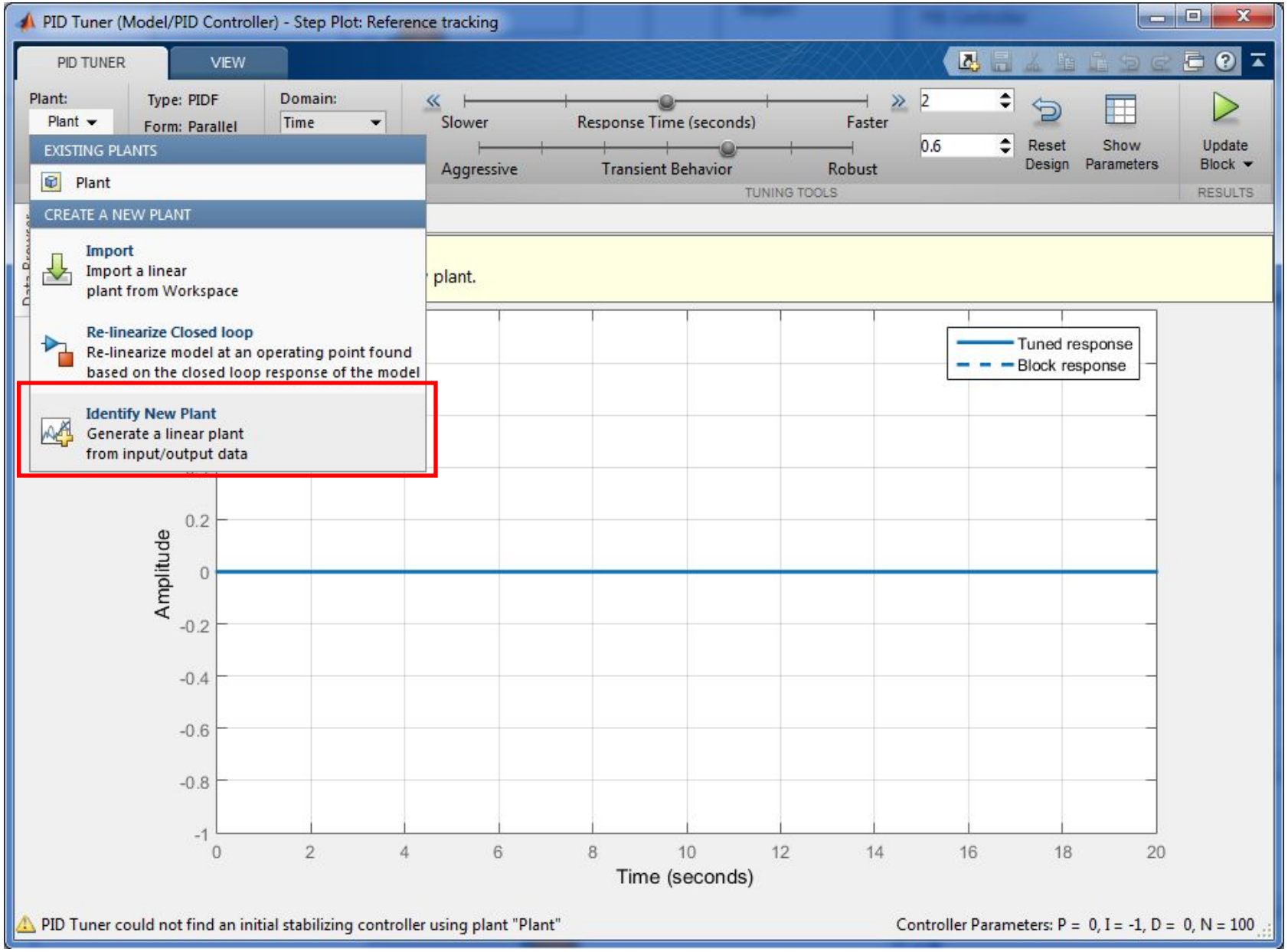
PID Tuner (Model/PID Controller) - Step Plot: Reference tracking
PID TUNER
VIEW
Plant:
Plant
Type: PIDF
Form: Parallel
Domain:
Time
Slower
Response Time (seconds)
Faster
2
Aggressive
Transient Behavior
Robust
0.6
Reset Design
Show Parameters
Update Block
TUNING TOOLS
RESULTS
EXISTING PLANTS
Plant
CREATE A NEW PLANT
Import
Import a linear plant from Workspace
Re-linearize Closed loop
Re-linearize model at an operating point found based on the closed loop response of the model
Identify New Plant
Generate a linear plant from input/output data
plant.
Tuned response
Block response
Amplitude
Time (seconds)
PID Tuner could not find an initial stabilizing controller using plant "Plant"
Controller Parameters: P = 0, I = -1, D = 0, N = 100

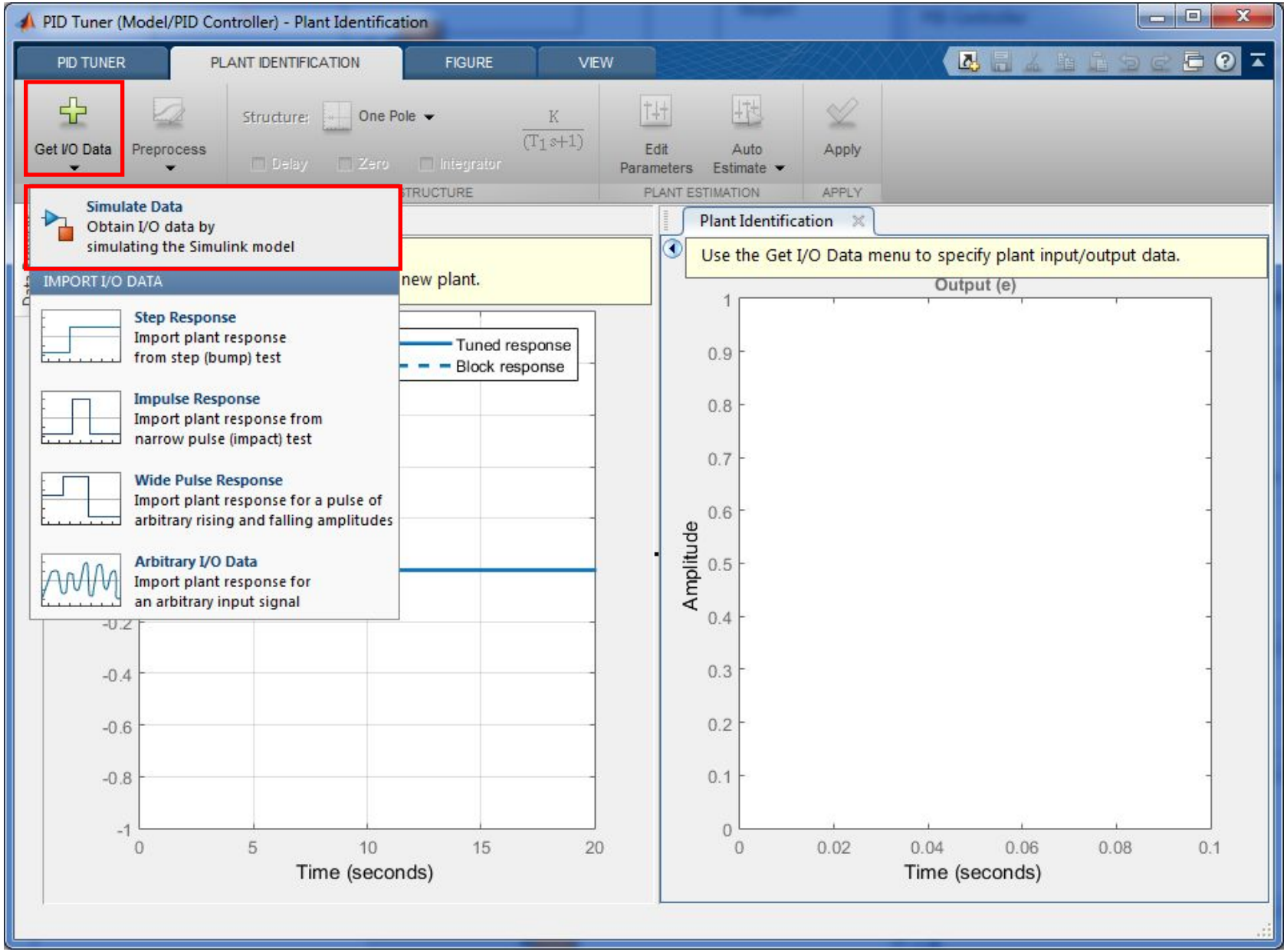
PID Tuner (Model/PID Controller) - Plant Identification
PID TUNER
PLANT IDENTIFICATION
FIGURE
VIEW
Get I/O Data
Preprocess
Structure:
One Pole
Delay
Zero
Integrator
Edit Parameters
Auto Estimate
Apply
PLANT ESTIMATION
APPLY
Simulate Data
Obtain I/O data by simulating the Simulink model
IMPORT I/O DATA
Step Response
Import plant response from step (bump) test
Impulse Response
Import plant response from narrow pulse (impact) test
Wide Pulse Response
Import plant response for a pulse of arbitrary rising and falling amplitudes
Arbitrary I/O Data
Import plant response for an arbitrary input signal
new plant.
Tuned response
Block response
Time (seconds)
Plant Identification
Use the Get I/O Data menu to specify plant input/output data.
Output (e)
Amplitude
Time (seconds)

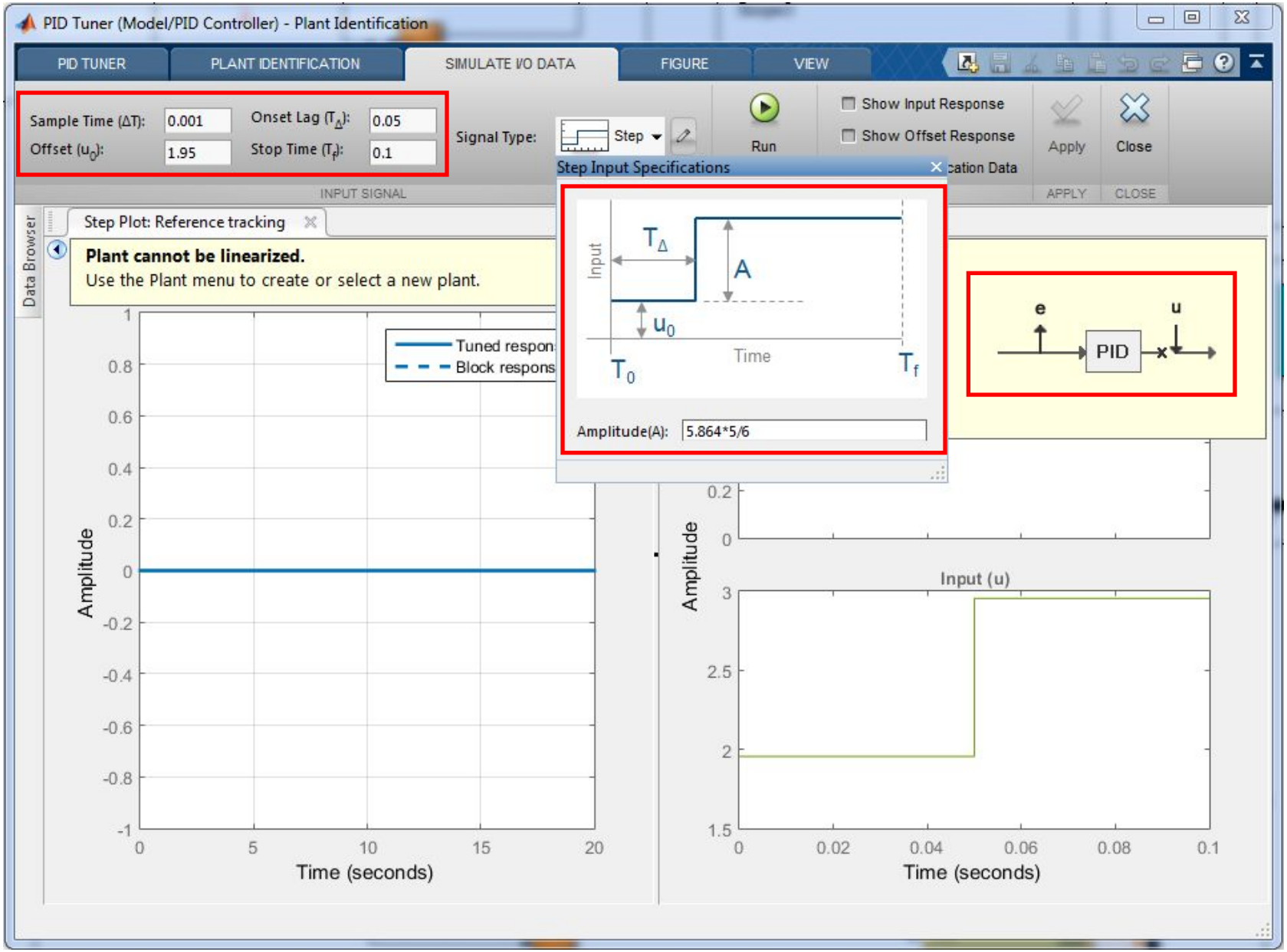
PID Tuner (Model/PID Controller) - Plant Identification
PID TUNER
PLANT IDENTIFICATION
SIMULATE I/O DATA
FIGURE
VIEW
Sample Time (ΔT): 0.001
Onset Lag (TΔ): 0.05
Offset (u0): 1.95
Stop Time (Tf): 0.1
INPUT SIGNAL
Signal Type:
Step
Run
Show Input Response
Show Offset Response
Apply
Close
APPLY
CLOSE
Step Input Specifications
Input
TΔ
A
u0
T0
Time
Tf
Amplitude(A): 5.864*5/6
Data Browser
Step Plot: Reference tracking
Plant cannot be linearized.
Use the Plant menu to create or select a new plant.
e
u
PID
Tuned respon
Block respons
Amplitude
Time (seconds)
Input (u)
Amplitude
Time (seconds)

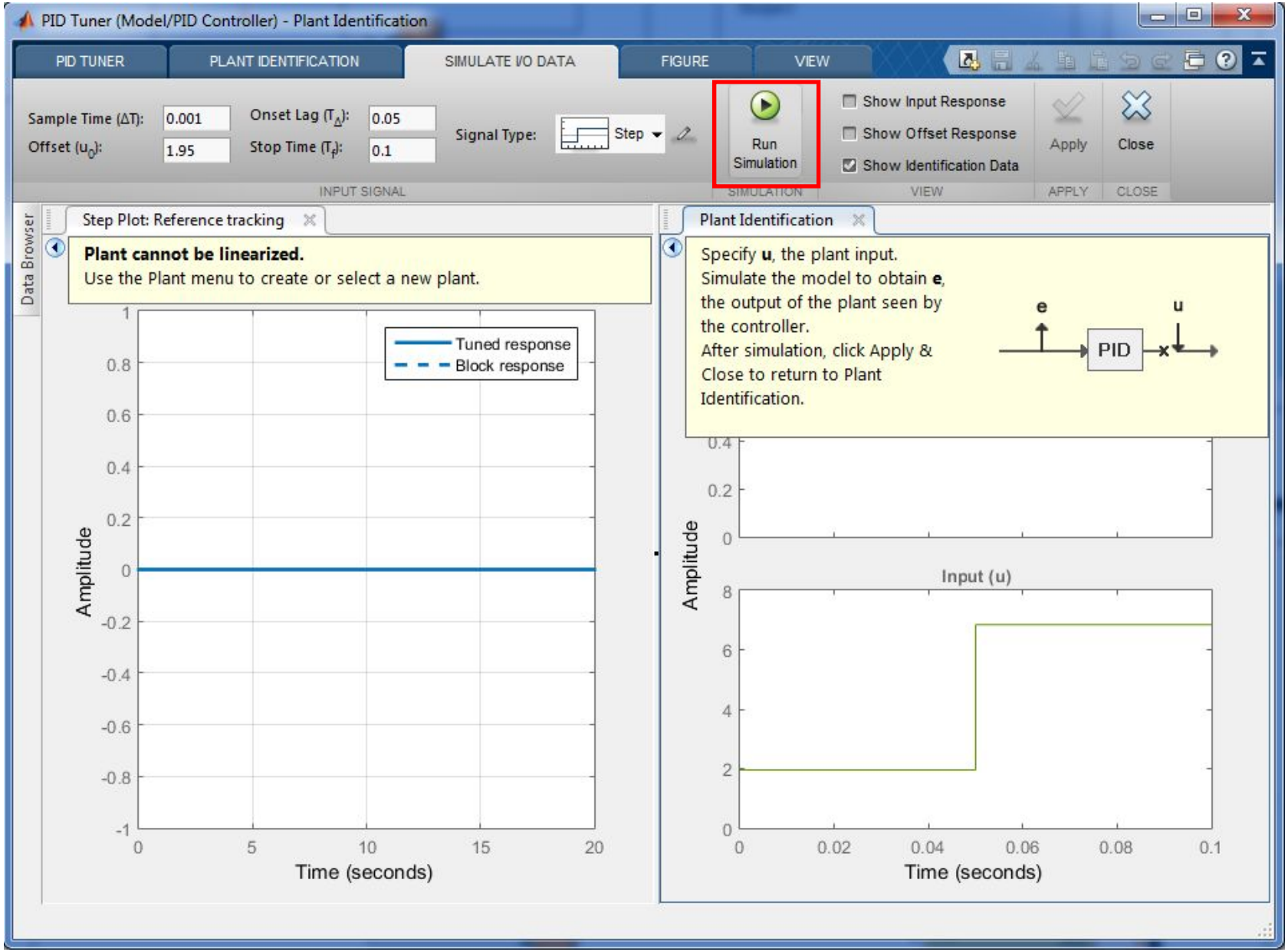
PID Tuner (Model/PID Controller) - Plant Identification
PID TUNER
PLANT IDENTIFICATION
SIMULATE I/O DATA
FIGURE
VIEW
Sample Time (ΔT): 0.001
Offset (u0): 1.95
Onset Lag (TΔ): 0.05
Stop Time (Tf): 0.1
Signal Type:
Step
INPUT SIGNAL
Run Simulation
SIMULATION
Show Input Response
Show Offset Response
Show Identification Data
VIEW
Apply
APPLY
Close
CLOSE
Data Browser
Step Plot: Reference tracking
Plant cannot be linearized.
Use the Plant menu to create or select a new plant.
Tuned response
Block response
Amplitude
Time (seconds)
Plant Identification
Specify u, the plant input.
Simulate the model to obtain e, the output of the plant seen by the controller.
After simulation, click Apply & Close to return to Plant Identification.
e
u
PID
Input (u)
Amplitude
Time (seconds)

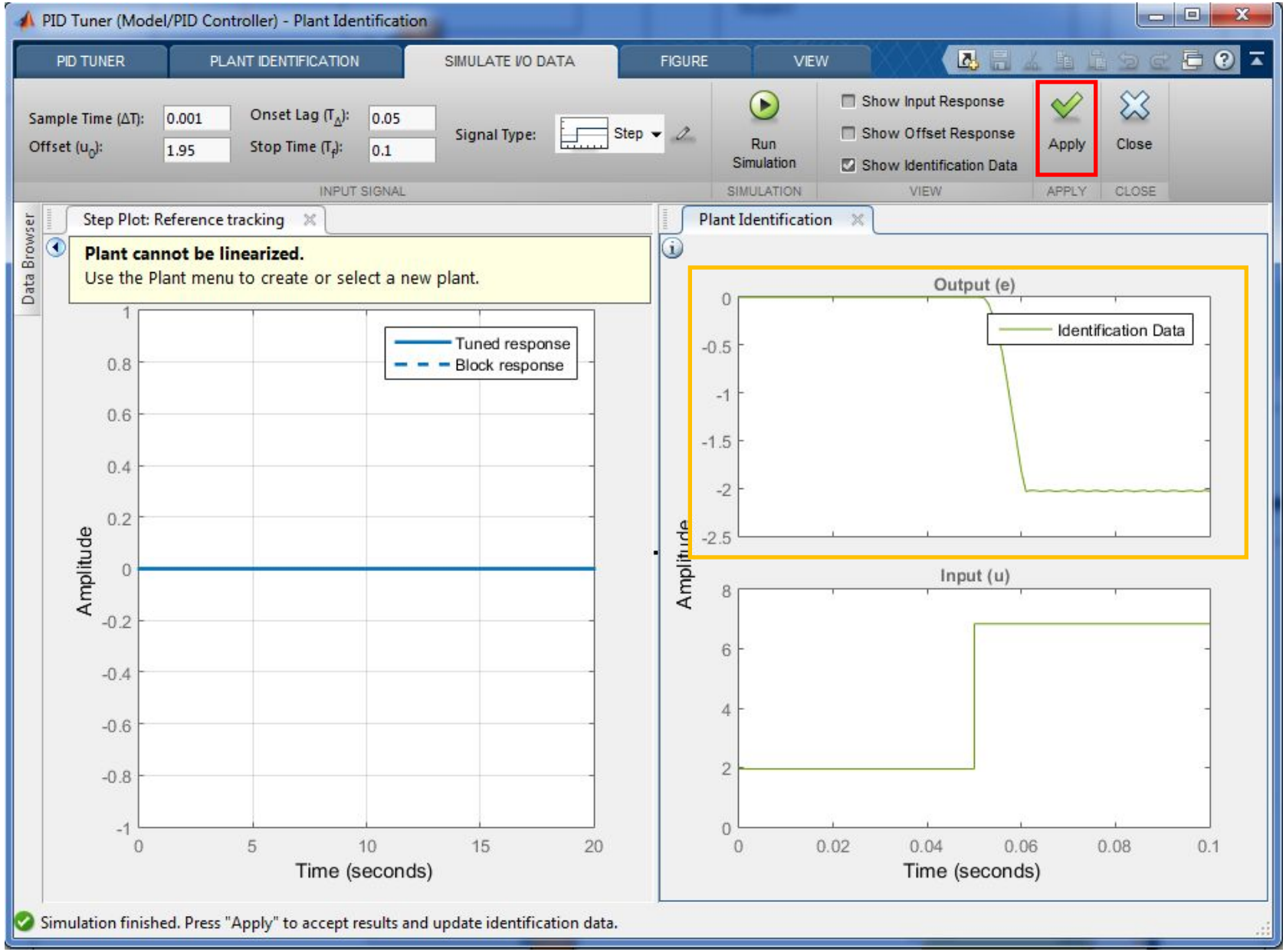
PID Tuner (Model/PID Controller) - Plant Identification
PID TUNER
PLANT IDENTIFICATION
SIMULATE I/O DATA
FIGURE
VIEW
Sample Time (ΔT): 0.001
Offset (u0): 1.95
Onset Lag (TΔ): 0.05
Stop Time (Tf): 0.1
Signal Type: Step
INPUT SIGNAL
Run Simulation
SIMULATION
Show Input Response
Show Offset Response
Show Identification Data
VIEW
Apply
APPLY
Close
CLOSE
Data Browser
Step Plot: Reference tracking
Plant cannot be linearized.
Use the Plant menu to create or select a new plant.
Tuned response
Block response
Amplitude
Time (seconds)
Plant Identification
Output (e)
Identification Data
Input (u)
Amplitude
Time (seconds)
Simulation finished. Press "Apply" to accept results and update identification data.

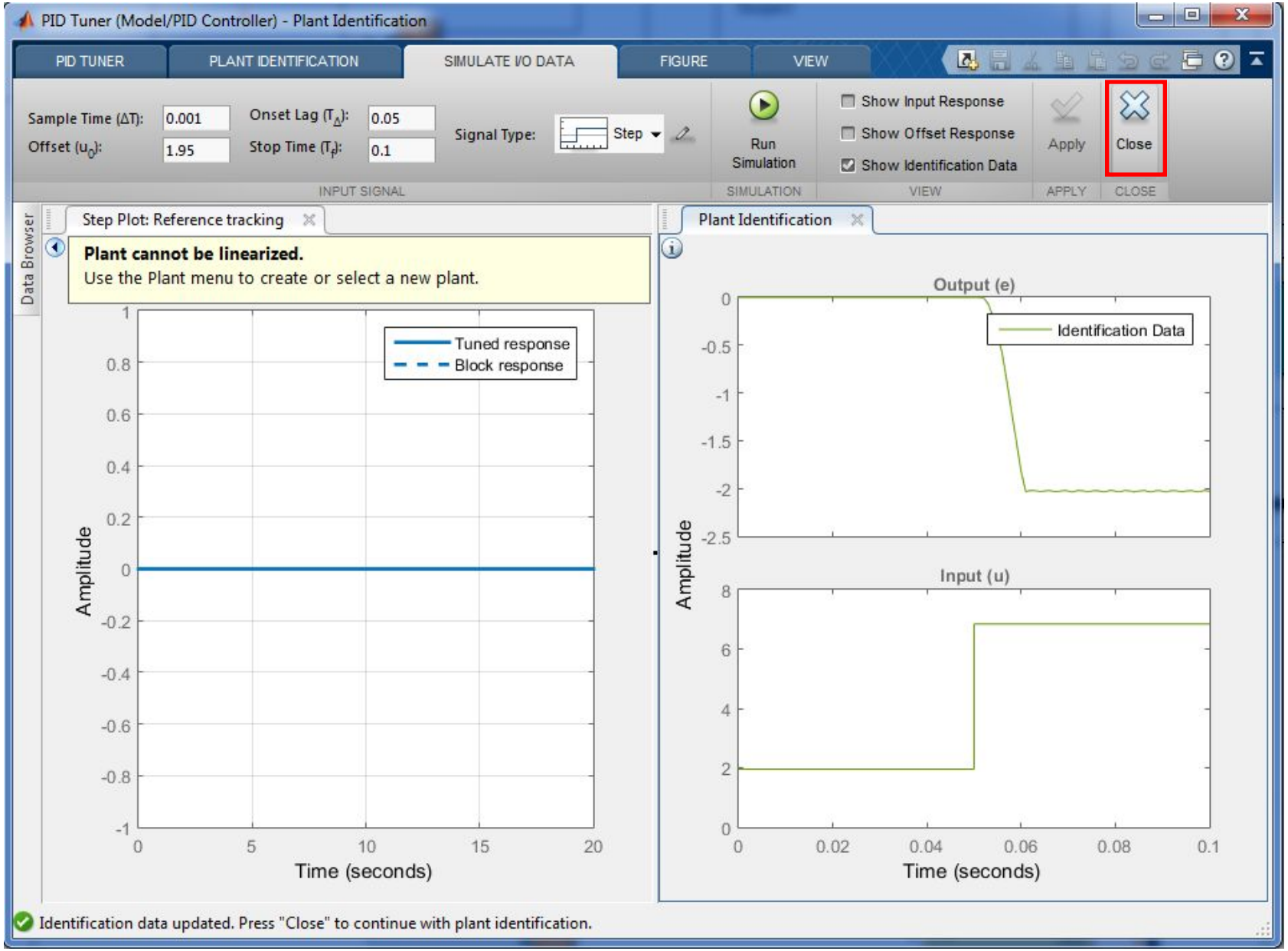
PID Tuner (Model/PID Controller) - Plant Identification
PID TUNER
PLANT IDENTIFICATION
SIMULATE I/O DATA
FIGURE
VIEW
Sample Time (ΔT): 0.001
Offset (u0): 1.95
Onset Lag (TΔ): 0.05
Stop Time (Tf): 0.1
Signal Type: Step
INPUT SIGNAL
Run Simulation
SIMULATION
Show Input Response
Show Offset Response
Show Identification Data
VIEW
Apply
APPLY
Close
CLOSE
Data Browser
Step Plot: Reference tracking
Plant cannot be linearized.
Use the Plant menu to create or select a new plant.
Tuned response
Block response
Amplitude
Time (seconds)
Plant Identification
Output (e)
Identification Data
Input (u)
Amplitude
Time (seconds)
Identification data updated. Press "Close" to continue with plant identification.

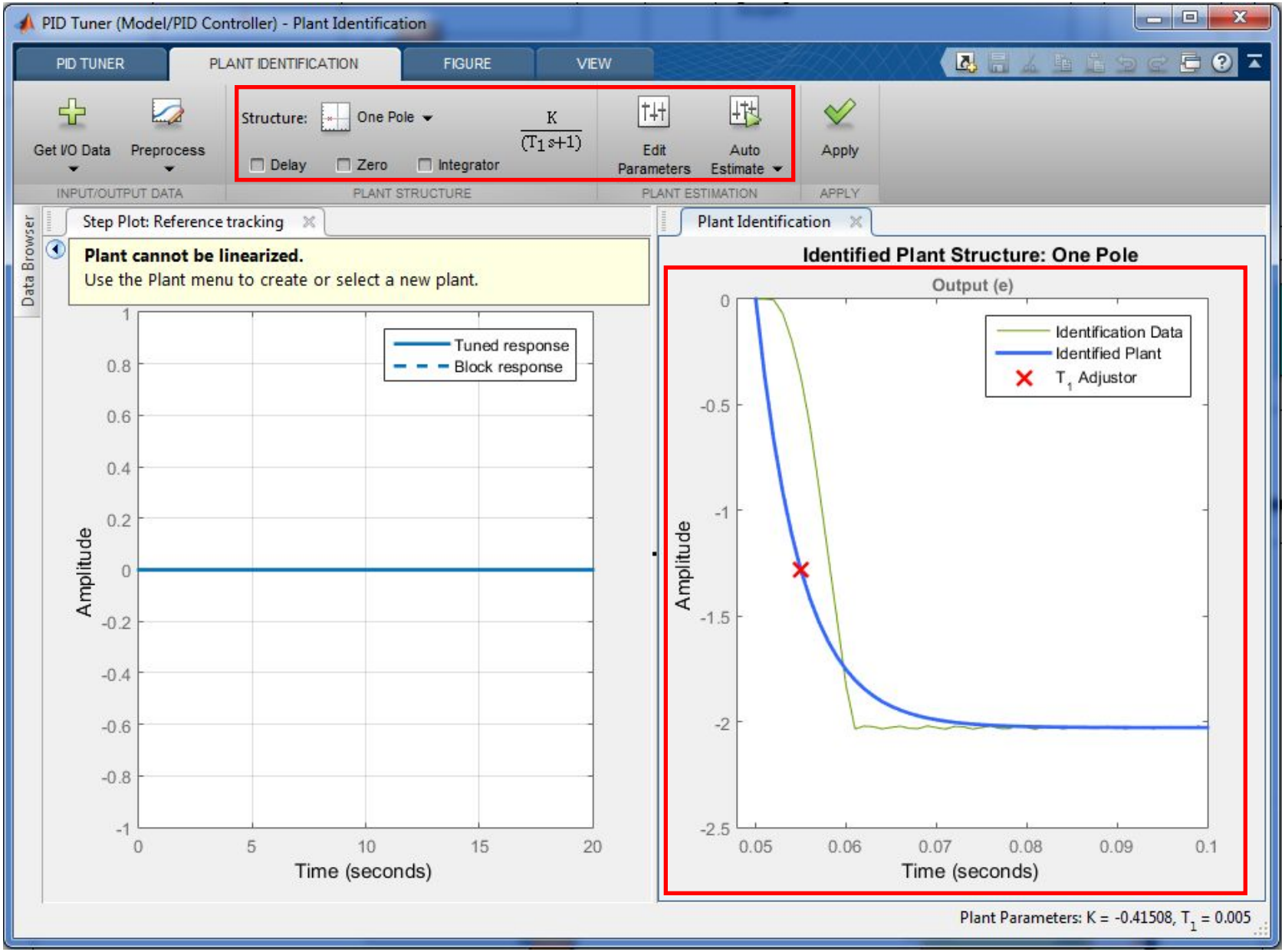
PID Tuner (Model/PID Controller) - Plant Identification
PID TUNER
PLANT IDENTIFICATION
FIGURE
VIEW
Get I/O Data
Preprocess
INPUT/OUTPUT DATA
Structure:
One Pole
K / (T1 s+1)
Delay
Zero
Integrator
PLANT STRUCTURE
Edit Parameters
Auto Estimate
PLANT ESTIMATION
Apply
APPLY
Data Browser
Step Plot: Reference tracking
Plant cannot be linearized.
Use the Plant menu to create or select a new plant.
Tuned response
Block response
Amplitude
Time (seconds)
Plant Identification
Identified Plant Structure: One Pole
Output (e)
Identification Data
Identified Plant
T1 Adjustor
Amplitude
Time (seconds)
Plant Parameters: K = -0.41508, T1 = 0.005

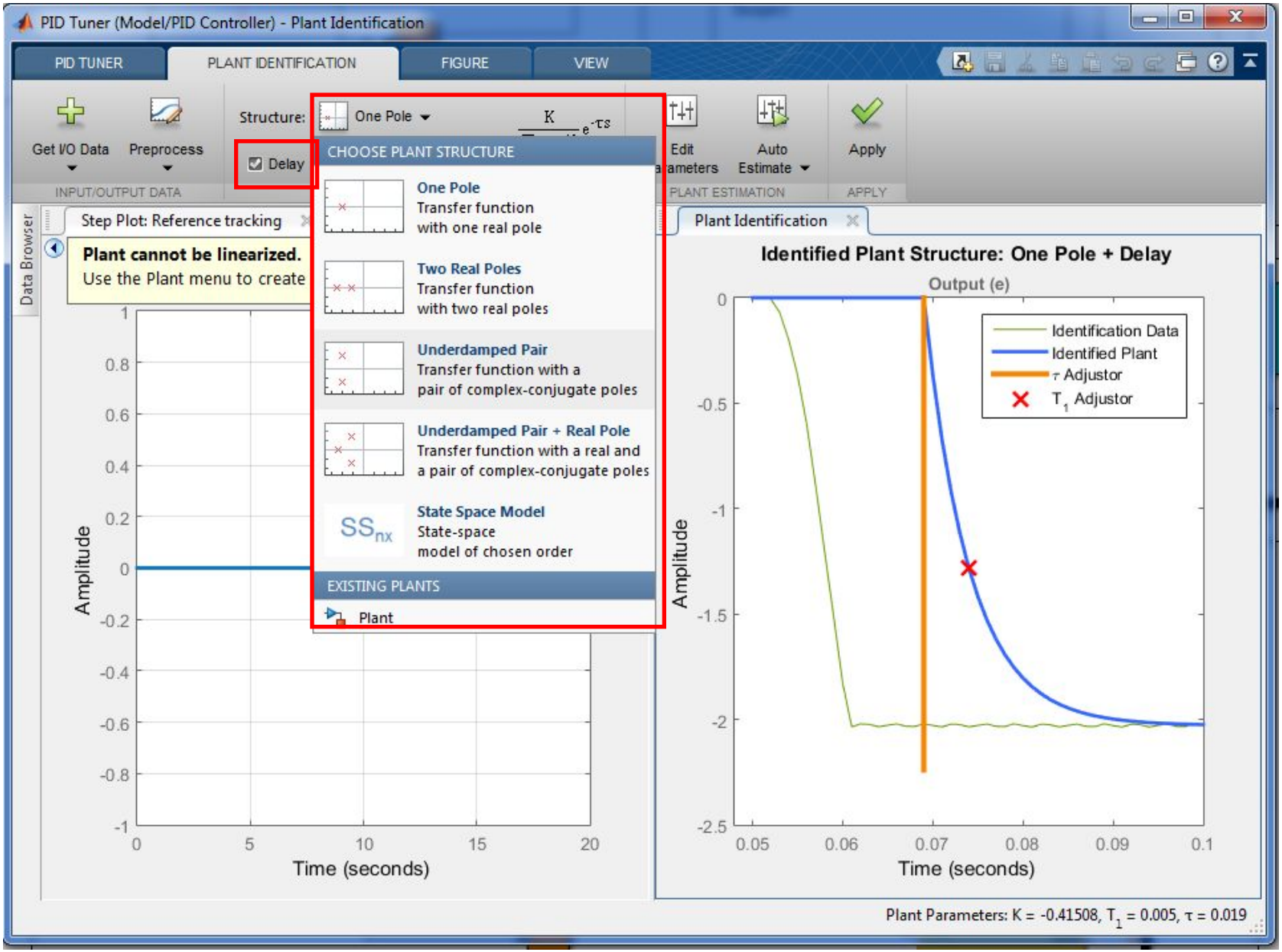
PID Tuner (Model/PID Controller) - Plant Identification
PID TUNER
PLANT IDENTIFICATION
FIGURE
VIEW
Get I/O Data
Preprocess
INPUT/OUTPUT DATA
Structure:
One Pole
Delay
CHOOSE PLANT STRUCTURE
One Pole
Transfer function with one real pole
Two Real Poles
Transfer function with two real poles
Underdamped Pair
Transfer function with a pair of complex-conjugate poles
Underdamped Pair + Real Pole
Transfer function with a real and a pair of complex-conjugate poles
State Space Model
State-space model of chosen order
EXISTING PLANTS
Plant
Edit
Auto Estimate
PLANT ESTIMATION
Apply
APPLY
Data Browser
Step Plot: Reference tracking
Plant cannot be linearized.
Use the Plant menu to create
Amplitude
Time (seconds)
Plant Identification
Identified Plant Structure: One Pole + Delay
Output (e)
Identification Data
Identified Plant
τ Adjustor
T1 Adjustor
Amplitude
Time (seconds)
Plant Parameters: K = -0.41508, T1 = 0.005, τ = 0.019

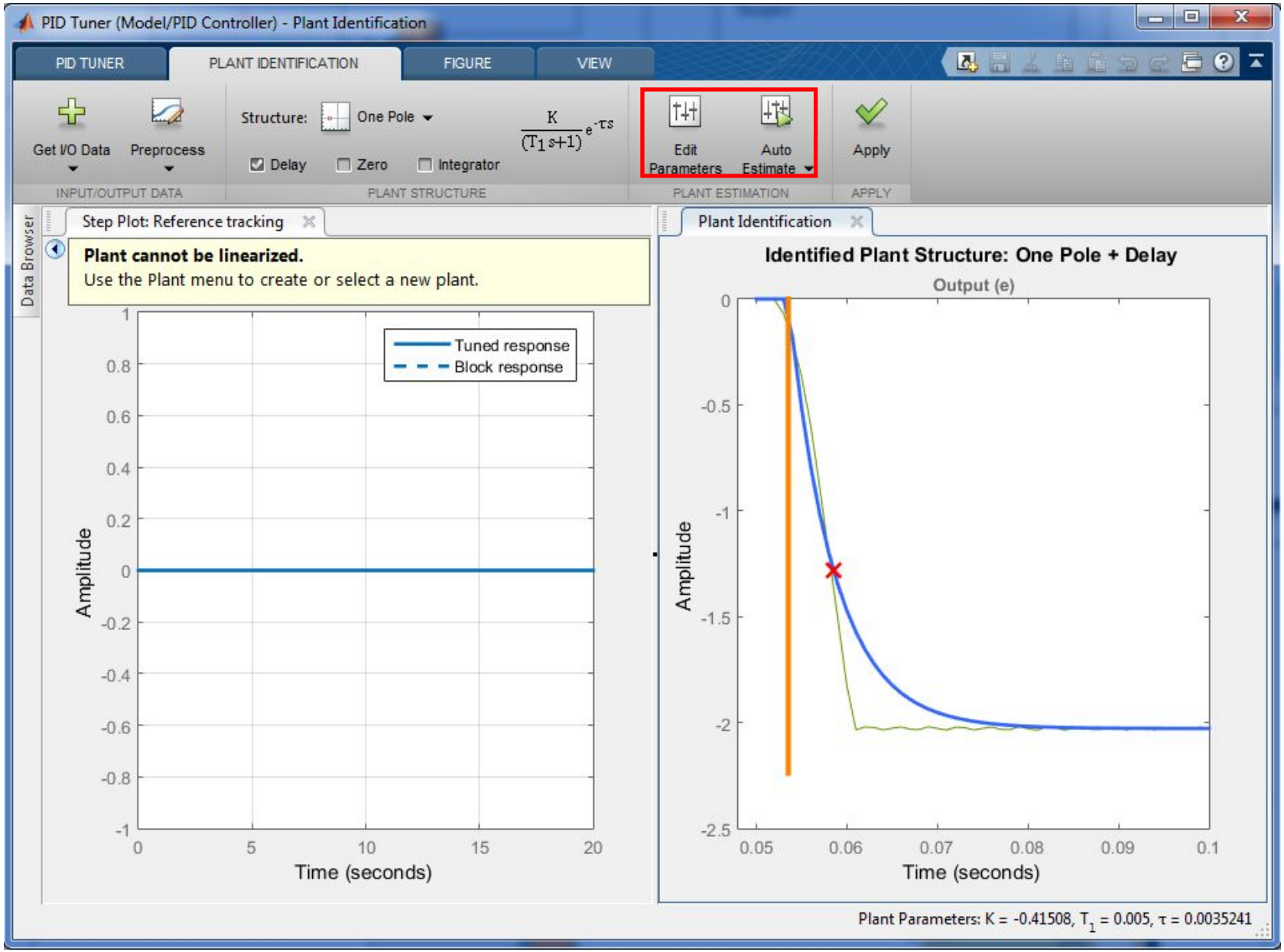
PID Tuner (Model/PID Controller) - Plant Identification
PID TUNER
PLANT IDENTIFICATION
FIGURE
VIEW
Get I/O Data
Preprocess
INPUT/OUTPUT DATA
Structure:
One Pole
Delay
Zero
Integrator
PLANT STRUCTURE
Edit Parameters
Auto Estimate
PLANT ESTIMATION
Apply
APPLY
Data Browser
Step Plot: Reference tracking
Plant cannot be linearized.
Use the Plant menu to create or select a new plant.
Tuned response
Block response
Amplitude
Time (seconds)
Plant Identification
Identified Plant Structure: One Pole + Delay
Output (e)
Amplitude
Time (seconds)
Plant Parameters: K = -0.41508, T1 = 0.005, τ = 0.0035241

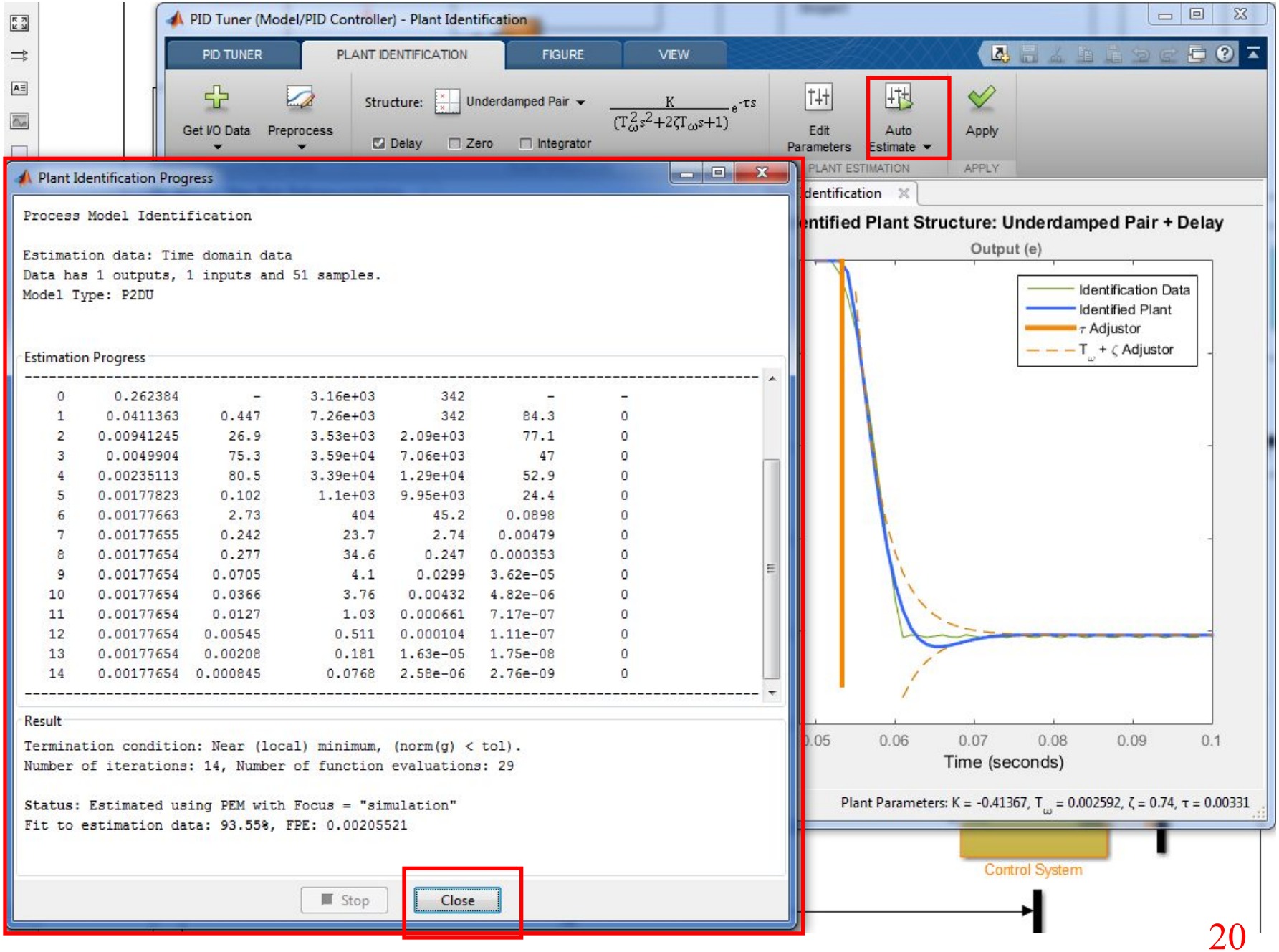
PID Tuner (Model/PID Controller) - Plant Identification
PID TUNER
PLANT IDENTIFICATION
FIGURE
VIEW
Get I/O Data
Preprocess
Structure:
Underdamped Pair
Delay
Zero
Integrator
Edit Parameters
Auto Estimate
Apply
PLANT ESTIMATION
APPLY
Plant Identification Progress
Process Model Identification
Estimation data: Time domain data
Data has 1 outputs, 1 inputs and 51 samples.
Model Type: P2DU
Estimation Progress
0 0.262384 - 3.16e+03 342 - -
1 0.0411363 0.447 7.26e+03 342 84.3 0
2 0.00941245 26.9 3.53e+03 2.09e+03 77.1 0
3 0.0049904 75.3 3.59e+04 7.06e+03 47 0
4 0.00235113 80.5 3.39e+04 1.29e+04 52.9 0
5 0.00177823 0.102 1.1e+03 9.95e+03 24.4 0
6 0.00177663 2.73 404 45.2 0.0898 0
7 0.00177655 0.242 23.7 2.74 0.00479 0
8 0.00177654 0.277 34.6 0.247 0.000353 0
9 0.00177654 0.0705 4.1 0.0299 3.62e-05 0
10 0.00177654 0.0366 3.76 0.00432 4.82e-06 0
11 0.00177654 0.0127 1.03 0.000661 7.17e-07 0
12 0.00177654 0.00545 0.511 0.000104 1.11e-07 0
13 0.00177654 0.00208 0.181 1.63e-05 1.75e-08 0
14 0.00177654 0.000845 0.0768 2.58e-06 2.76e-09 0
Result
Termination condition: Near (local) minimum, (norm(g) < tol).
Number of iterations: 14, Number of function evaluations: 29
Status: Estimated using PEM with Focus = "simulation"
Fit to estimation data: 93.558, FPE: 0.00205521
Stop
Close
Identified Plant Structure: Underdamped Pair + Delay
Output (e)
Identification Data
Identified Plant
τ Adjustor
Tω + ζ Adjustor
0.05
0.06
0.07
0.08
0.09
0.1
Time (seconds)
Plant Parameters: K = -0.41367, Tω = 0.002592, ζ = 0.74, τ = 0.00331
Control System

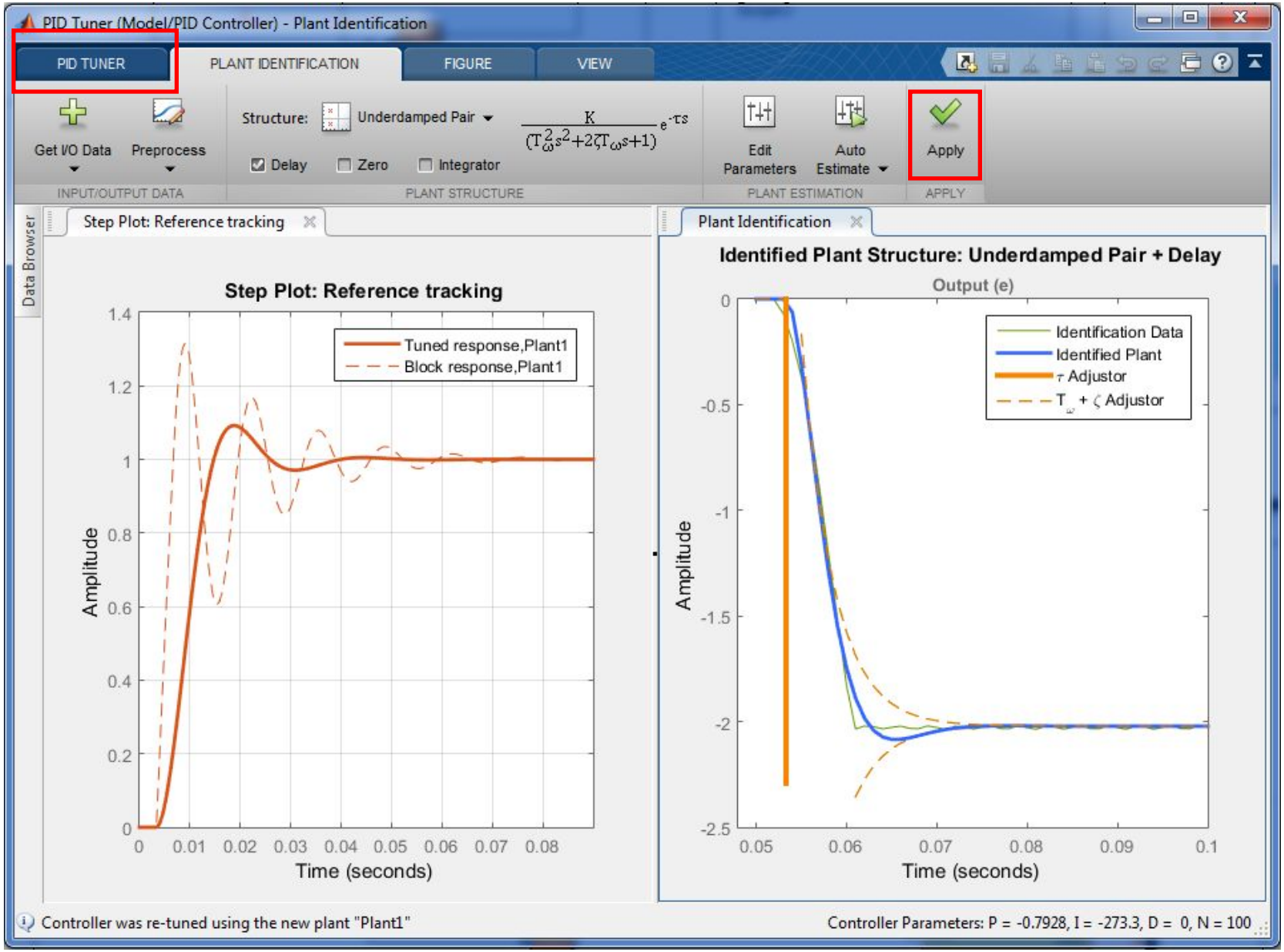
PID Tuner (Model/PID Controller) - Plant Identification
PID TUNER
PLANT IDENTIFICATION
FIGURE
VIEW
Get I/O Data
Preprocess
INPUT/OUTPUT DATA
Structure:
Underdamped Pair
Delay
Zero
Integrator
PLANT STRUCTURE
Edit Parameters
Auto Estimate
PLANT ESTIMATION
Apply
APPLY
Data Browser
Step Plot: Reference tracking
Step Plot: Reference tracking
Tuned response,Plant1
Block response,Plant1
Amplitude
Time (seconds)
Plant Identification
Identified Plant Structure: Underdamped Pair + Delay
Output (e)
Identification Data
Identified Plant
τ Adjustor
Amplitude
Time (seconds)
Controller was re-tuned using the new plant "Plant1"
Controller Parameters: P = -0.7928, I = -273.3, D = 0, N = 100

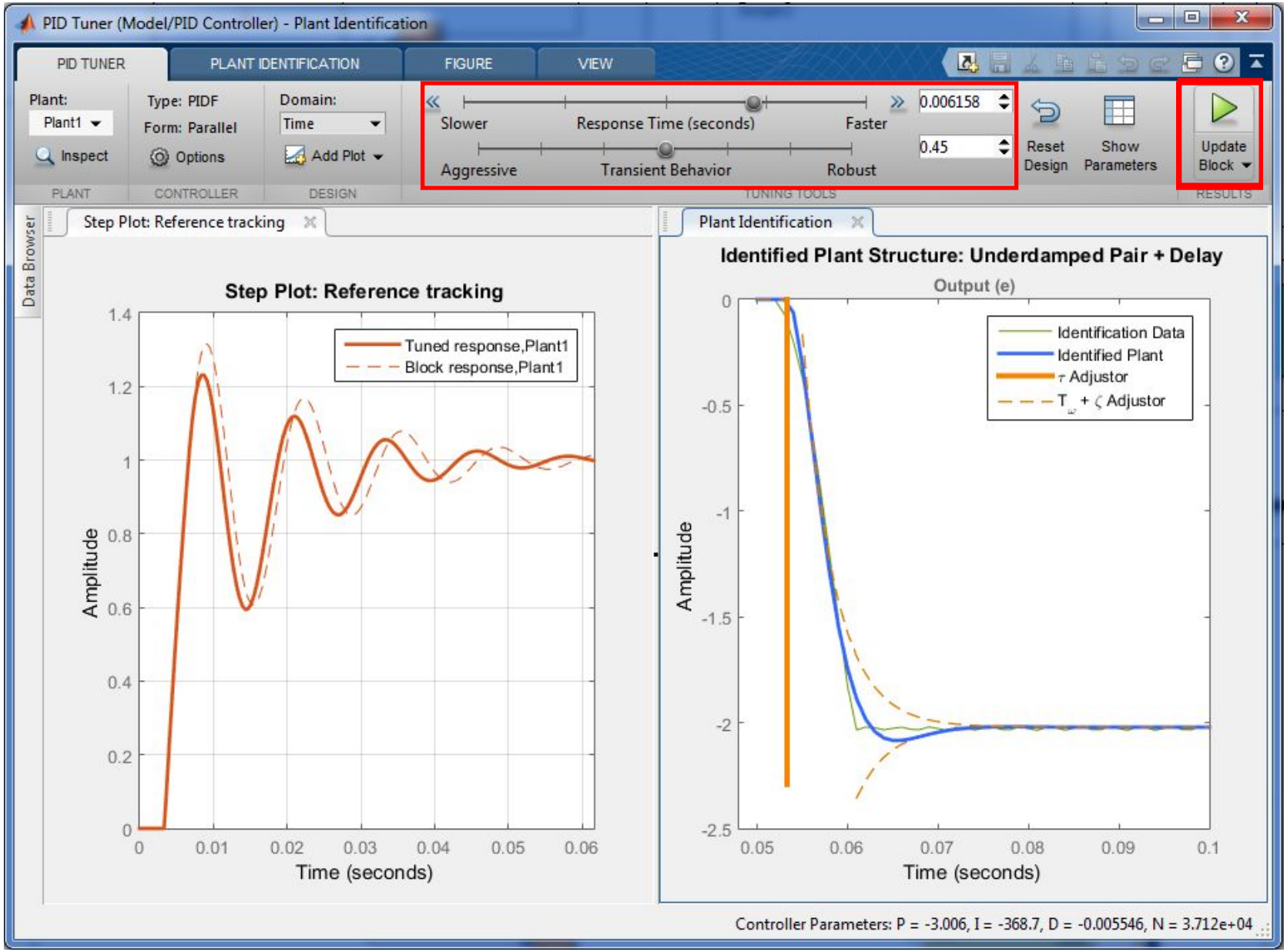
PID Tuner (Model/PID Controller) - Plant Identification
PID TUNER
PLANT IDENTIFICATION
FIGURE
VIEW
Plant:
Plant1
Inspect
PLANT
Type: PIDF
Form: Parallel
Options
CONTROLLER
Domain:
Time
Add Plot
DESIGN
Slower
Response Time (seconds)
Faster
0.006158
Aggressive
Transient Behavior
Robust
0.45
TUNING TOOLS
Reset Design
Show Parameters
Update Block
RESULTS
Data Browser
Step Plot: Reference tracking
Step Plot: Reference tracking
Tuned response,Plant1
Block response,Plant1
Amplitude
Time (seconds)
Plant Identification
Identified Plant Structure: Underdamped Pair + Delay
Output (e)
Identification Data
Identified Plant
τ Adjustor
Amplitude
Time (seconds)
Controller Parameters: P = -3.006, I = -368.7, D = -0.005546, N = 3.712e+04

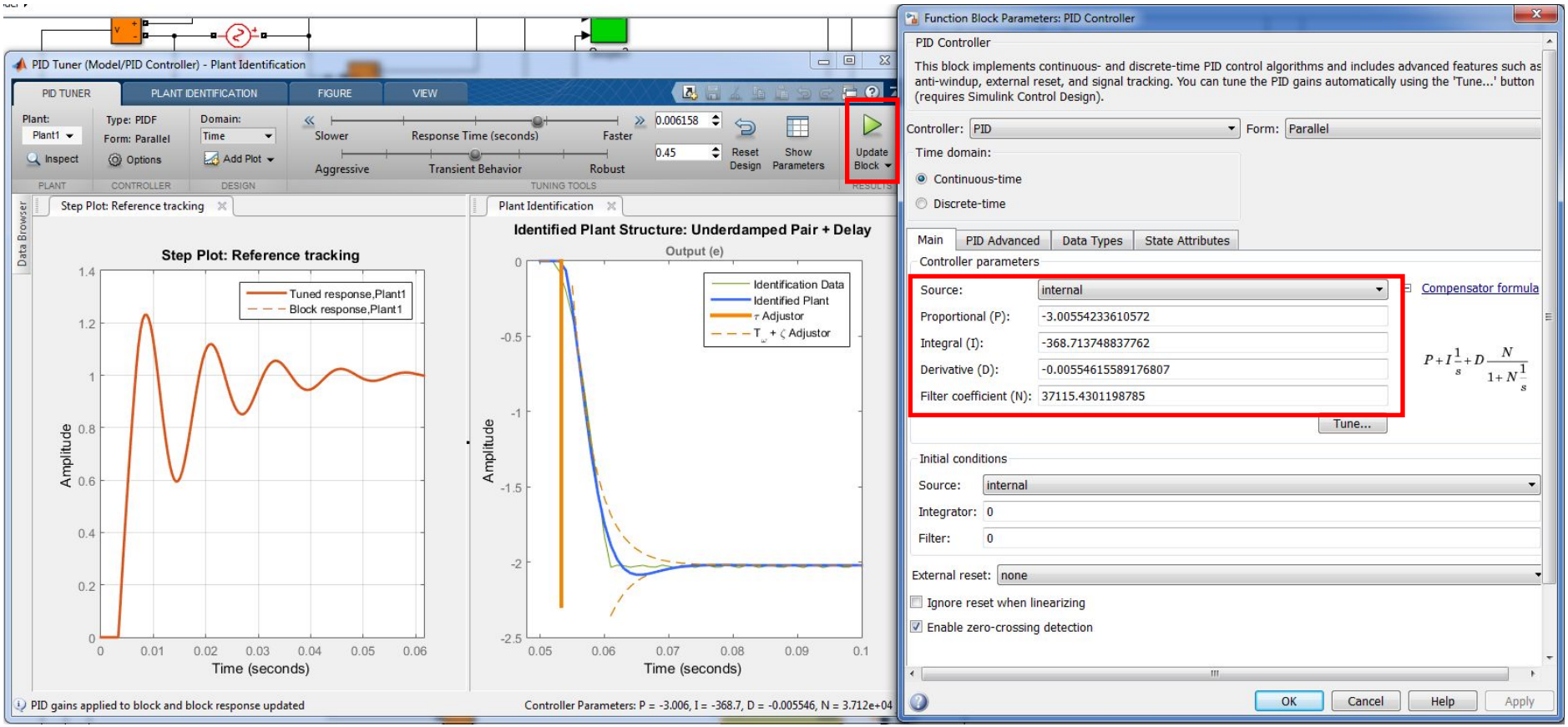
PID Tuner (Model/PID Controller) - Plant Identification
PID TUNER
PLANT IDENTIFICATION
FIGURE
VIEW
Plant:
Plant1
Inspect
Type: PIDF
Form: Parallel
Options
Domain:
Time
Add Plot
Slower
Response Time (seconds)
Faster
0.006158
Aggressive
Transient Behavior
Robust
0.45
Reset Design
Show Parameters
Update Block
PLANT
CONTROLLER
DESIGN
TUNING TOOLS
RESULTS
Data Browser
Step Plot: Reference tracking
Step Plot: Reference tracking
Tuned response,Plant1
Block response,Plant1
Amplitude
Time (seconds)
Plant Identification
Identified Plant Structure: Underdamped Pair + Delay
Output (e)
Identification Data
Identified Plant
τ Adjustor
Amplitude
Time (seconds)
PID gains applied to block and block response updated
Controller Parameters: P = -3.006, I = -368.7, D = -0.005546, N = 3.712e+04
Function Block Parameters: PID Controller
PID Controller
This block implements continuous- and discrete-time PID control algorithms and includes advanced features such as anti-windup, external reset, and signal tracking. You can tune the PID gains automatically using the 'Tune...' button (requires Simulink Control Design).
Controller: PID
Form: Parallel
Time domain:
Continuous-time
Discrete-time
Main
PID Advanced
Data Types
State Attributes
Controller parameters
Source: internal
Compensator formula
Proportional (P): -3.00554233610572
Integral (I): -368.713748837762
Derivative (D): -0.00554615589176807
Filter coefficient (N): 37115.4301198785
Tune...
Initial conditions
Source: internal
Integrator: 0
Filter: 0
External reset: none
Ignore reset when linearizing
Enable zero-crossing detection
OK
Cancel
Help
Apply

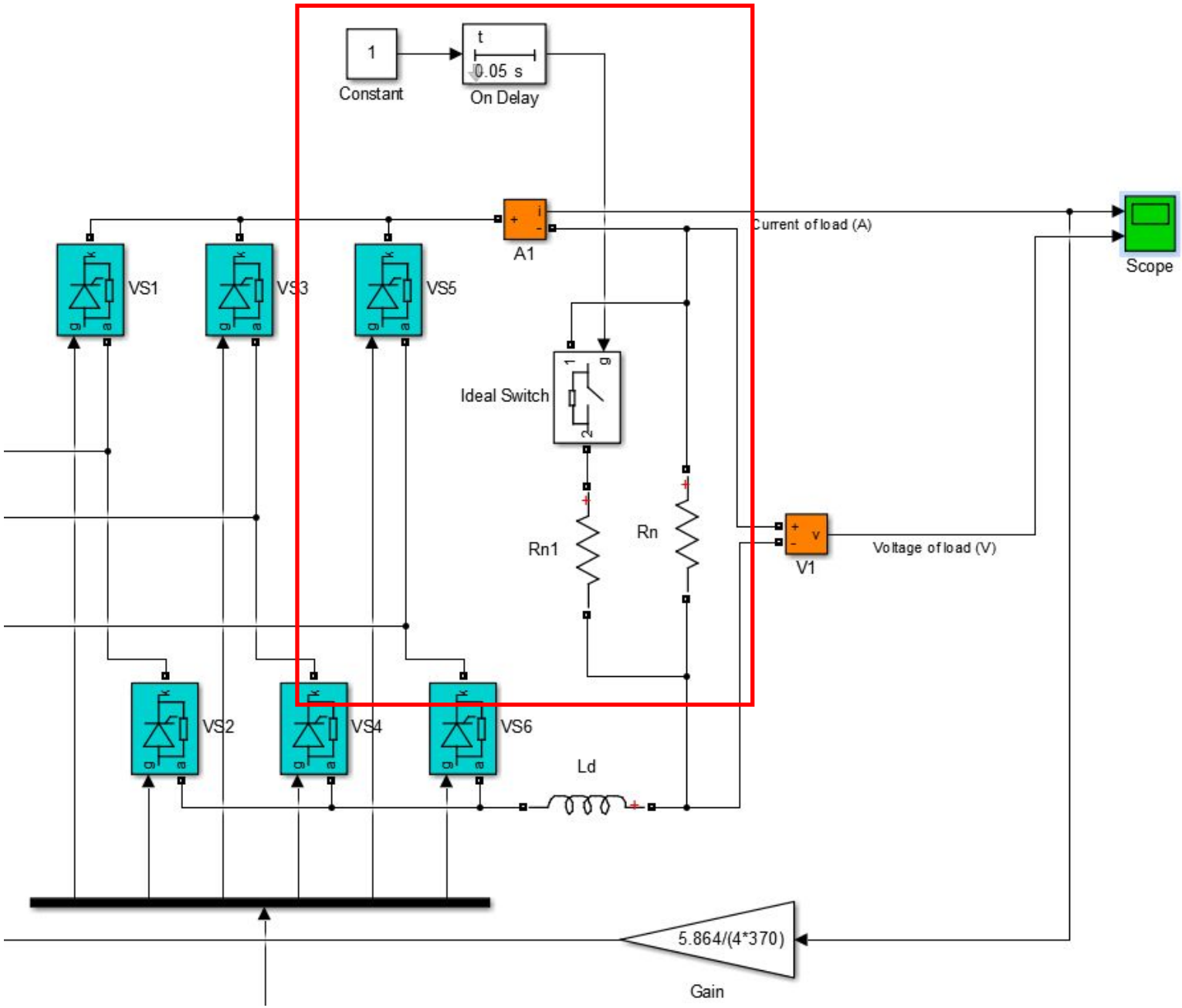
1
Constant
t
0.05 s
On Delay
A1
Current of load (A)
Scope
VS1
VS3
VS5
Ideal Switch
Rn1
Rn
V1
Voltage of load (V)
VS2
VS4
VS6
Ld
5.864/(4*370)
Gain

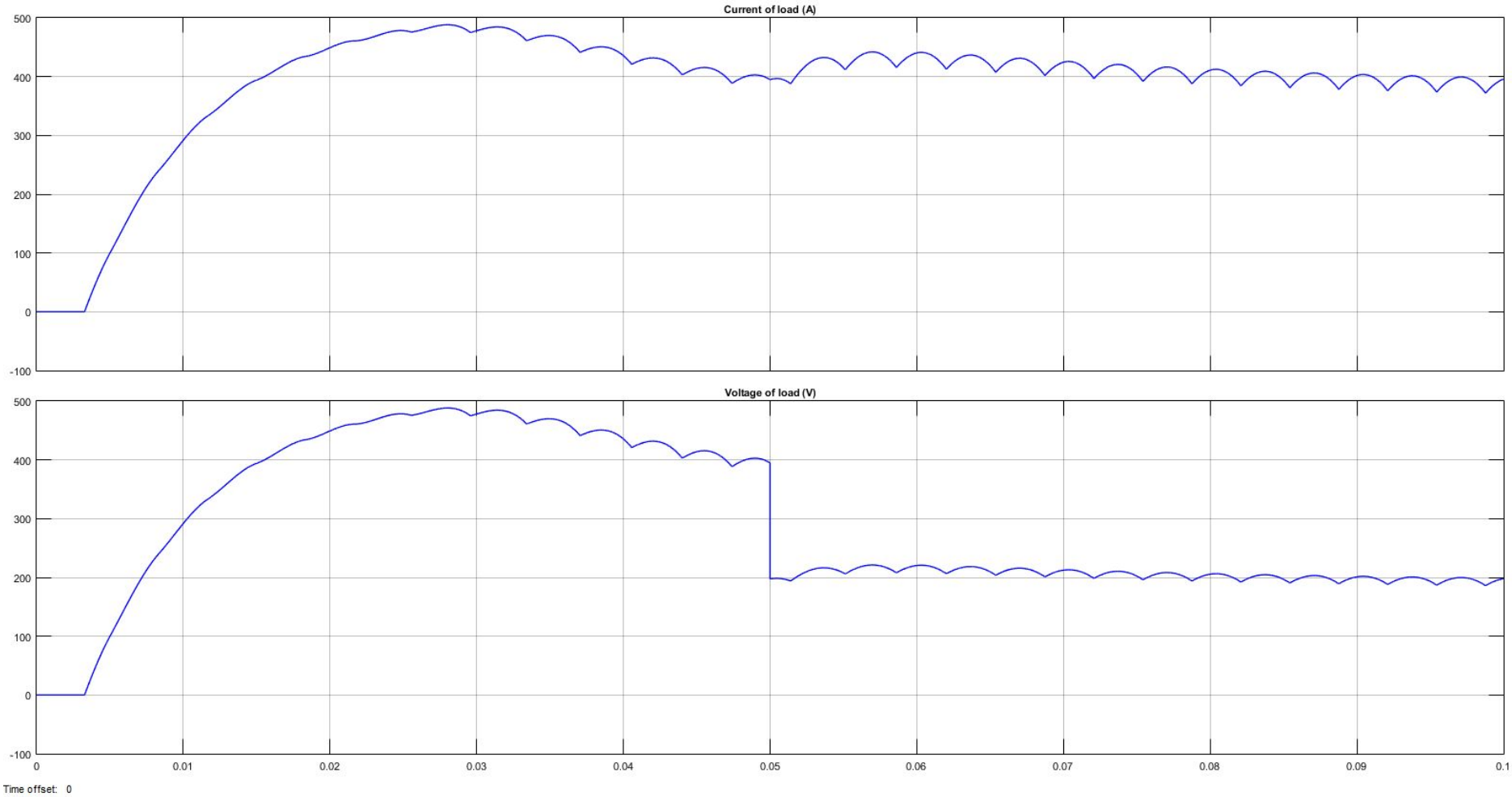
Current of load (A)
500
400
300
200
100
0
-100
Voltage of load (V)
500
400
300
200
100
0
-100
0
0.01
0.02
0.03
0.04
0.05
0.06
0.07
0.08
0.09
0.1
Time offset: 0