МННИСТЕРСТВО ОЕРАЗОВАННН Н НАуКН РОССНИСКОН ОЕ,^ЕРА^НН

ОНННАfl ОЕ^ЕРА^ВНОrО rОСу^АРСТВЕННОrО ЕW^ЕТНОrО ОЕРАЗОВАТЕНВНОrО у^РЕ^ЕННfl BWCmЕrО ОЕРАЗОВАННН «НА^НОНАflbНbIН НССНЕ^ОВАТЕnbСКНН уННВЕРСНТЕТ «М^Н» В r. СМОНЕНСКЕ

Ка^egpa «ТехНо.noruqecКux МamuН u oбopygoBaHun»

nОНСННТЕ^ВНАН ЗАnНСКА К КурсоВОН paOoТе no gucgunauНе «npuКnagHan МехаНuКа» На ТеМу: «РаОТеТМ На npo^HocTb МехаНu^ecКux КоНсТруКgufi»

НanpaBaeHue nogroToBKu: 13.03.02. ^^eКТро^Нер^еТНКа u aneКТроТехННКа npo^uab nogroTOBKu: РоРоТОТехНUКа В aneКТроМехаНugecКux cucТеМах

rpynna PT-20 АВТОР paOoTM **ATaKumueB ^.A.**

(nognucb)

PyKoBoguTeab paOoTM **ЕopucoB A.B.**

(nognucb)

PaOoTa gony^eHa K 3a^uTe 27.12.21 **ЕopucoB A.B.**

(gaTa) (nognucb)

PaOoTa 3a^u^eHa 28.12.21 **OgeHKa хopomo.**

(gaTa)

^aeHM KOMUCCUU **КоН^uНа .Н.В.**

(nognucb)

ЕopucoB A.B.

(nognucb)

CMoaeHcK
2021

OHHHAfl OE^EPAflbHOrO rOCy^APCTBEHHOrO BW^ETHOrO OBPA3OBATE^bHOrO y^PE^EHHfl BWCmErO OBPA3OBAHHH «HA^HOHAflbHBIH HCCHE^OBATEnbCKHH yHHBEPCHTET «M^H»
B r. CMOHEHCKE

Ka^egpa «TexHoaoruaecKue MamuHM u o6opygoBaHue»

HanpaBaeHue nogroToBKu 13.03.02 «^aeKTpo^Hep^eTUKa u aneKTpoTexHHKa»

3A^AHHE

Na KypcoByro paOoTy cTygeHTa ATaKumueBa ^.A. (rpynna PT-20)

TeMa: PacaeTM Na npoaHocTL MexaHuaecKux KoHcTpyKgufi Cogep^aHue pacaerao-noacHuTeaLHofi

3anucKu:

1. 3agaaa N1: nocTpouTL ^^ropM npogoaLHtix cua, Hanpa^eHufi u nepeMe^eHufi BBegeHue.
2. 3agaaa N2: nocTpouTL ^^Mpy KacaTeaLHtix Hanpa^eHufi.
3. 3agaaa N3: nocTpouTL ^^ropy nonepeaHtix cua u u3ru6aro^ux MOMeHTOB.
4. 3agaaa N4: nogoOpaTL nonepeaHoe ceaeHue 6aaKu.
5. 3agaaa N5: nog6op guaMeTpa Baaa npu u3ru6e c KpyaeHueM.
6. 3aKaroaeHue.
7. nepeaeHL rpa^uaecKoro MaTepuaaa:

1. ^^MpM K 3agaae N1
2. ^^MpM K 3agaae N2
3. ^^MpM K 3agaae N3
4. ^^MpM K 3agaae N4
5. ^^MpM K 3agaae N5 ^aTa

Btigaau 3agaHua: 8.09.2021

PyKOBOflHTeHb -—- /<T) - EopucoB A.B.

3agaHue npuHaaa K CTygeH

BtiHoaHeHuro: ATaKumueB ^.A.

^aTa 3a^uTM KypcoBofi paOoTM 28.12.2021

T

CMoaeHcK
2021

AHHOTa^H

B KypcoBOH pa6oTe paccMaTpHBaMTcn MexaHH^ecKHe KOHCTpyKgHH, gnn KOTOPMX BMnoaHHMTCH npo^HOcratie paOTeTM npu cnegyro^Hx Bugax ge^opMagHH: pacTH^eHHH (c^aTHH), Kpy^eHHH, H3rH6e, H3ra6e c Kpy^eHHeM.

Pac^eTHO-noHCHHTenLHaH 3anucKa KypcoBOH pa6oTM COCTOHT H3 28 CTpaHHg, 5 npHno^eHHH, BKnM^aM^Hx pucyHKH K 3aga^aM, 7 nHTepaTypHMx HCTO^HHKOB.

Knro^eBLie cnoBa: 6anKa, ^^Mpa, pacra^eHHe, Kpy^eHHe, H3rH6, npo^HOcrt.

Annotation

The coursework discusses mechanical structures for which toughness calculations are performed assuming that the following types of deformation occur: tension (compression), torsion, bending, bending and torsion.

The explanatory note on the calculations of this coursework comprises 28 pages, 5 applications, which include drawings for the tasks, and 7 literary sources.

Keywords: beam, diagram, tension, torsion, bending, strength.

o»DHoI/OIAI3 J a «|/|GIAI » AI/1H » A09JO i/em/MO			mitixAd-LDHOx XMXDdhMHeXdW qiDOHhOdU > . 6H NldhDBd			gv aoDMdog	■tfdaaiA	
							■d±HO>| 'H	
							■EHahad	
	V					■g'V aoDMc|p^.	■daaodu	
ao±DMi/	J-DML /	■±Ml/ (			a	aanrTiMXB±v	■gedeed	
				e-Letf	DMUffOU	■wAxotf oj\jXDMl/	we i/|	

l/MU ZO '£0 '£! 'd>1 '81

£Z .....KHH9M<0I/'Hdn

ZZ .....iadAxedaimf HtMaAeai/'oiiDH MODHU^

\Z .....9HH9h(HI/'5n?£

8T .....8⁵N ehei/ee

PI .....***p°bl*** eMi/ee

IT .....8⁵N ehei/ee

8 .....^ehetfee

9 .....T⁵NBhBtfe£

c; .....9HH9b'9ag

:9HHPM<d9'D

'03

BBegeHue

^aHHaa pacaerao-rpa^uaecKaa, KypcoBaa paSoTa aBaaeTca uroroM caMOCTOHTeaLHoro u3yaeHua yaeSHwx MaTepuaaoB, noayaeHHwx npu KoHTaKTHofi pa6oTe c npenogaBaTeaeM, u pemeHua 3agaa no gucgunauHe «npuKaagHaa MexaHHKa» Ha TeMy «PacaeT Ha npoaHocTL MexaHuaecKux KoHcTpyKgufi».

^atro BtmoaHeHua paSoTw aBaaeTca ocBoeHue MeTogoB pacaeTa Ha npoaHocTL KOHCTpyKgHH npu pa3HMx cayaaax ge^opMaguu: pacTa^eHHu(c^aTHu), KpyaeHuu, H3rH6e, H3rH6e c KpyaeHueM. B xoge BtmoaHeHua pacaerao-rpa^uaecKofi pa6oTM, 6LMH BtinoaHeHti pacaeTti, gaa nocTpoeHua ^^Mp BHyTpeHHux cuaoBtix ^aKTopoB gaa npuBegeHHMx BMme BugoB ge^opMaguu. A TaK^e cgeaaHti aepTe^u, HeoSxoguMtie gaa pacaeToB, B KOTOPMX npegcraBaeHLi ^^ropM gaa Ka^goro Buga ge^opMaguu. Etiau onpegeaeHti npoaHocratie xapaKTepucTUKu KoHcTpyKgufi, nogoSpaHM onTUMaaLHtie ceaeHua u cgeaaH aHaau3 npoaHocTu KoHcTpyKgufi.

KaroaeBtie caoBa npu BtinoaHeHuu KypcoBofi paSoTti:

EaaKa - 6pyc, Haxoga^ufica nog geficTBueM H3ru6aro^ux ycuaufi, B aacraocra, nonepeaHtix cua, MoMeHToB u pacnpegeaeHHtix Harpy3oK.

^^ropa - ocoStifi Bug rpa^uKa, noKa3tiBaro^HH pacnpegeaeHue BeauauHti Harpy3Ku Ha o6teKT.

PacTa^eHue - Bug npogoaLHofi ge^opMaguu cTep^Ha uau Spyca, Bo3HUKaM^ufi B TOM cayaae, ecau Harpy3Ka K HeMy npuKaagtiBaeTca no ero npogoaLHofi ocu (paBHogeficTByro^aa cua, Bo3geficTByro^ux Ha Hero, HopMaaLHa nonepeaHoMy ceaeHHM cTep^Ha u npoxoguT aepe3 ero geHTp Macc).

KpyaeHue - oguH H3 BugoB ge^opMaguu Teaa. Bo3HHKaeT B TOM cayaae, ecau Harpy3Ka npuKaagtiBaeTca K Teay B Buge napti cua (MoMeHTa) B ero nonepeaHofi naocKocTu. npu ^TOM B nonepeaHwx ceaeHuax Teaa Bo3HHKaeT ToaLKo oguH BHyTpeHHufi cuaoBofi ^aKTop — KpyTa^ufi MoMeHT.

H3ru6 - TaKofi Bug ge^opMaguu, Korga nog geficTBueM BHemHux cua B nonepeaHwx ceaeHuax cTep^Ha(fipyca) Bo3HHKaeT u3ru6aM^ufi MoMeHT.

npoaHocTL - ^TO OTOCOSHOCTL KoHcTpyKguu Bwgep^uBaTL 3agaHHyro Harpy3Ky, He pa3pymaacL.

					18. KP. 13. 03. 02. nM.	aMC T
M3M	aMC	N°	nognM			5

3aga^a N1

^aHo:

a **_ 0;** ***6*** **_ 9;** ***e*** **_ 7**

E **_ 240**[5] ***Mna***

[6] = 160 ***Mna*** *= 1,6* • 10[8] ***na***

CxeMa 7;

P[i] **= 17** ***KH, P2 = 19 KH;***

A[i] **= 2,0** ***CM²*****, A**[2] **= 2,9** ***CM²*****, A**[3] **= 2,7** ***CM²; a***

_ 0,8 M, ***b*** **_ 0,7** M, ***c*** **_ 0,6** M.

PemeHHe

ṇyHKT 1: nocTpoeHue ^^MpM npogoaLHMx cua ***Nz.***

y^acTOK 1 AB: ***NAB*** **_ P**[1] **= 17** ***KH***

y^acTOK 2 BC: ***NBC*** **_ P**[1] **= 17** ***KH***

yqacTOK 3 ***CD: NCD*** **_ P**[1] **- P**[2] **= 17 KH - 19 KH = -2** ***KH***

yqacTOK 4 ***DE: NDE*** **_ P**[1] **- P**[2] **= 17 KH - 19 KH = -2** ***KH***

nyHKT 2: nocTpoeHue ^^ropM HopMaatHMx Hanpn^eHHH

y^acTOK 1 AB: 6 **6AB**

y^acTOK 2 ***BC: 6BC*** **_**

y^acTOK 3 ***CD: 6CD*** **_**

y^acTOK 4 ***DE: 6DE*** **_**

$N_A B$	_ 17^ 10^3	_ 8,5^10^7	na _	85 Mna	
^{A}AB	2,0^ 10^{-4}				
NBC	_ 17^10^3	_ 5,86^ 10^7	na _	= 58,6	Mna
^{A}BC	2,9 • 10^{-4}				
NCD	_ 2^10^3	_ -6,9 ^10^6	na =	_ -6,9	Mna
^{A}CD	2,9^ 10^{-4}				
N_{DE}	_ 2-10^3	_ -7,4-10^6	na =	_ -7,4	Mna
$_{DE}$	2,9				

nyHKT 3: nOcTpOeHue ^^MpM nepeMe^eHHH nOnepe^HMx ce^eHHH 6руса[A l]**i.**

^ [l]i

A l [1] E

A l_E = 0

y^acTOK 4 ***DE: A*** **l_D = Al$_E$ +** O', DE ^ [l]D E DE [l]DE ■ = 0 + -7,4 '0,6 / 2-10^5 – = -2,22^ 10 M

yqacTOK 3 CD: A l_C = Al$_D$ + Δ CD ±CD D E [l]C = -2,22^0^{-5} + -6,9 -5 0,35 / 2^10^5 = -3,4275M0^{-5} M

M3M	**^MC**	**N°**	**nognM**	**flaT**

18. KP. 13. 03. 02. nM. -R3-

^M CT 6

y^acroK 2 *BC: A*l_B=Al_C+ 0"BC 'BC ^ТА^г ,п-5 58,6 '0,35 – – » –-5 = -3,4275-10^J + = 6,8-10^J M
l_B **E** 2-1 0

y^acTOK 1 *AB: A***l_A=Al_B+** ^AB'1^^„ ,„-5 ,85 '0,8 – „ ,·–-5 = 6,8-10 + = 40,8-10^J M
E 2-10^3

BMBog: TaK KaK |6_{max}| **<** [6] ^85 **<** ¹⁶°**, TO CTep^eHL Btigep^HT npHao^eHHLie Harpy3KH.**

M3M	**^MCT**	**N° goKyM**	**nognMC**	**flaT**

18. KP. 13. 03. 02. nM. -R3-

^M CT 7

3agaaa N2

K CTaaLHOMy Baay npuao^eHM Tpu u3BecTHMx MOMeHTa: Ti, T2, T3. Mogyat cgBura G = 0,8 • 10^5 Mna

TpeOveTca:

1) **CgeaaTL qepTe^ Baaa no 3agaHHMM pa3MepaM B MacmTaOe;**
2) **CocTaBHTL gaa Ka^goro yaacTKa Baaa B ceaeHuu aHaauTuaecKue Btipa^eHua H3MeHeHHH KpyTHigux MOMeHTOB T, KacaTeatHtix Hanpn^eHHH T u yraoB 3aKpy^HBaHHH 9;**
3) **nocTpoHTL ^^MpM npogoatHtix ycuauH T, KacaTeatHtix Hanpa^eHufi T u yraoB 3aKpy^HBaHHH 9;**
4) **CgeaaTL BLiBog o npoaHocra cTep^HH npu [T]=50 Mna**

HcxogHLie gaHHMe

T_1, KH^M	T_2, KH^M	T_3, KH^M	a, MM	b, MM	c, MM	d_1, MM	d_2, MM	d_3, MM	[T], Mna	G, Mna
0,19	0,17	0,29	600	500	700	60	50	30	50	0,8 • 105

CxeMa no pucyHKy: 7 PemeHue:

1) CocTaBHM gaa Ka^goro yaacTKa Baaa aHaauraaecKue BLipa^eHua u3MeHeHua KpyTH^ux MoMeHToB T u nocTpouM ^^Mpy KpyTHigux MoMeHToB.

$M_z = T_3 = 0{,}29$ KH-*M;*

$M_{BC} = T_3 - T_2 = 0{,}29 - 0{,}17 = 0{,}12$ *KH-M;*

$M_{z''CD} = T_3 - T_2 = 0{,}12$ *KH-M;*

$M_{zDE} = T_3 - T_2 + T_1 = 0{,}29 - 0{,}17 + 0{,}19 = 0{,}31$ *KH-M* .

2) CocTaBUM gaa Ka^goro yaacTKa Baaa aHaauTuaecKue BLipa^eHua u3MeHeHUH KacaTeaLHMx Hanpa^eHUH T u nocTpouM ^^Mpy KacaTeaLHLix Hanpa^eHUH.

$M_T = W_{pi}$

rge T_i - KacaTeaLHoe Hanpa^eHue Ha yaacTKe 1;

M_{zi} - KpyTH^uH MoMeHT Ha yaacTKe 1;

W_{pi} - MoMeHT conpoTuBaeHua ceaeHua yaacTKa 1, KoTopoe onpegeaaeTca BMpa^eHueM:

$W_{pi} = \frac{\pi d^3}{32}$

-rge d guaMeTp ce ~~IOHHH aacTKa~~

M3 M.	aMC T	N° goKyM.	nogn MC	fla T	aMC T

18. KP. 13. 03. 02. nM.

-R3-

$$\frac{Z_{AB}}{W_{PAB}} = \frac{0{,}29\cdot 10^{3}}{0{,}2\cdot(3\cdot 10^{-2})} = 0{,}0537\cdot 10^{9}\ na = 53{,}7\ Mm;$$

$$\frac{Z_{BC}}{W_{PBC}} = \frac{0{,}12\cdot 10^{3}}{0{,}2\cdot(5\cdot 10^{-2})} = 0{,}0048\cdot 10^{9}\ na = 4{,}8\ Mna;$$

$$\frac{Z_{CD}}{W_{PCD}} = \frac{0{,}12\cdot 10^{3}}{0{,}2\cdot(6\cdot 10^{-2})} = 0{,}0028\cdot 10^{9}\ na = 2{,}8\ Mna;$$

$$\frac{Z_{DE}}{W_{PDE}} = \frac{0{,}31\cdot 10^{3}}{0{,}2\cdot(6\cdot 10^{-2})} = 0{,}0072\cdot 10^{9}\ na = 7{,}2\ Mna.$$

3) CocTaBHM gaH Ka^goro yaacTKa Baaa aHaauTuaecKue Btipa^eHua yraoB 3aKpy^HBaHHH ^ u nocTpouM ^^ropy yraoB 3aKpyauBaHHH. yroa 3aKpy^HBaHHH onpegeaaeTCH no ^opMyae:

$$\theta = \frac{M_z \cdot l}{G \cdot J_p},$$

rge li - gauHa yaacTKa i, M;

G - MogyaL cgBura, Mna;

Jpi - MoMeHT HHepguu yaacTKa i, KoTopaH onpegeaaeTCH no ^opMyae:

$$J_{p_{DE}} = 0{,}1\ d^4 \text{ (T.K. ^TOT Kpafi 3aKpenaeH);}$$

$$\theta_{DE} = \frac{M_{z_{DE}} \cdot l_{DE}}{G_{DE} \cdot J_{p_{DE}}} = \frac{0{,}31\cdot 10^{3}\cdot 0{,}18}{0{,}8\cdot 10^{11}\cdot 0{,}1\cdot(6\cdot 10^{-2})^{4}} = 0{,}54\cdot 10^{-3}\ pad;$$

$$\theta_C = \theta_D + \theta_{DC} = 0{,}54\cdot 10^{-3} + \frac{M_{z_{DC}} \cdot l_{DC}}{G \cdot J_{p_{DC}}} = 0{,}54\cdot 10^{-3} + \frac{0{,}12\cdot 10^{3}\cdot 0{,}42}{0{,}8\cdot 10^{11}\cdot 0{,}1\cdot(6\cdot 10^{-2})^{4}} = 1{,}03\cdot 10^{-3}\ pad;$$

$$\theta_B = \theta_C + \theta_{CB} = 1{,}03\cdot 10^{-3} + \frac{M_{z_{CB}} \cdot l_{CB}}{G \cdot J_{p_{CB}}} = 1{,}03\cdot 10^{-3} + \frac{0{,}12\cdot 10^{3}\cdot 0{,}5}{0{,}8\cdot 10^{11}\cdot 0{,}1\cdot(5\cdot 10^{-2})^{4}} = 2{,}23\cdot 10^{-3}\ pad;$$

$$\theta_A = \theta_B + \theta_{BA} = 2{,}23\cdot 10^{-3} + \frac{M_{z_{BA}} \cdot l_{BA}}{G \cdot J_{p_{BA}}} = 2{,}23\cdot 10^{-3} + \frac{0{,}29\cdot 10^{3}\cdot 0{,}7}{0{,}8\cdot 10^{11}\cdot 0{,}1\cdot(3\cdot 10^{-2})^{4}} = 33{,}53\cdot 10^{-3}\ pad;$$

4) H3 ^^ropM KacaTeaLHoro Hanpa^eHHH MaKCHMaaLHoe Hanpa^eHue paBHo:

$$\tau_{max} = \tau_{AB} = \frac{53}{7} = 7\ Mn\cdot m;$$

npoBepuM npo^HocTL crep^HH npu gonycKaeMoM HanpaweHHu $\tau_{max} \le [\tau] = 50\ Mna$

M3M.	a^cT	N° goKyM.	nognM C	flaT

18. KP. 13. 03. 02. nM. **a^c T9**

m

CnegoBaTenLHO, ycnoBue npo^HOcra He BLinonHaeTcn (cTep^eHL paOoTaeT B ycnoBHH neperpy3KH).

$$n = \frac{I^T_{max}}{I^T_1} \cdot 100\% = \frac{50-53,7}{50} = 7,4\%$$

M3M	^MC	N°	nognM	flaT

18. KP. 13. 03. 02. nM. -R3-

^M
CT
10

3aga^a N3

nocTpoeHue ^^Mp BHyTpeHHux ycuaufi B cTara^ecKu onpegeauMwx 6aaKax.

Tpe6veTca:

1) HanucaTL Bwpa^eHun nonepe^Hofi cuaw ^{Q}y u roruSaro^ero MOMeHTa ^{M} gan Hanuca

Ka^goro y^acTKa B o6^eM Buge;

2) nocTpouTL ^^MpM nonepe^Hofi cuaw ^{Q}y u u3ru6aro^ero MOMeHTa ^{M}x;

P, KH	M, KH^M	a, M	b, M	C, M	d, M	KH ^ M
10	19	1,0	2,9	2,7	1,0	7

CxeMa no pucyHKy: 7

PemeHue:

1) OnpegeauM peaKguu onop. ^an onpegeaeHun peaKgufi cocTaBaneM ypaBHeHun cyMMw MoMeHToB Bcex cua oraocuTeatHo To^eK A u B.

$$\sum_{i=1} M_i = 0: P\,a + R_B i(b + c) + m - q - (c+d) \qquad b + \frac{c+d}{2} = 0;$$

$$R_B = -\frac{P\,a - m + q - (c+d)\cdot(b + \frac{c+d}{2})}{b+c}$$

$$-10-1,0-19 + 7-(2,7 + 1,0)\cdot(2,9 + \frac{2,7+10}{2,9+2,7}) = 16,79\ KH;$$

$$R_A = \frac{P-(a+b+c)+m+q-(c+d)\ \frac{c+d}{2}\ d}{b+c}$$

$$10-(1,0+2,9+2,7) + 19 + 7-(2,7 + 1,0)\cdot\frac{2,7+1,0}{2,9+2,7} = 19,11\ KH.$$

3HaK naroc y peaKgufi RA u RB noKa3MBaeT, ^TO HanpaBaeHue peaKgufi 6wao BwSpaHo BepHo.

npoBepKa no ycaoBuro paBHoBecuu:

$$\sum_{i=1}^{n} y = -P_A + R_B - q - (c+d) = 0;$$

-10+19,11 + 16,79-7-2,7 + 1,0)=0 .

0=0.

2) OnpegeauM nonepe^Htie cuaw Qy u nocTpouM ^^Mpy nonepe^Htix cua.

nepBmfi ygacTQK:

M3M	^MCT	N° goKyM	nognMC	gaT

18. KP. 13. 03. 02. nM. ne

^M CT 11

$0<z_1<a$ = 1,0 *м* Q_{yt}=-P=-10 *КН;*

<u>ВТороН ygacTQK:</u>

$0<z_2<b$=2,9 *М* Q_{y2}=-*P*+R_A=-*10*+19,11=9,11 *КН;*

<u>TpeTuH ygacTQK:</u>

$0<z_3<d$ = 1,0 *М* Q_{y3}=q-z_3;

при* z_3= 0: Q_{y3}=0 *КН;

при* z_3= *d*=1,0 *М*: Q_{y3}=q-z_3=7-1,0 = 7 *КН.

<u>^eTBepTfcrn ygacTQK:</u>

$0<z_4<c$ = 2,7 *М* Q_{y4} = -R_b+ q-(*d* + z_4);

при* z_4=0: Q_{y4}=-R_b+*q*-*d*=-16,79 + 7-1,0=-9,79 *КН;

при* z_4=*c* = 2,7 *М*: Q_{y4}=-R_B+q-(*d*+z_4) = -16,79 + 7-(1,0+2,7)=9,11 *КН.

3) Onpege^HM H3ru6aM^ue MOMeHTM Mx u nocTpouM ^^Mpy H3ru6aM^ux

MOMeHTOB. <u>nepBHH ygacTPK:</u>

$0<z_x<a$ = 1,0 *М* M_{x1} = -*P*-z_1;

при* z_1=0: M_{x1}=0 *КН-М;

при* z_1= 1,0: M_{x1}= -10-1,0 = -10 *КН-М;

<u>BTopofi ygacTPK:</u>

$0<z_2<b$ = 2,9 *М* M_{x2} = -P-(*a* + z_2) + R_A z_2; *при* z_2= 0: M_{x2}=-P-a=-10 *КН-М;*

при* z_2= b=2,9 *М* : M_{x2}=-P-(*a*+z_2)+R_A-z_2=-10-(1,0+2,9) +19,11-2,9= 616,42 *КН-М;

<u>TpeT</u>

<u>HH ygacTPK:</u>

$0<z_3<d$ = 1,0 *М* M_{x3} = m-*q*-*z* *при* *z*

z_3= 0: M_{x3} = 19 *КН-М;*

при* z_3= *d* = 1,0 *М* : M_{x3} = m-q-z_3-$\frac{z_n}{}$ = 19-7-1,0-$\frac{1}{02}$ =15,5 *КН-М;

<u>^eTBepTHH ygacTPK:</u>

$0<z_4<c$ = 2,7 *М* M_{x4} = m + R_B-z_4-q-(z_4 + *d*)• *при* $\frac{z_4+d}{2}$

z_4=0: M_{x4}=m-*q*-*d*~ = 15,5 *КН-М;*

2

***при* z_4 = *c* = 2,7 *М* : M_{x4}=m + R_B-z_4-*q*-- =19 + 16,79-2,7¬ $\frac{(z_4+d)}{2}$**

7 $\frac{(2,7+1,0)^2}{}$,6 42 „

-7- =16,42 *КН-М;*

2				
M3M	^MCT	N° goKyM	nognMC	flaT

18. KP. 13. 03. 02. nM. ne

^MCT 12

^^ropa 6ygeT HB^HTLCH napaSoaoS BLinyKnocrtM BBepx c MaKCHMyMOM B TO^Ke,

rge Q_y 4 o . HafigeM ^Ty Tomy:

$$Q_y^{R} = \frac{1}{d} \cdot R_b + q \cdot (l_d + z_4) = 0 \quad z_4 = \frac{R_B \cdot q \cdot l_d - 16,79 \cdot 71,0}{q} = 1,398 \text{ м;}$$

z_1 398

nogcTaBHM 4_' B aHaaHTH^ecKoe ypaBHeHue gan H3rH6aro^ero MOMeHTa Ha qeTBepTOM y^acTKe:

$$M_{x\,max} = m + R_B \cdot l_1 + q \cdot \frac{l_1^2}{2} = 19 + 16,79 \cdot 1,398 + 7 \cdot \frac{1,398^2}{2} =$$

=22,34 *KH.M* .

I43 M	^MC T	N° goKyM	nognM C	flaT

18. KP. 13. 03. 02. nM. -R3-

^M GT 13

3aga^a N4

^nn 3agaHHofi 6anKu H3 3aga^H N 3

1. BtmepTHTL B MacmTa6e 3agaHHoe ce^eHue 6anKH c yKa3aHueM qucneHHtix 3Ha^eHHH pa3MepoB. Onpegenurt nono^eHue geHTpa TH^ecru ce^eHun u BtiqucnuTt MOMeHT HHep^H Ce^eHHH OTHOCHTentHO HeHTpantHOH

2. 3cnocTpouTL ^^MpM HopMantHtix Hanpn^eHHH, pacnpegeneHHtix no BticoTe ce^eHHH gnn ce^eHun c MaKcuMantHMM H3ru6aM^uM MOMeHTOM M_x, B3HTMM H3 3aga^u N 3.

3. Hcnont3yn ^^MpM H3ru6aro^ux MOMeHTOB M_x, nocrpoeHHtix B 3aga^e N 3, onpegenuTt H3 pac^eTa Ha npo^HocTt HOMep npo^unn gByTaBpoBofi (npu 3Ha^HTentHOH Hegorpy3Ke npuHHTt gnn 6anKH ce^eHue B Buge mBennepa) npoKaTHofi 6anKH. MaTepuan 6anKu - cTant CT.3, [a] = 160 Mna.

4. npu TOM ^e 3Ha^eHuu gonycKaeMoro Hanpa^eHun onpegenuTt nO ycnoBuro npo^Hocru pa3Mepm nonepe^Horo ce^eHun B $opMe:

a) Kpyra guaMeTpa d;

6) Kontga c OTHomeHueM guaMeTpoB $c_o = \frac{d}{h} = 0{,}6$

B) np^MoyrontHuKa c OTHomeHueM CTOPOH $k = \frac{b}{h} = 1'9$

5. CocraBurt Ta6nugy OTHomeHufi nno^agefi yKa3aHHtix ce^eHufi K nno^agu gByTaBpoBoro npo^unn.

[a], Mna	M_x max, kHM	B, MM	C, MM
160	22,34	22	26

HoMep ce^eHun:

7

1) OnpegenuM geHTp TH^ecra OTHocuTentHO HefiTpantHofi ocu Ox:

$$y_c = \frac{\sum_{i=1}^{n} A_i y_{ci}}{\sum_{i=1}^{n} A_i}$$

zde A, -nno^adb i- mozo ceueHun, MM ; y_c - paccmoRHue om ocu Ox do i-mozo yeumpa mnwecmu, MM .

$$y_c = \frac{A_1 y_{c_1} + A_2 y_{c_2} + A_3 y_{c_3}}{A_1 + A_2 + A_3}$$

zde A_1 = B-4*C*=22-4-26=2288 *MM²;*

A_2=3B2*C =* 3-22-2-26=3168 *MM²;*

$A_3 = \frac{n}{4}(1{,}5B)^2 = \frac{3{,}14}{4}(1{,}5\cdot 22)^2 = 855$ *MM²*

M3M	^MC	N°	nognM	flaT

18. KP. 13. 03. 02. nM. ne

^M CT 14

y_c = EC, = = =11 *MM;*
Jc_i 1 2 2 2 = B =22

y_c = EC_2 = ^ + B= 2 + 22 = 55 *MM;*
3 B 3-2 2

y_c = EC_3 = 3B=3-22 = 66 *MM;*

A iy c i + A2 6 y C2 - A 3 6 y C3 2288-11 + 3168-55-855-66
y_c=- = =31,1 *MM;*
Jc A1 + A2-A3 2288+3168-855

2) OnpegeauM MOMeHT HHepgHH ceaeHHa OTHOCHTeatHO OCH Ox:
2 2 2 Jx = Jx + A1 6 a1 + Jx + A2 6 a2 + Jx + A3 6 a3 ,

^^e a 1=CC1=yc-yc =31,1 -11=20,1 *MM;*

a2=CC2=yc -yc = 55-31,1 = 23,9 *MM;* a3 =

CC3=yc cyc =66-31,1=34,9 *MM;*

Jx = —1 b 6 h1 1 = 4 CB3 - = - - 4-26-22 3 =92283 *MM4* = 9,23 *CM4*,.
x1 12 12 12

, b 26 h 26-3B)3 2-26-(3-22)3 4 4
Jx2 = = "2 6 =1245816 *MM* =124,58 *CM;* 124r816 58
12 12 12

, nd4 n-(1,5B)4 3, 14-1,5-22)4 r8184 4 5 82 4
J„ = = = =58184 *MM* = 5,82 *CM ;*
x3 64 64 64

2 2 2 Jxc= Jxc + A1 6 a1 + Jxc + A2 6 a 2 Jxc - A3 6 a3 =

=9,23+22,88-2,01²+124,58 +
31,68-2,39²-5,82-8,55-3,49²=297,25 *CM4;*

3) HopMaatHtie Hanpa^eHHa npu H3rH6e no BMCOTe

ceaeHHa pacnpegeaeHM no aHHeHHOMy 3aKOHy *u* B aroSofi Tome ceaeHHa

onpegeaaroTca no ^opMyae:

„ Mz max
ai=—, ■■ y,'
xC

ede Mz-u3eu6aK>w,uu MOMeHm e ceueHuu,KH-M;

Mz max 22,34-10 8 6 0,0569
a1= -y D = -8 = 0,27 *MM;* 427,6 Mn
D= J, x 297,25 10-8 .
xC

Mz max 22,34-10 8 6 0,0569
a2= -y E = -8 = 0,23 *MM;* J/rrT
E J. x 297,25 10-8
xC

CrrOHM ^^ropy HopMaatHtix Hanpa^eHHH gaa onacHoro ceaeHHa: y_D = *CD* = 36,9 *MM;*

y_E =*CE* = 31,1 *MM*

M3Ma	aMC T	N°	nognM S	gaT

18. KP. 13. 03. 02. nM. n3

aMC T 15

4) OnpegeauM MOMeHT conporaBaeHua ceaeHua W_x **6aaKu:**

$M_{max} = -zmL < [\sigma]$,

W_x

$W_x = \frac{M_{max}}{[\sigma]} = \frac{z_{max}}{[\sigma]} = \frac{22,34 \cdot 10^3}{160 \cdot 10^6} = 139,6\ CM^3$

Bbi6epeM coraacHo rOCT 8239-89 gByTaBp ^18 : ***W= 143 CM³, A = 23,4 CM².***

Hanpa^eHue B ^TOM cayaae 6ygeT paBHo:

$\sigma = \frac{M}{W_x} = \frac{22,34 \cdot 10^9}{143 \cdot 10^{-6}} = 0,156 \cdot 22 \cdot 10^9\ na = 156,22\ MUa.$

Hegorpy3 в ^TOM cayaae 6ygeT paBeH:

$\frac{\sigma - [\sigma]}{[\sigma]} \cdot 100\% = \frac{160 - 156,22}{160} \cdot 100\% = 2,4\% < 20\%$

W= 152 CM³,A=23,4 CM².

ECHH nPUH^Tb 6aaKy B $opMe mBeaaepa N°

20: Hanpa^eHue B ^TOM cayaae 6ygeT paBHo:

$\sigma = \frac{M}{W_x} = \frac{22,34 \cdot 10^9}{152 \cdot 10^{-6}} = 0,14697 \cdot 10^9\ na = 146,97\ Mna.$

Hegorpy3 B ^TOM cayaae 6ygeT paBeH:

$\frac{[\sigma] - \sigma}{[\sigma]} \cdot 100\% = \frac{160 - 146,97}{160} \cdot 100\% = 8,1\% < 20\%$ ^ *y meejnep nedocpy3 dojbwe, [a]* **160**

м у gByTaBpa, ^o^TOMy 6epeM gByTaBp N°18.

ae

5) OnpegeauM nonepeaHoe ceaeHue 6aaKu B $opMe Kpyra:

$W_x = \frac{\pi d^3}{32} > \frac{z_{max}}{[\sigma]}$ $W_x = \frac{32 \cdot 22,34 \cdot 10^3}{3,14 \cdot 160 \cdot 10^6} = 112,5\ MM;$

$A_{KP} = \frac{\pi d^2}{4} = 99,35\ CM^2;$

OnpegeauM nonepeaHoe ceaeHue 6aaKH B $opMe Koabga:

$W_x = \frac{\pi d^3 \cdot (1 - c_0)}{32}$, *ede* $c_0 = \frac{d}{\sim d \sim} = 0,6$ *u* $(1 - cQ) = (1 - 0,6^4) = 0,87$, *m. e.*

$W_x = \frac{\pi d^3 \cdot 0,87}{32} > \frac{z_{max}}{[\sigma]}$ $W_x = \frac{32 \cdot 22,34 \cdot 10^3}{3,14 \cdot 160 \cdot 10^6 \cdot 0,87} = 117,8\ MM;$

$A_{KOJI} = \frac{\pi d^2 \cdot (1 - c_0^2)}{4} = \frac{\pi d^2 \cdot 0,87}{4} = \frac{0,87 \cdot 3,14 \cdot 11,78^2}{4} = 94,77\ CM;$

nogSepeM ceaeHue B $opMe npaMoyroabHUKa (h = 1,9/b):

M3M	aMCT	N° goKyM	nognMC	gaT

18. KP. 13. 03. 02. nM. -R3-

aMCT 16

$W_{xx} = \frac{bh^2}{6} = \frac{b\cdot(1{,}9b)^2}{6} = \frac{0{,}6\cdot b^3}{1{,}9} = \frac{0{,}6\cdot 322{,}34\cdot 10^3}{160\cdot 10^6\cdot 0{,}6} = 61{,}5$ *мм;*

$h = 1{,}9\cdot b = 1{,}9\cdot 61{,}5 = 116{,}8$ *мм;*

$A_{пр} = b\,h = 6{,}15\cdot 11{,}68 = 71{,}83$ *см²*

Состалвляем спецификацию стержней:

Марка	Форма стержня	$A_{s,i}$, см²	Справочные данные
1	#	99,35	4,24
2	0	94,77	4,05
3	1	71,83	3,07

М3М.	^МСТ	N° goKyM.	nognMC	flaT

3agaaa N5

CTaatHofi Baa Bpa^aeTca c nocToaHHofi aacTOTofi n u nepegaeT MO^HOCTL N.

TpeSyeTca:

1) **OnpegeauTL Harpy3KH, geficTByro^ue Ha Baa;**
2) **nocTpOHTL ^^MpM KpyTR^HX MOMeHTOB, ^^MpM H3rH6aM^HX MOMeHTOB B gByx naocKocrax (BepTuKaatHofi u roprooHTaatHofi);**
3) **nogoSpaTL guaMeTp Baaa, ucnoaL3yro TpeTLro Teopuro npoaHocTu, ecau u3BecTHO gonycKaeMoe Hanpa^eHue [a] = 170 Mna**

HcxogHLie gaHHLie

N, KBT	Teopua npoaHocTu	a, MM	b, MM	D1, MM	D2, MM	n, MUH	[a], Mna
17	TpeTLa	190	170	80	220	600	170

CxeMa no pucyHKy: N7 PemeHue:

1) OnpegeauM BeauauHy KpyTa^ero MoMeHTa:

$N \quad nn$

$T = M =— ;a =—;$

Kp **a 30**

30-N 301710³

$T=^{30-N}=^{3\circ}-^{17}-^{\wedge}=271$ ***H-M*=0, 271 *KH-M; nn* 3,14-600**

OnpegeauM BeauauHM oKpy^HMx u paguaatHtix cua Ha 3y6aaTtix Koaecax:

$F_t = _T_=2T.$

$= 0,5\ D = D'$

$2\ T\ 2\text{-}271$

$F_t = \quad = \quad =6775\ H=6,775\ KH;$

$1\ D_1 \quad 0,08$

$2\ T\ 2\text{-}271$

$F_t = \quad = \quad =2464\ H=2,464\ KH;$

$D_2 \quad 0,22$

$F_{r2} \quad =F\text{-}tga=F\text{-}0,364, \quad ede$

$Fa=2,i0,364=6,775\text{-}0,364=2,466\ KH;$

$F_{r1} \quad F_{t1}$

$F_{r2} =F_{t2}\ i0,364=2,464\text{-}0,364= 0,897\ KH;$

2) nocrpouM ^^ropM u3ru6aro^ux MoMeHToB B naocKocTax xOz u yOz. ^aa ^TO^o HaHgeM onopHtie peaKguu: a) PaccMoTpuM BepTuKaaLHyro naocKocTL:

$$\sum_{k=1}^{n} F_{y} = 0; \quad -R_{Ay} - R_{By} - F_{r2} + F_{t} = 0;$$

M3M	aMC T	N°	nognM C	gaT

18. KP. 13. 03. 02. nM. ne

aMC 18T

$\sum M_x = 0$; $-F_r \cdot 3a + F_t \cdot 6a - R_{By} \cdot 6(3a+b) = 0$;

$$R_{By} = -\frac{F_r \cdot 3a + F_t \cdot 6a}{3a+b} = \frac{-0{,}897\cdot 3\cdot 0{,}19 + 6{,}775\cdot 0{,}19}{3\cdot 0{,}19 + 0{,}17} = 1{,}049\ KH;$$

$R_{Ay} = -R_{By} - F_r + F_t = -1{,}049 - 0{,}897 + 6{,}775 = 4{,}829\ KH;$

npoBepKa:

$\sum M_x = 0$; $F_r \cdot 6b - F_t \cdot 6(2a+b) + R_{Ay} \cdot 6(3a+b) = 0$;

$0{,}897\cdot 0{,}17 - 6{,}775\cdot(2\cdot 0{,}19 + 0{,}17) + 4{,}829(3\cdot 0{,}19 + 0{,}17) = 0$; $-0{,}001 \ll 0$;

6) PaccMOTpuM ropH30HTa^LHyro nnocKOCTb:

$\sum F_x = 0$; $R_{AX} + R_{BX} - F_r - F_t = 0$;

$\sum M_y = 0$; $F_r \cdot 6a + F_t \cdot 6a - R_{Bx} \cdot 6(3a+b) = 0$;

$$R_{Bx} = \frac{F_r \cdot a + F_t \cdot 6a}{3a+b} = \frac{2{,}466\cdot 0{,}19 + 2{,}464\cdot 3\cdot 0{,}19}{3\cdot 0{,}19 + 0{,}17} = 2{,}53\ KH;$$

$R = -R_{BX} + F_r + F_t = -2{,}53 + 2{,}466 + 2{,}464 = 2{,}4\ KH;$

npoBepKa:

$\sum M_y = 0$; $-F_B \cdot 6(2a+b) - F_r \cdot 6b + R_x \cdot 6(3a+b) = 0$;

$-2{,}466 \cdot (2\cdot 0{,}19 + 0{,}17) - 2{,}464\cdot 0{,}17 + 2{,}4\cdot(3\cdot 0{,}19 + 0{,}17) = 0$;

$0{,}001 \approx 0$;

nocrpoHM ^^Mpy H3ra6aM^Hx MOMeHTOB B BepTHKa^bHofi nnocKQCTH: I ygacTQK:

$0 < z_1 < a = 190$ MM;

$M_{x_C} = -R_{Ay} \cdot z_1 > 0$

npu $z_1 = 0$ * $M_x = 0$;

npu $z_x = 190$ MM * $M_{AC} = -4{,}829\cdot 0{,}19 = -0{,}917$ KH-M;

II ygacTQK:

$0 < z_3 < b = 170$ MM;

$M_{DB} = -R_{By} \cdot z_{By}$ 3'

npu $z_3 = 0$ * $M_x = 0$;

npu $z_3 = 170$ MM * $M_x = -1{,}049\cdot 0{,}17 = -0{,}178$ KH-M;

M3M.	BMCT	N° goKyM.	nognMC	flaT

18. KP. 13. 03. 02. nM. ne

BMCT 19

nocrpoHM ^^ropy H3rH6aro^Hx MOMeHTOB B roprooHTanLHoH nnocKocTH:

I ygacTOK:

0<z_1<*a* = 190 *MM;*

$^{M}y_{AC}$= ^{R}Ax $^{LZ}1$;

z* = 0 ^ *M* = 0; npu ^{1} ^ *AC

z*. = 190 *MM* ^ *M* =2,4-0,19=0,456 *KH-M;

npu ^{1} ^ *AC*

II ygacTOK:

0<z_3<*b* = 170 *MM;*

$^{M}y_{DB}$ = ^{RB*L} z_3 :

^ z_3 = 0 ^ *M* = 0;

npu ^{3} z_3 = 170 *MM* ^ *M* =2,53-0,17= 0,43 *KH-M;*

npu

3) OnpegenHM gHaMeTp Bana HCxogH H3 ycnoBHH oOecneHeHHH npo^Hocra no

TpeTLefi TeopHH:

M_{3K8} = $\mu M^2_x + M^2_y + 0,75\ T^2$.

no TpeTLefi TeopHH, npo^Hocm:

M_{KD} = JM^2* + M2 + 0,75 T^2 =V(-0,917)^2+0,456^2+0,75-0,271^2 = 1,051 *KH-M;*

M^{A}_{3K8} = JM^2_A + M^2_A + 0,75 T^2 = V(-0,178)^2+0,43^2+0,75-0,271^2 =0,521 *KH-M;*

M_{B} > M_{A} ,

CnegoBaTenLHo, pacneT HeoOxogHMo BecTH B ceneHHH A. ^KBHBaneHTHoe Hanpn^eHHe npu H3ru6e onpegenneTCH BMpa^eHueM:

o_{3Ke} = $\frac{M_{1KB}}{W}$, *zde* W_x =0,1 d^3;

d> A = $\sqrt[3]{\frac{M_{3K8.}}{0,1\ [o\ ]}}$ = $\sqrt[3]{\frac{1\ 051\ 10^3}{0,1\text{-}170\text{-}10}}$ =0,03954 *M* = 39,54 *MM;*

OKpyrnneM go Onu^anmero Oontmero CTaHgapTHoro 3HaneHHH guaMeTpa Bana: *d*=40 *MM* .

M3M.	^MCT	N° goKyM.	nognMC	gaT

18. KP. 13. 03. 02. nM. ne

3aKnro^eHue

B xoge BMinonHeHuH KypcoBofi paSoTMi nony^eHMi cnegyro^ue pe3ynLTaTMi:

B 3aga^e 1 pacOTuraHa npo^HocTt 3aKpenneHHoro cTep^HH, HaxogH^erocH nog geficTBueM cun. npoBepuB npo^HocTt cTep^HH npu gonycKaeMOM HanpH^eHuu, cgenaH BMiBog ^TO, ycnoBue npo^Hocra BtmonHHeTcH.

B 3aga^e 2 pacOTuraHa npo^HocTt 3aKpenneHHoro cTantHoro Bana, HaxogH^erocH nog geficTBueM KpyTH^ux MOMeHTOB. npu npoBegeHuu npoBepKH Ha npo^HocTt cTep^HH npu gonycKaeMoM Hanpn^eHuu cgenaH BMBog ^TO, Ban He BMigep^uT Harpy3KH.

B 3aga^e 3 nocTpoeHM ^^ropM nonepe^HMix cun u roruSaro^ux MoMeHToB u onpegeneHo onacHoe ce^eHue.

B 3aga^e 4 gnH 3agaHHofi 6anKu 3aga^u 3 onpegeneHM npu gonycKaeMoM HanpH^eHuu no ycnoBuro npo^Hocra pa3MepM nonepe^Horo ce^eHuH B $opMe gByTaBpa u mBennepa. H cgenaHa cpaBHurentHaH TaSnuga oraomeHufi nno^agefi pa3nu^HMx ce^eHufi, gnH onpegeneHuH caMoro BMrogHoro npo^unH ce^eHuH, KaKoBMM oKa3ancH mBennep.

B 3aga^e 5, ucnont3yH ^eTBepTyro Teopuro npo^Hocra (Teopuro HauSontmux KacaTenLHMx HanpH^eHufi), MM pacc^uTanu guaMeTp Bana no u3BecraoMy gonycKaeMoMy HanpH^eHuro [6] = 160 Mna, KoTopMfi Skin oKpyrneH go Snumfimero Sontmero 3Ha^eHuH u3 cTaHgapTHoro pHga rOCTa.

27.12.2021

(gaTa) (nognucb)

					18. KP. 13. 03. 02. nM.	**^MC T**
M3M	**^MC**	**N°**	**nognM**			21

CnucoK ucnon^yeMofi nuTepaTypti

1. HocuneBH^ r.E. npuKnagHan MexaHHKa: ^nn cTygeHToB By30B. PneKTpoHHtrn pecypc] : / r.E. HocuneBuq, n.A. .HeOegeB, B.C. CTpenneB. - ^neKTpoH. gaH. - M. : MamuHocTpoeHue, 2012. - 576 c. - Pe^HM gocTyna: http://e .lanboook . com/books/element.php?p11 id=5794
2. CTenuH n.A. ConpoTHBneHue MaTepuanoB ^neKTpoHHMH pecypc] : y^eOHHK. - ^neKTpoH. gaH. - Cn6. : .HaHt, 2 14. - 340 c. - Pe^HM gocTyna: http://e .lanboook.com/books/element.php?p11 id=3179
3. KapuMOB H. ConpoTHBneHue MaTepuanoB. ^neKTpoHHLIH y^eOHMH Kypc gnn cTygeHTOB O^HOH H 3ao^Hofi $opM oOy^eHHH ^neKTpoHHtrn pecypc]. Pe^HM gocTyna: http://www.soprotmat.ru
4. EenneB H.M. COopHHK 3aga^ no conpoTHBneHuro MaTepuanoB ^neKTpoHHMH pecypc] : y^eOHoe nocoOue / H.M. EenneB, .H.K. napmuH, E.E. MenLHHKoB [u gp.]. - ^neKTpoH. gaH. - Cn6. : .HaHt, 2011. - 431 c. -Pe^HM gocTyna: http://e.lanboook.com/books/element.php?p11 id=2022
5. MuponroOoB H.H. ConpoTHBneHue MaTepuanoB. nocoOue no pemeHHM 3aga^ PneKTpoHHtm pecypc] : y^eOHo-MeTogu^ecKoe nocoOue / H.H. MuponroOoB, 0.3. AnMoMegoB, H.A. KypuguH [u gp.]. - ^neKTpoH. gaH. -CnO. : ^aHL, 2014. - 512 c. - Pe^HM gocTyna: http://e.lanboook.com/books/element.php?p11 id=39150
6. ^yKoB B.r. MexaHHKa. ConpoTHBneHue MaTepuanoB ^neKTpoHHtrn pecypc] : y^eOHoe nocoOue. - ^neKTpoH. gaH. - CnO. : .HaHt, 2012. - 415 c. Pe^HM gocTyna: http://e.lanboook.com/books/element.php?p11 id=3721
7. KapuMoB H. npuKnagHan MexaHHKa. ^neKTpoHHMH Kypc gnn cTygeHToB O^HOH H 3ao^Hofi ^opM oOy^eHHH ^neKTpoHHtrn pecypc]. Pe^HM gocTyna: http://www.prikladmeh.ru
8.

ripnnO>KeHHH

Приложение 1

Чертеж к задаче №1

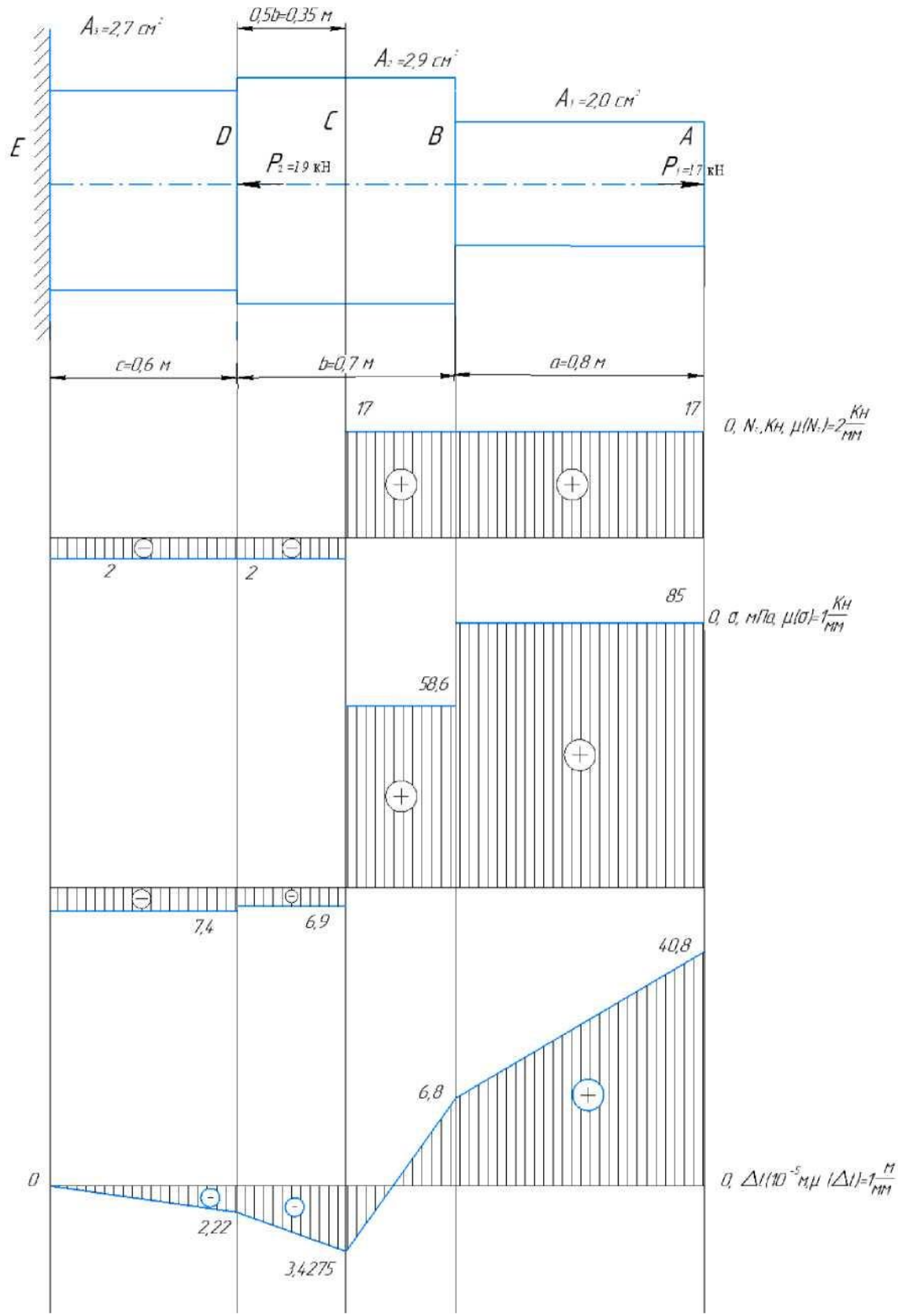

Изм.	Лист	№ докум.	Подпись	Дата	18. КР. 13. 03. 02. ПМ. ПЗ	Лист 24

npHno^eHHe 2

^epTe^ K 3aga^e N2

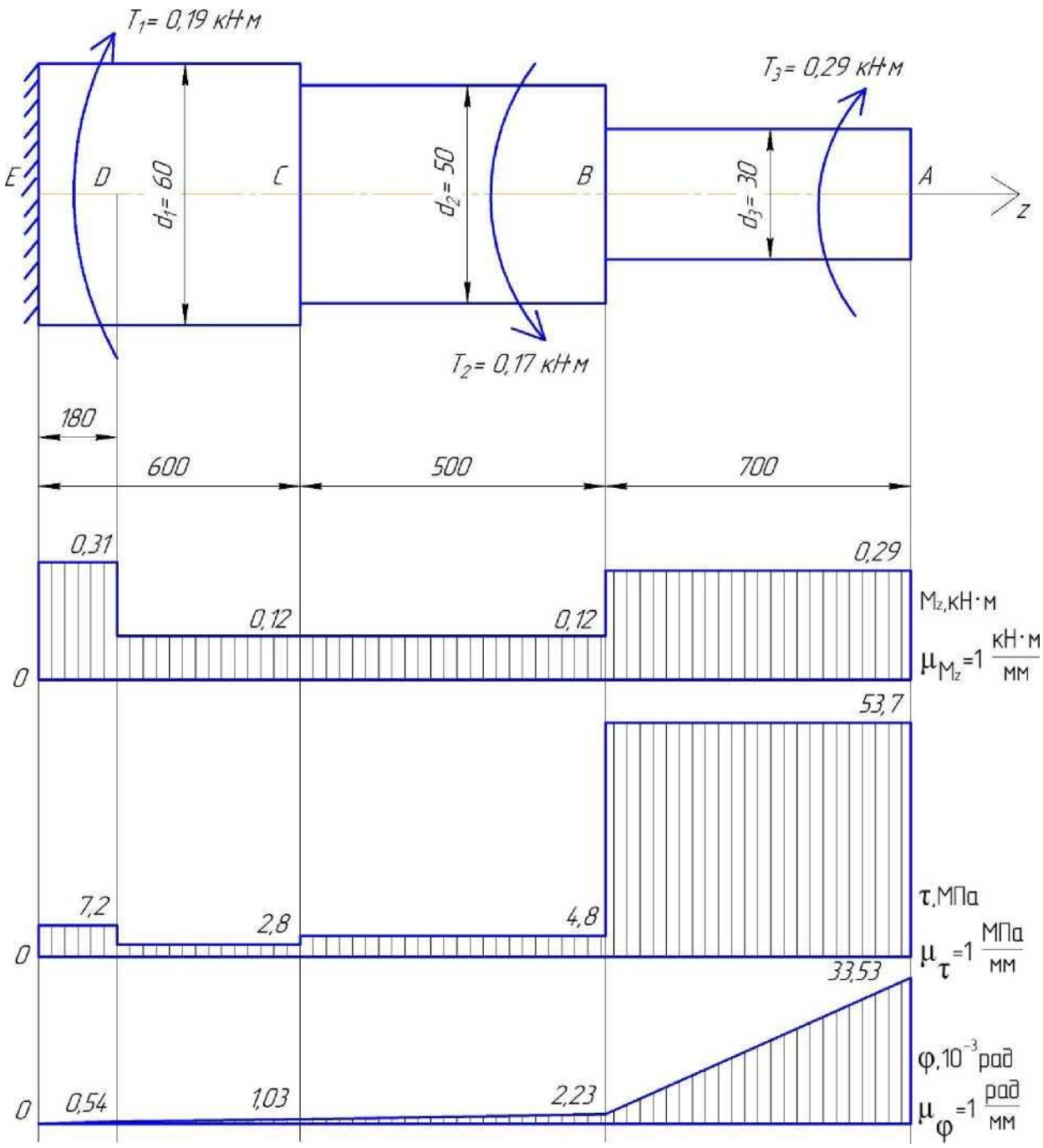

					18. KP. 13. 03. 02. nM.	**^MC T**
						25
M3M	**^MC T**	**N° goKyM**	**nognM C**	**flaT**		

npHno^eHHe 3

^epTe^ K 3aga^e

N3

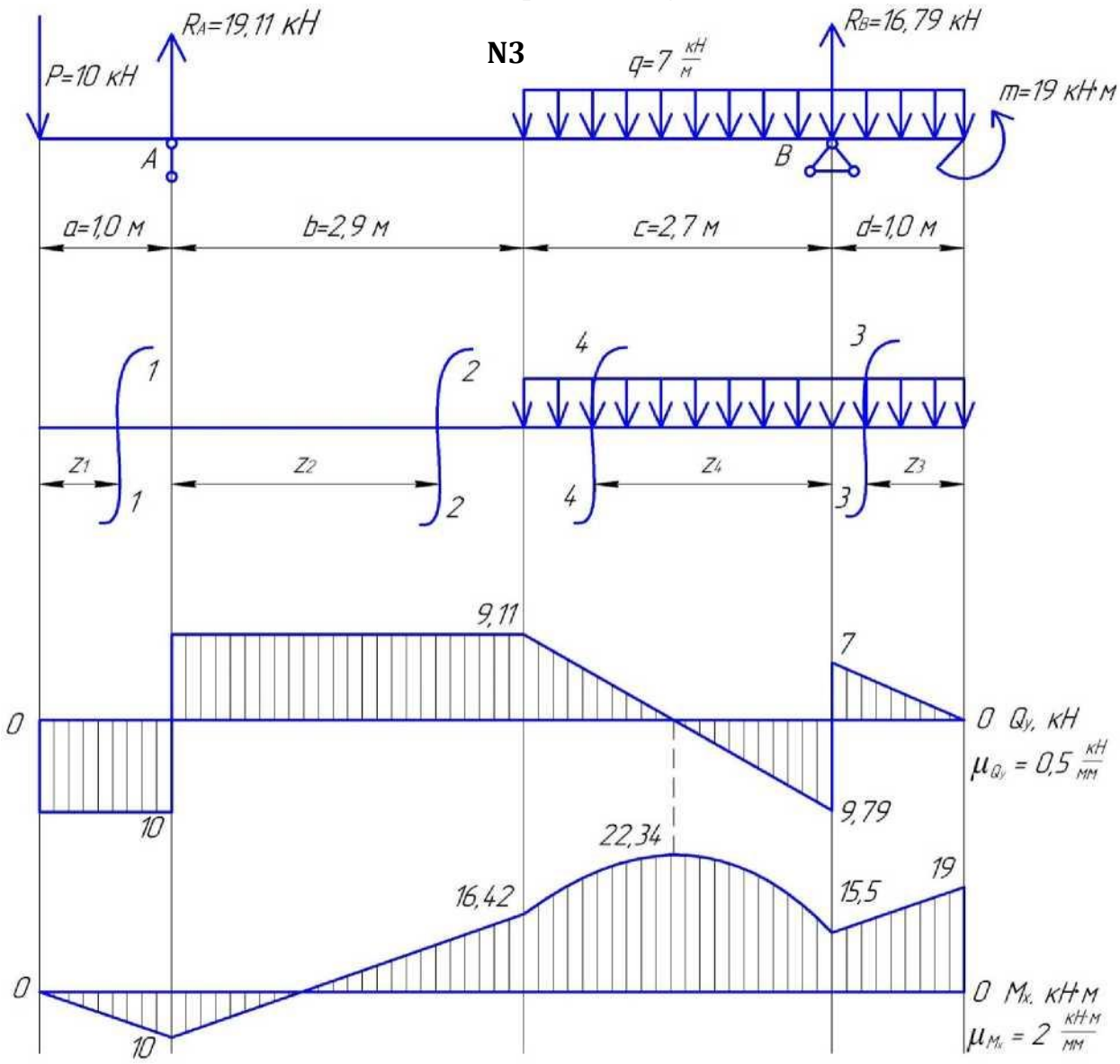

					18. KP. 13. 03. 02. nM.	**^MCT**
M3	**^MC**	**N°**	**nognM**	**flaT**		**26**

Приложение 4

Чертеж к задаче №4

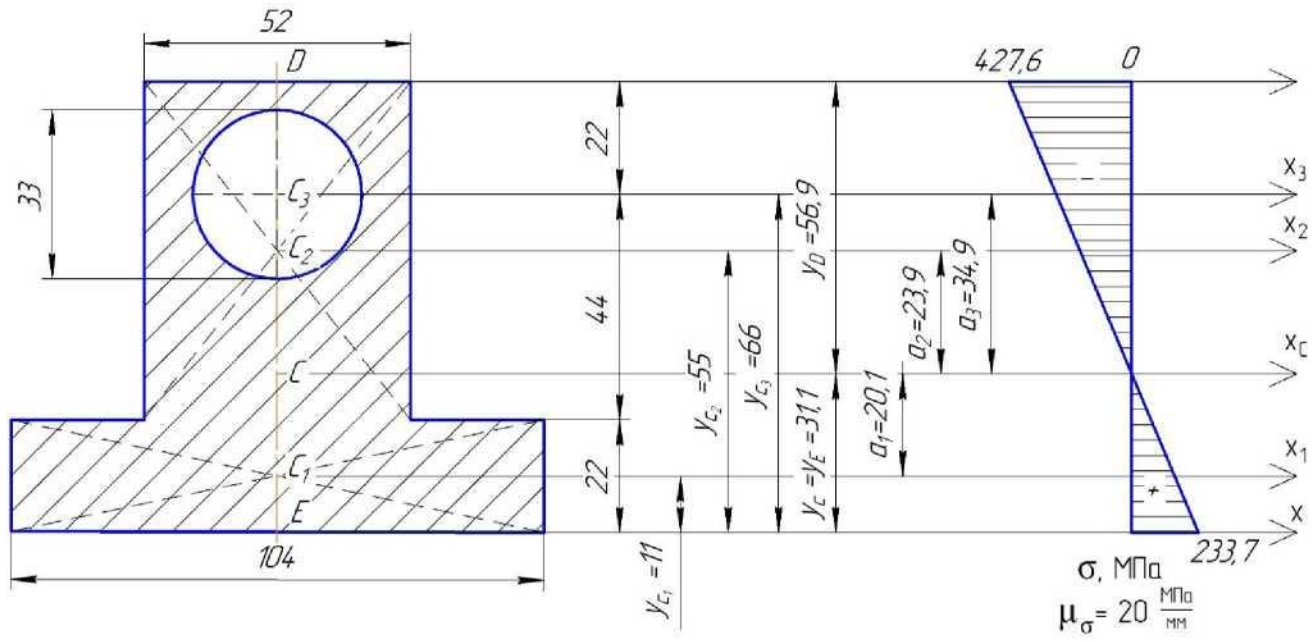

Изм.	Лист	№ докум.	Подпись	Дата	18. КР. 13. 03. 02. ПМ. ПЗ	Лист 27

npHno^eHHe 5 ^epTe^ K 3aga^e N5

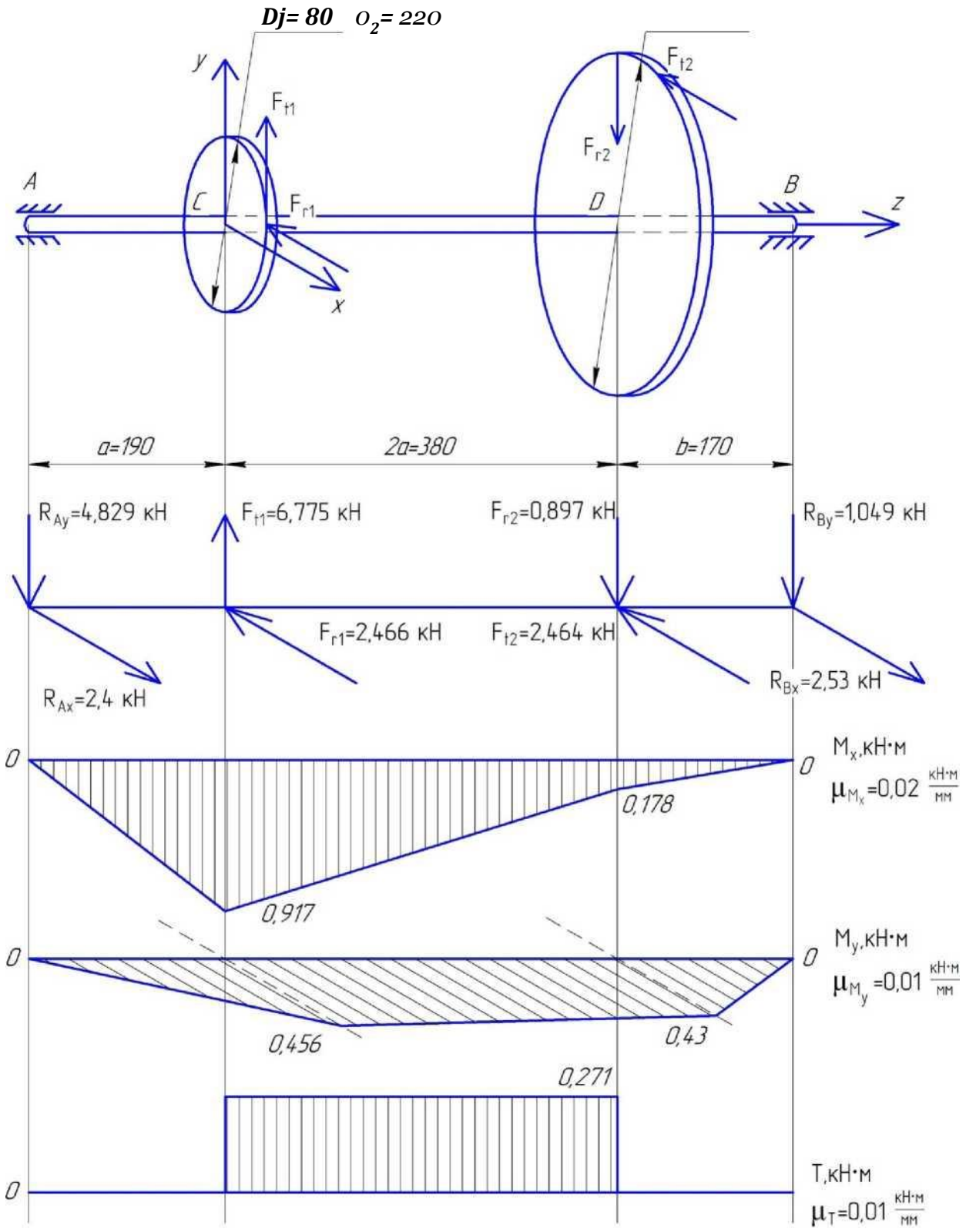

					18. КР. 13. 03. 02. nM.	**^MCT**
						28
M3M	**^MCT**	**N° goKyM**	**nognMC**	**flaT**		