Мікропроцесорна техніка

(лекція 8)
Благітко Б.Я.
2019 р.

PSoC Creator 4.2
Designing with PSoC 3/5

PSoC@3 /5
Stepper Motors

PSoC Creator 4.2
Designing with PSoC 3/5

PSoC@3 /5

Управління кутом повороту ротора крокових двигунів постійного струму

PSoC Creator 4.2
Designing with PSoC 3/5

How They Work

A DC motor uses a commutator to supply continuous direct current to a coil placed between two or more magnets.

A stepper motor receives pulses of electricity from a pulse generator and sends them through a similar coil-magnet setup.

In both cases, the Oersted effect causes the coils to turn the motor's shaft.

Read more: DC Motor vs. Stepper Motor | eHow.com http://www.ehow.com/facts_6777501_dc-motor-vs_-stepper-motor.html#ixzz2QKmmwrgy

Stepper Motor

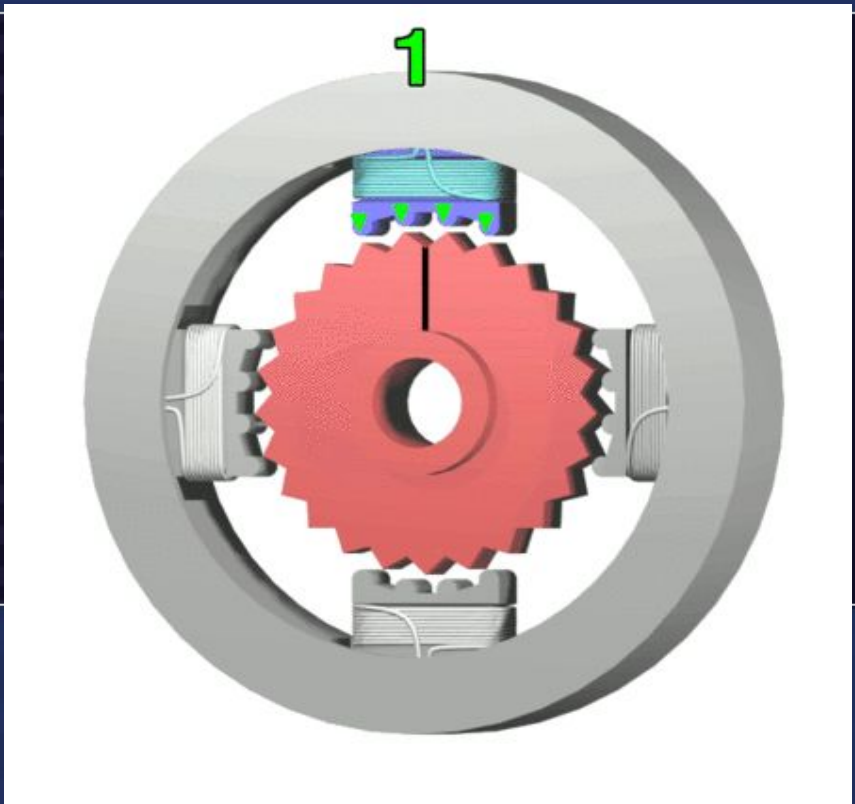

Цифрові модулі

Figure 1-1. Simplified Block Diagram

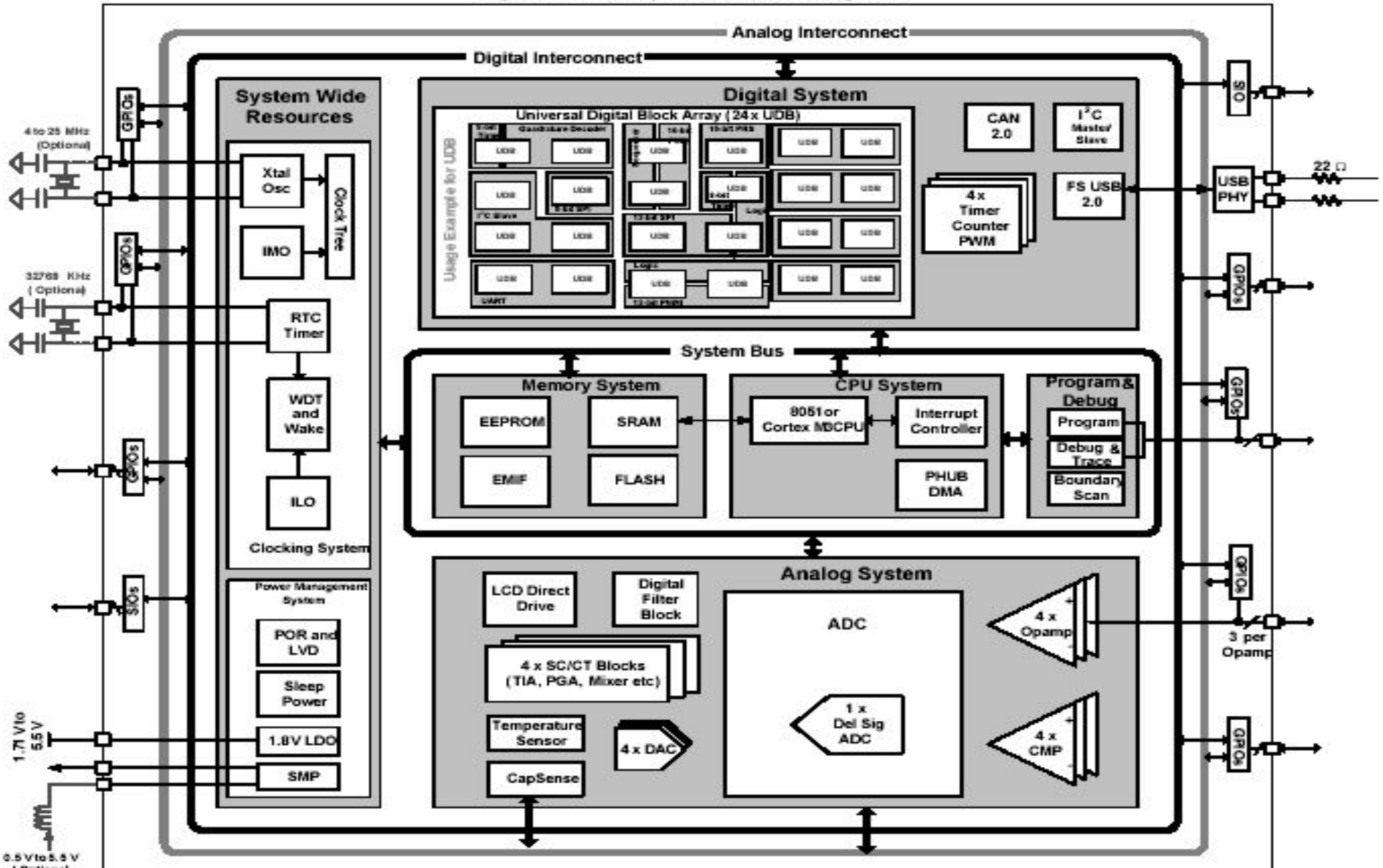

Цифрові модулі

Figure 7-3. Component Catalog

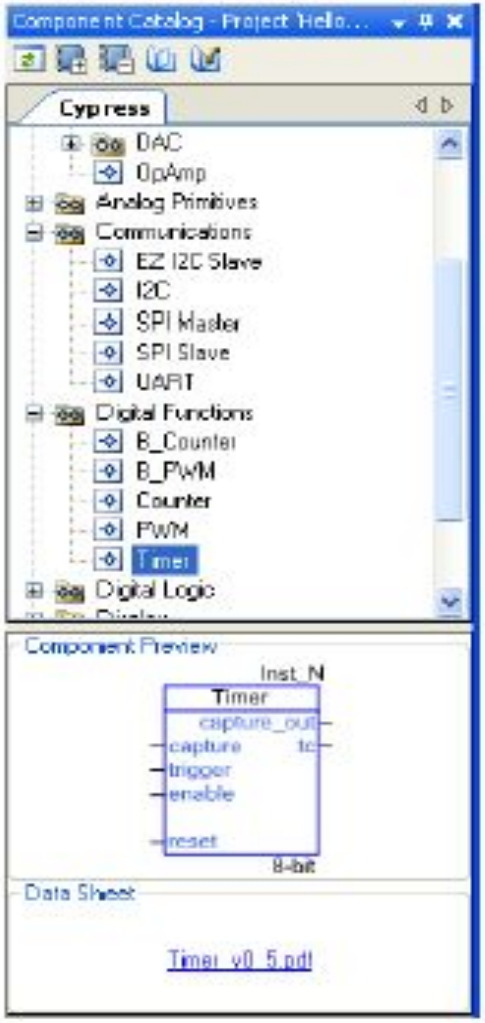

Figure 7-21. Timer/Counter/PWM

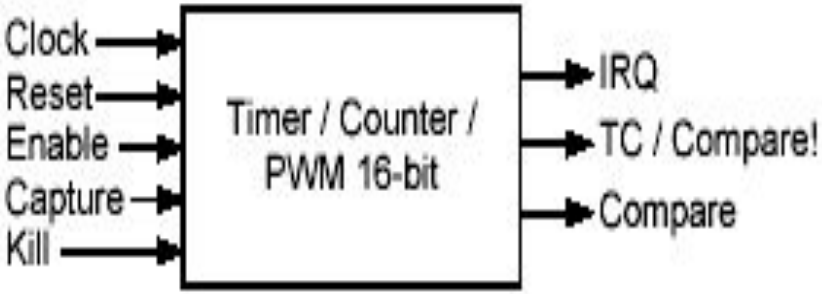

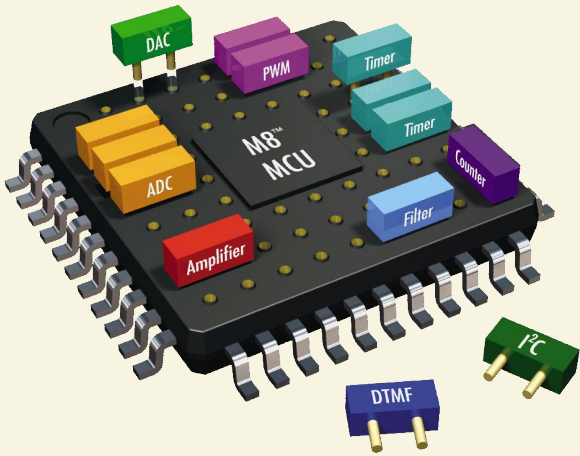

PWMs and Counters

PWMs and **Counter**s share many capabilities but each provides specific capabilities.

When to Use a PWM

The most common use of the **PWM** is to generate periodic waveforms with adjustable duty cycles. The PWM also provides optimized features for power control, motor control, switching regulators and lighting control. The PWM can also be used as a clock divider by driving a clock into the clock input and using the terminal count or a PWM output as the divided clock output.

PWM

Output	May Be Hidden	Description
tc	N	The terminal count output is '1' when the period counter is equal to zero. In normal operation this output will be '1' for a single cycle where the counter is reloaded with period. If the PWM is stopped with the period counter equal to zero then this signal will remain high until the period counter is no longer zero. This output is synchronized to the block clock input of the component.
interrupt	Y	The interrupt output is the logical OR of the group of possible interrupt sources. This signal will go high while any of the enabled interrupt sources are true. The interrupt output shall remain asserted until the Status Register is read out by the software. In order to receive subsequent interrupts, the interrupt shall be cleared by reading the Status Register using the PWM_ReadStatusRegister() API. The interrupt output is not visible if the Use Interrupt parameter is not set. This allows the status register to be removed for resource optimization as necessary.
pwm/pwm1	Y	The pwm or pwm1 output is the first or only pulse width modulated output. This signal is defined by PWM Mode, compare modes(s), and compare value(s) as indicated in waveforms in the Configure dialog. When the instance is configured in one output, Dual Edged, Hardware Select, Center Aligned, or Dither PWM Modes, then the output "pwm" is visible. Otherwise the output "pwm1" is visible with "pwm2" the other pulse width signal. This output is synchronized to the block clock input of the component.

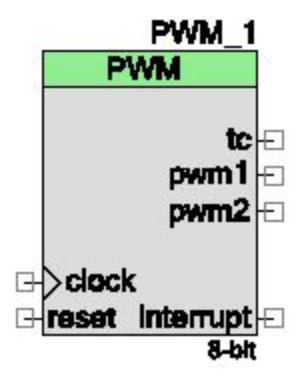

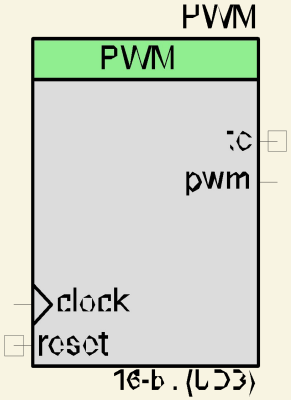

Port's Pins

Figure 6-11. Drive Mode

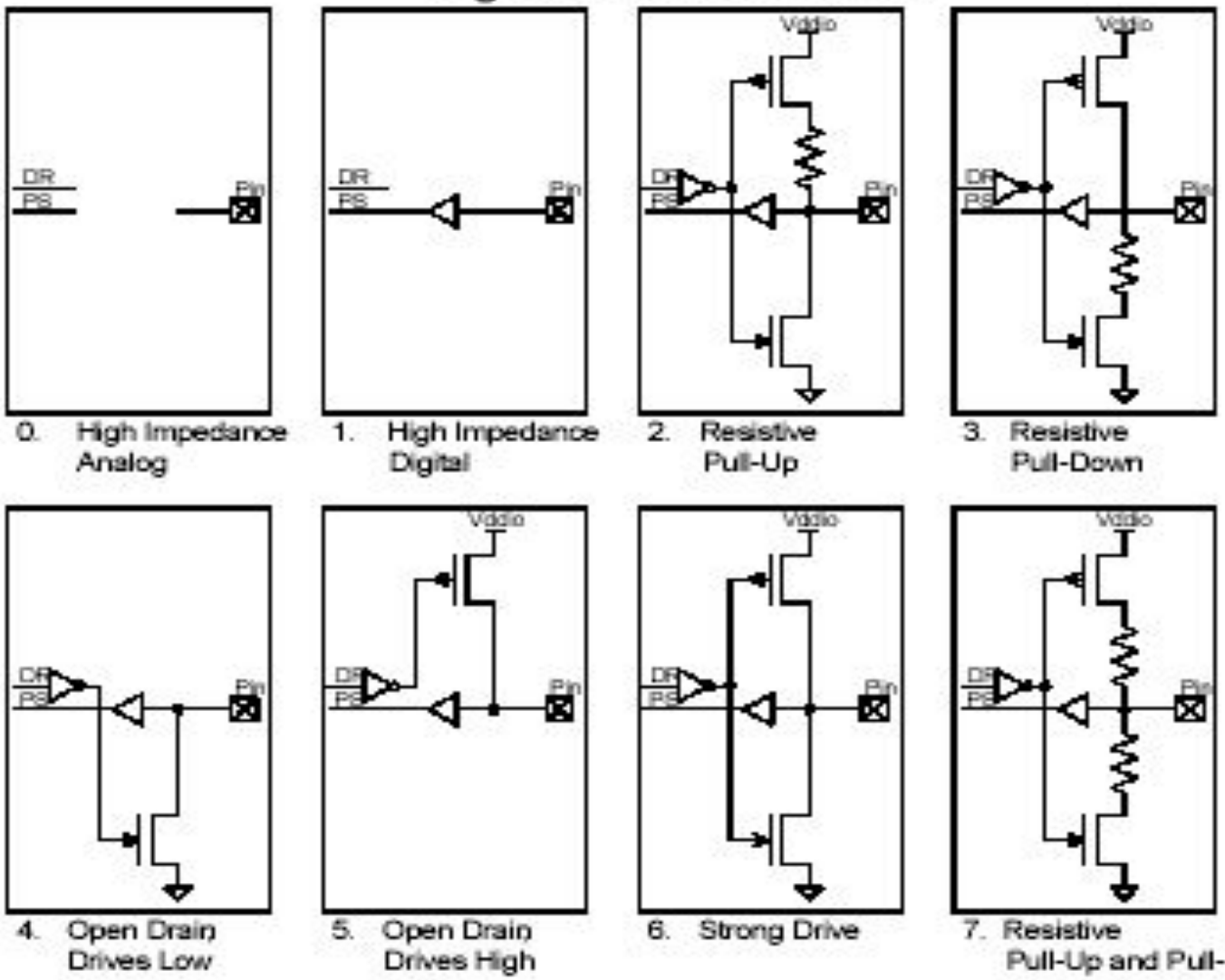

Stepper Motor

TYPICAL APPLICATION

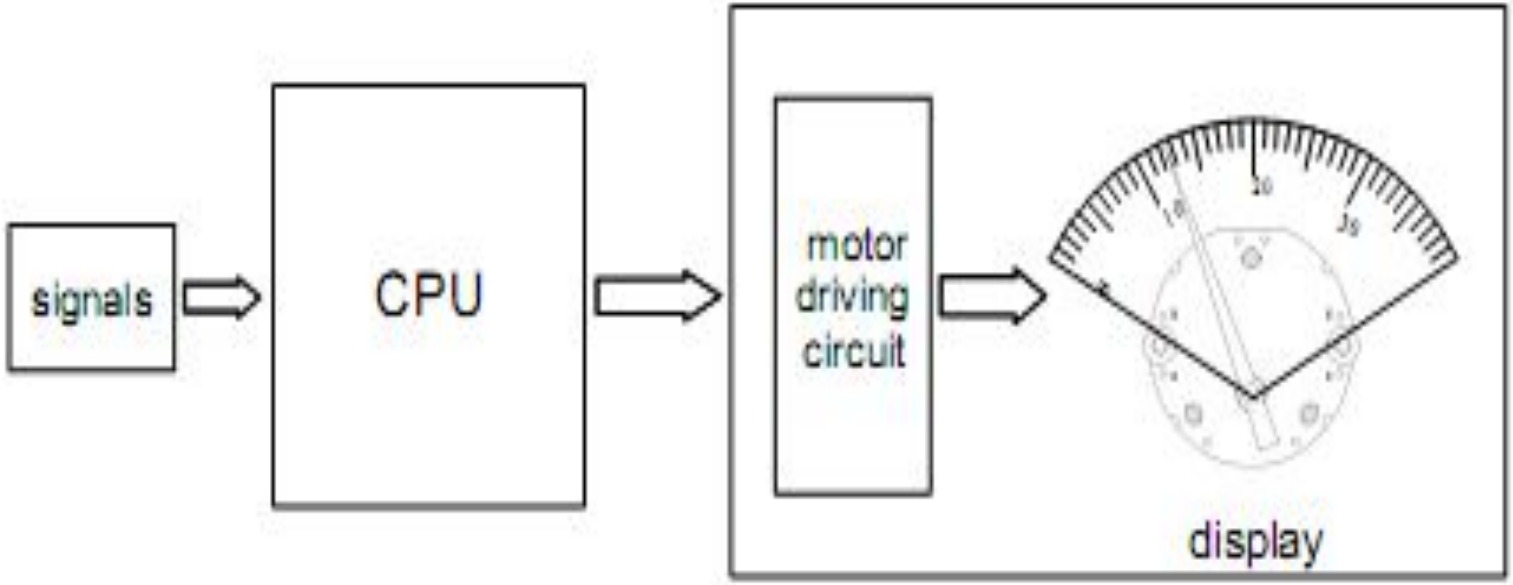

perfect combination of digital accuracy and analog facility

Lab_8 Stepper Motor

MAIN FEATURES

- High speed rotation: 600°/sec.
- High μ-step resolution: 1/12°.
- Wide working voltage: 3.5~10V.
- Wide working temperature: -40 ~ 105℃.
- Low current consumption.
- Extremely robust construction: Φ30mm X 7.6mm.

Lab_8 Stepper Motor

FRAEN AMD’s 6405-15xx stepper motors

Stepper Motors

STEP DEFINITION AND ROTOR MOVEMENT

VID29-**XX** and VID29-**XX**P series motor are driven by 2 sequent logic pulse singnals. Its work diagram is as following:

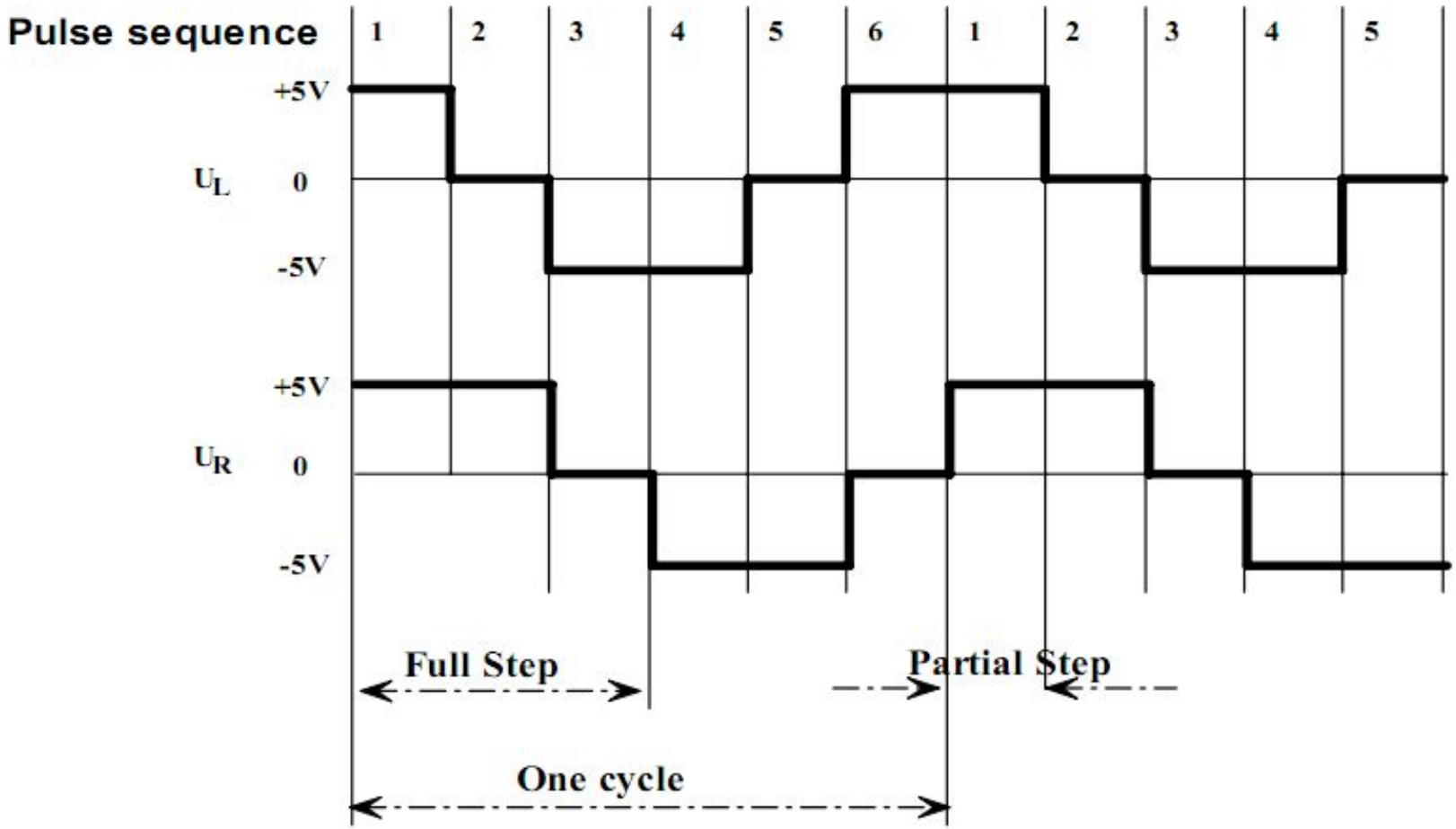

Lab_8 Stepper Motor

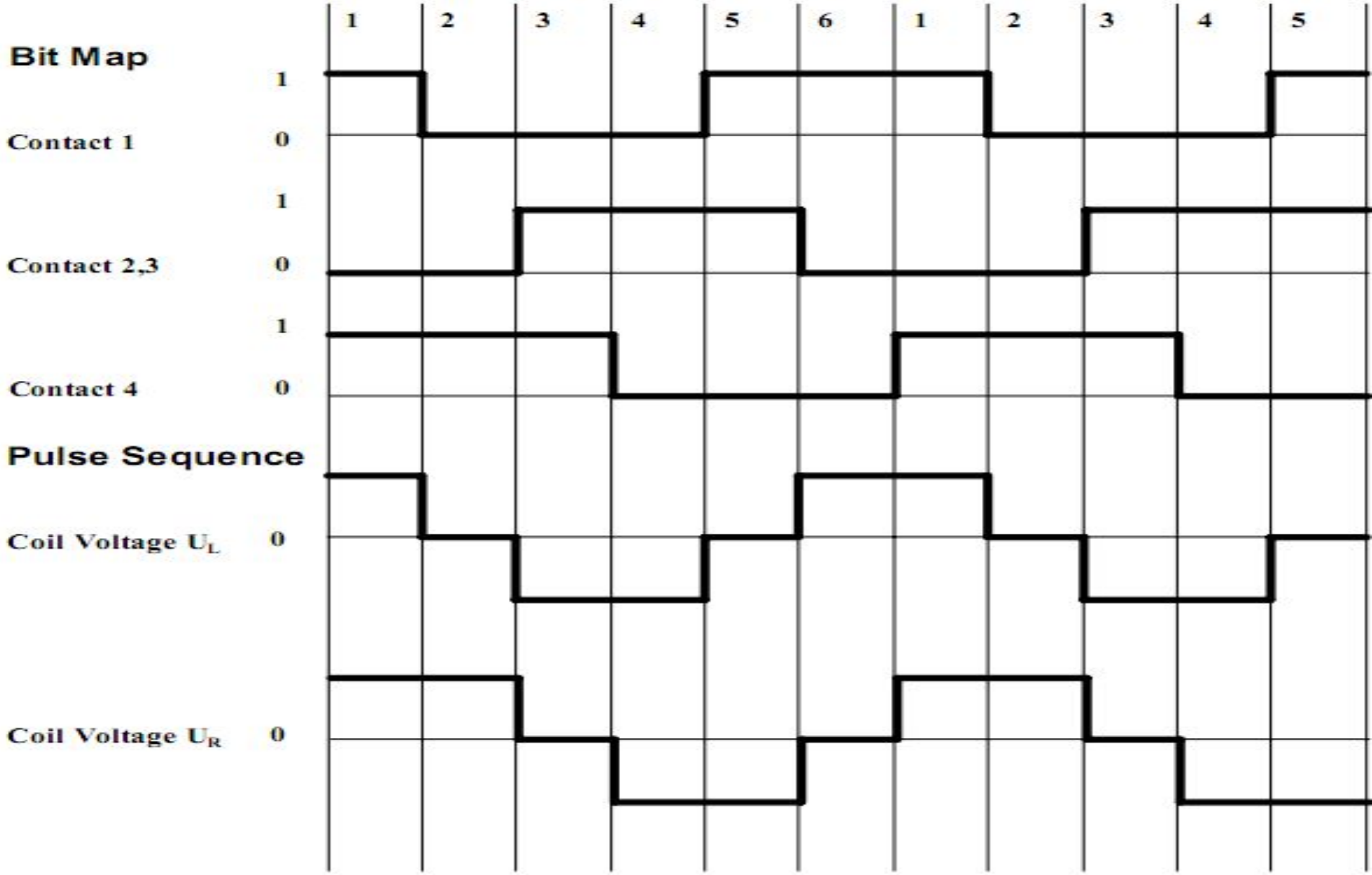

Lab_8 Stepper Motor

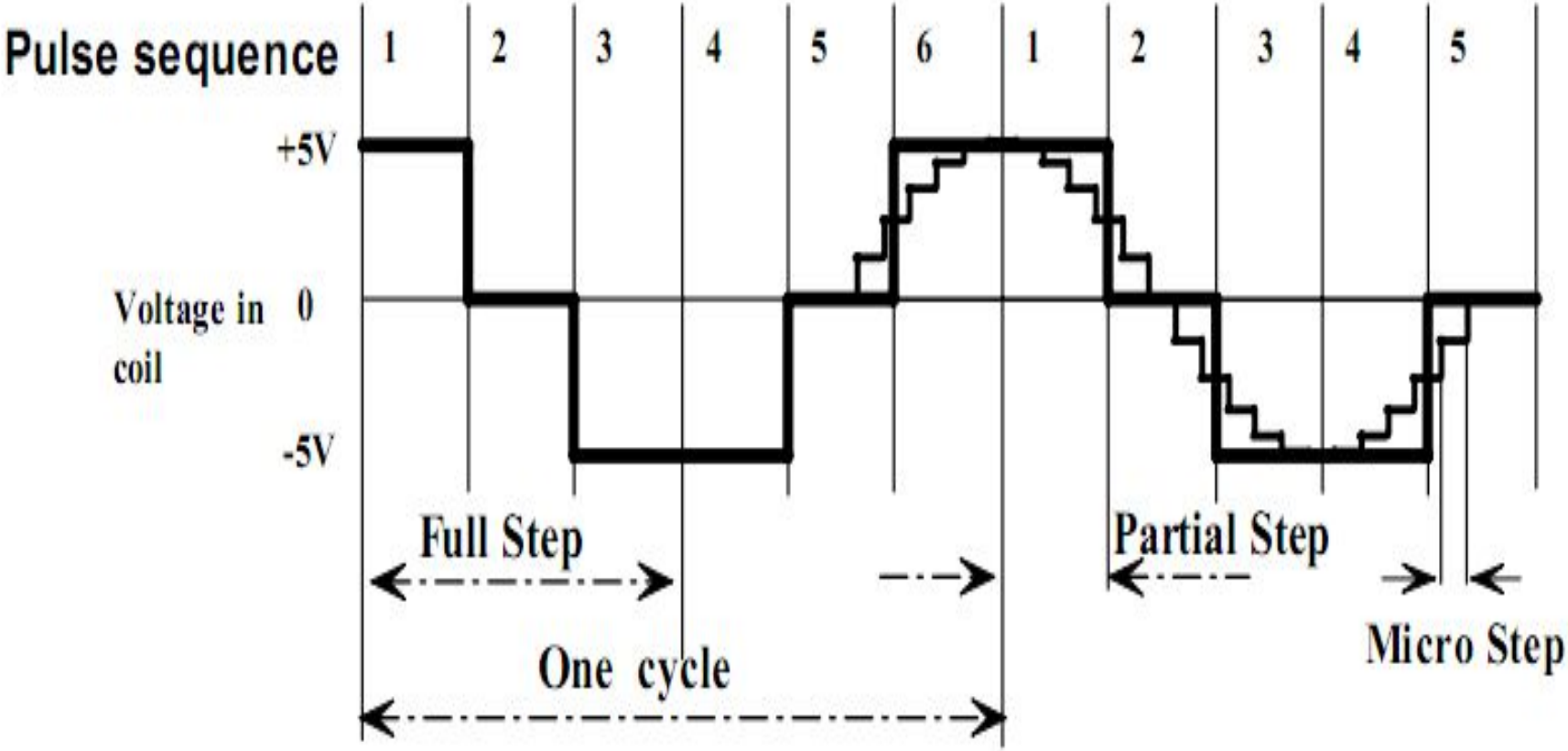

Lab_8 Stepper Motor

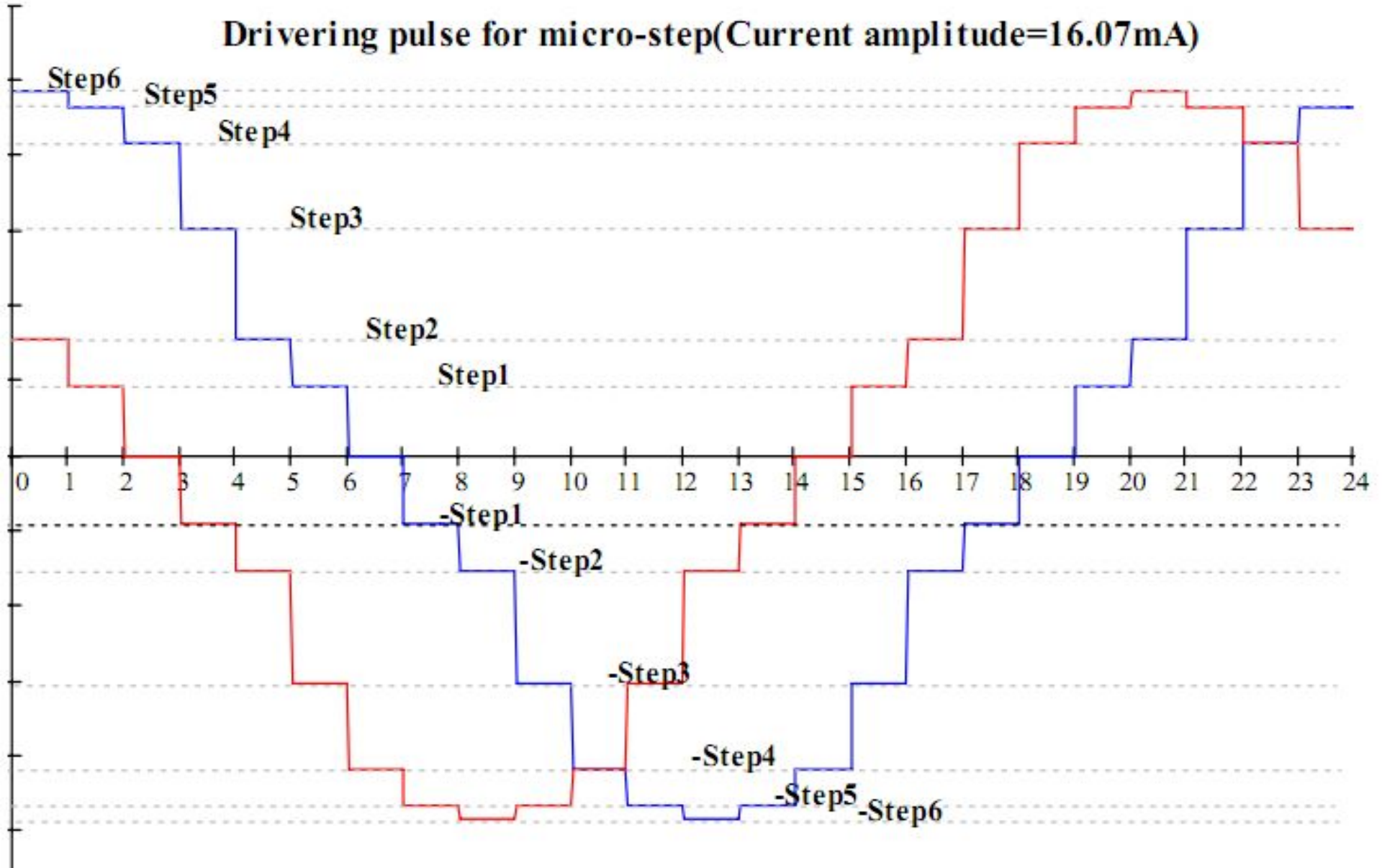

Lab_8 Stepper Motor

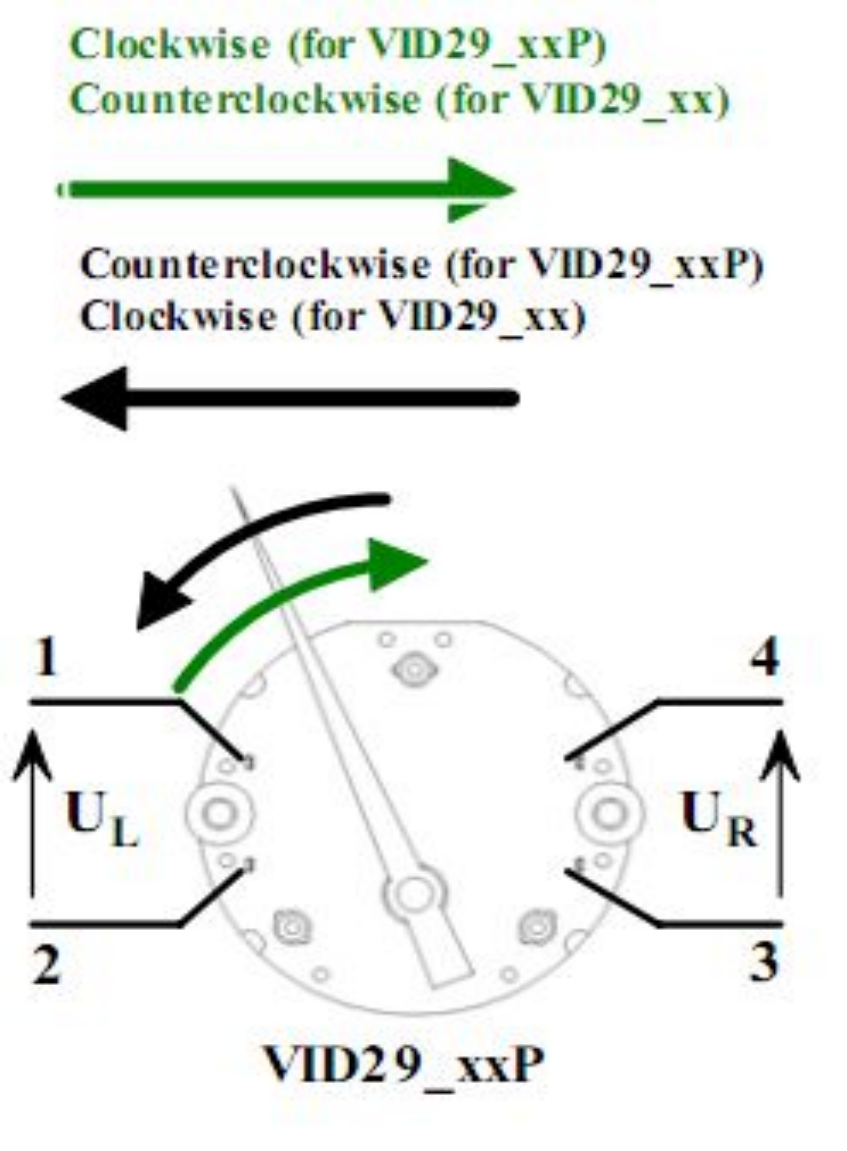

Lab_8 Stepper Motor

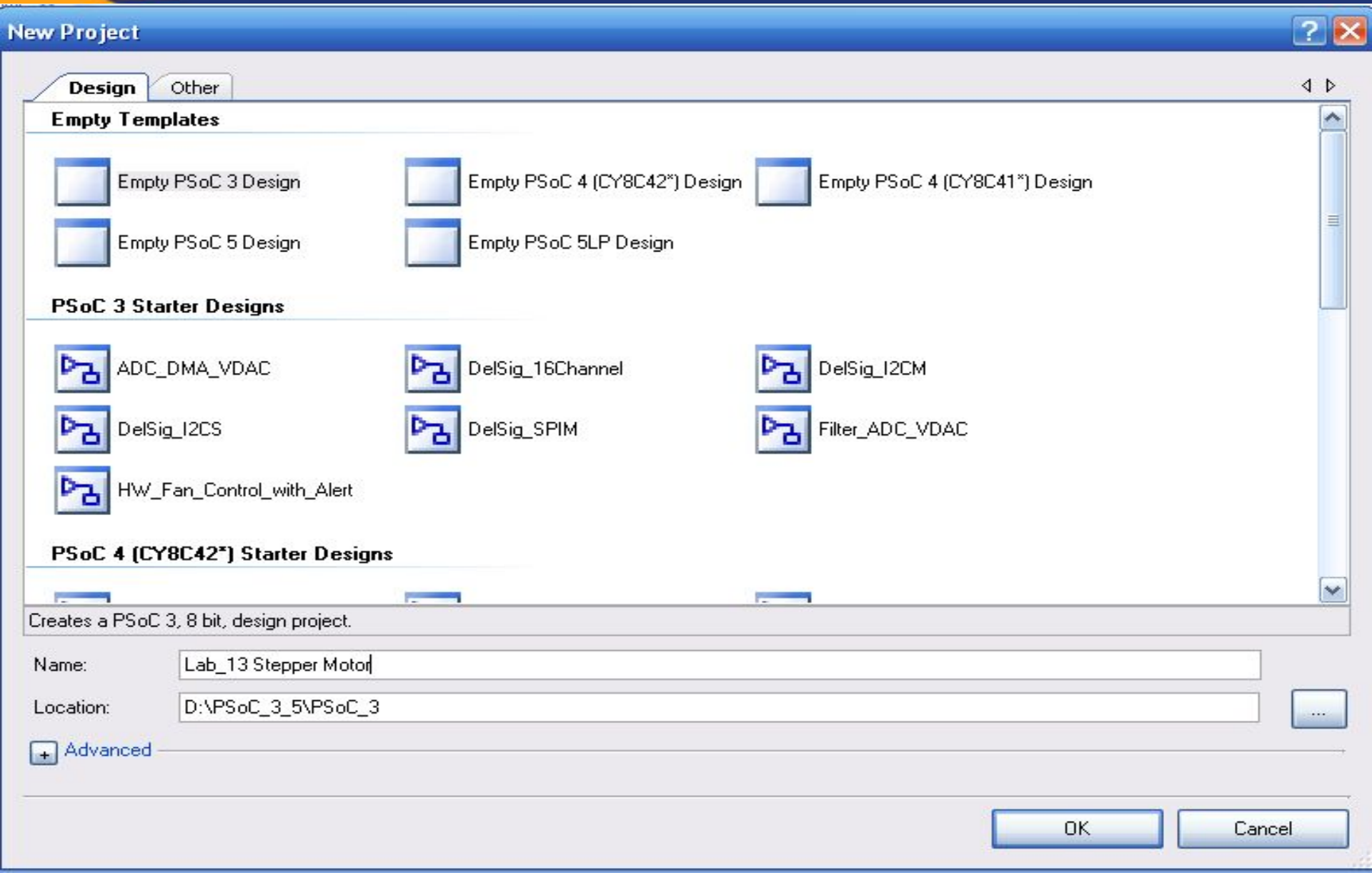

Lab_8 Stepper Motor

Start Page | TopDesign.cysch

PWM_1
PWM
tc
pwm1
pwm2
clock
reset
interrupt

Page 1

Notice List

2 Errors | 0 Warnings | 0 Notes | Go To Error | View Details

Description	File	Error Location
sdb.M0025:No input on Instance "PWM_1", terminal "clock".	TopDesign.cysch	Signal: Net_2,...
sdb.M0050:Terminal "clock" requires connection when it is visible.	TopDesign.cysch	Signal: Net_2,...

Lab_8 Stepper Motor

Start Page | TopDesign.cysch

Configure 'PWM'

Name: PWM_1

Configure | Advanced | Built-in

period: 255 → 0 → 255 → 0

pwm

Implementation: Fixed Function / UDB

Resolution: 8-Bit / 16-Bit

PWM Mode: One Output

Period: 255 | Max | *Period = UNKNOWN SOURCE FREQ*

CMP Value 1: 191

Datasheet | OK | Apply | Cancel

Page 1

Notice List

2 Errors | 0 Warnings | 0 Notes | Go To Error | View Details

Description	File	Error Location
sdb.M0025:No input on Instance "PWM_1", terminal "clock".	TopDesign.cysch	Signal: Net_2,...
sdb.M0050:Terminal "clock" requires connection when it is visible.	TopDesign.cysch	Signal: Net_2,...

Lab_8 Stepper Motor

Start Page | TopDesign.cysch

Configure 'PWM'

Name: PWM_1

Configure | **Advanced** | Built-in

Enable Mode: Software Only

Run Mode: Continuous

Trigger Mode: None

Kill Mode: Asynchronous 1

Capture Mode: None

Interrupts:

- [ ] None
- [x] Interrupt On Terminal Count Event
- [ ] Interrupt On Compare 1 Event
- [ ] Interrupt On Compare 2 Event
- [ ] Interrupt On Kill Event

Datasheet | OK | Apply | Cancel

Page 1

Notice List

2 Errors | 0 Warnings | 0 Notes | Go To Error | View Details

Description	File	Error Location
sdb.M0025:No input on Instance "PWM_1", terminal "clock".	TopDesign.cysch	Signal: Net_2,...
sdb.M0050:Terminal "clock" requires connection when it is visible.	TopDesign.cysch	Signal: Net_2,...

Lab_8 Stepper Motor

Start Page | *TopDesign.cysch

PWM_1
PWM
kill
tc
pwm
clock
reset
interrupt
8-bit (Fixed)
Clock_1
12 MHz

Page 1

Notice List

1 Errors | 0 Warnings | 0 Notes | Go To Error | View Details

Description	File	Error Location
sdb.M0050:Terminal "kill" requires connection when it is visible.	TopDesign.cysch	Signal: Net_22,...

Lab_8 Stepper Motor

Start Page | *TopDesign.cysch

Configure 'cy_clock'

Name: Clock_1

Basic | Advanced | Built-in

Clock type: New Existing

Source: <Auto>

Specify: Frequency: 8 kHz

Tolerance: 5% + 5%

Summary

API Generated: Yes

Uses Clock Tree Resource: Yes

By default, all clocks are marked as 'start on reset'. The setting can be changed in the Design Wide Resources editor.

Datasheet | OK | Apply | Cancel

Page 1

Notice List

1 Errors | 0 Warnings | 0 Notes | Go To Error | View Details

Description	File	Error Location
sdb.M0050:Terminal "kill" requires connection when it is visible.	TopDesign.cysch	Signal: Net_22,...

Lab_8 Stepper Motor

Start Page | *TopDesign.cysch

PWM_1
PWM

Configure 'PWM'

Name: PWM_1

Configure | Advanced | Built-in

period: 255 — 0 — 255 — 0

pwm

Implementation: Fixed Function / UDB

Resolution: 8-Bit / 16-Bit

PWM Mode: One Output

Period: 255 Max *Period = 32ms*

CMP Value 1: 191

Datasheet | OK | Apply | Cancel

Page 1

Notice List

1 Errors | 0 Warnings | 0 Notes | Go To Error | View Details

Description	File	Error Location
sdb.M0050:Terminal "kill" requires connection when it is visible.	TopDesign.cysch	Signal: Net_22,...

Lab_8 Stepper Motor

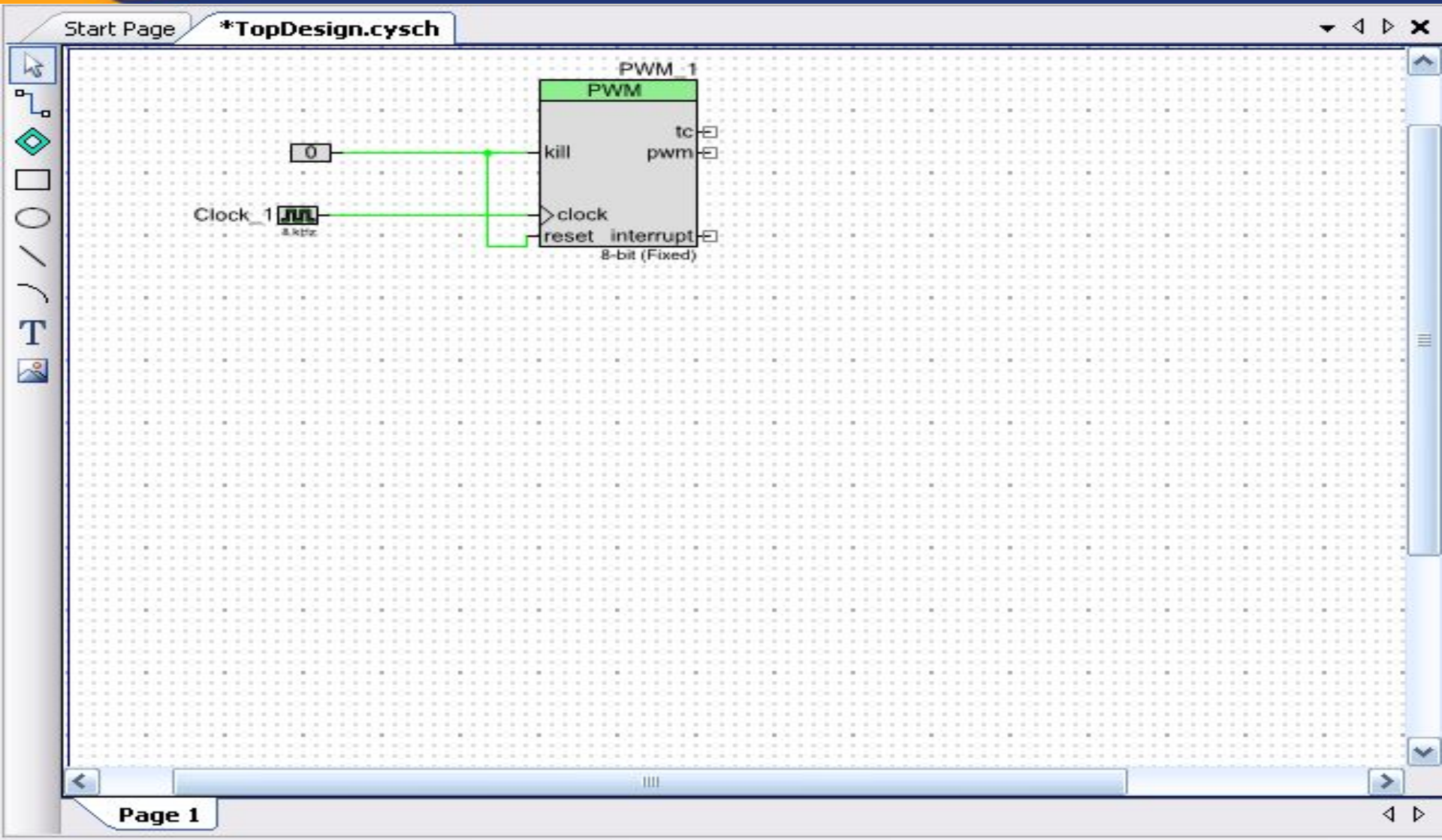

Lab_8 Stepper Motor

Start Page | *TopDesign.cysch

Configure 'cy_constant'

Name: cy_constant_1

Basic | Built-in

Parameter	Value
DisplayAsHex	false
Value	0
Width	1

Parameter Information

DisplayAsHex: Display value as hexadecimal (true) or decimal (false).
Value:
Type: bool

Datasheet | OK | Apply | Cancel

Page 1

Notice List

0 Errors | 0 Warnings | 0 Notes | Go To Error | View Details

Lab_8 Stepper Motor

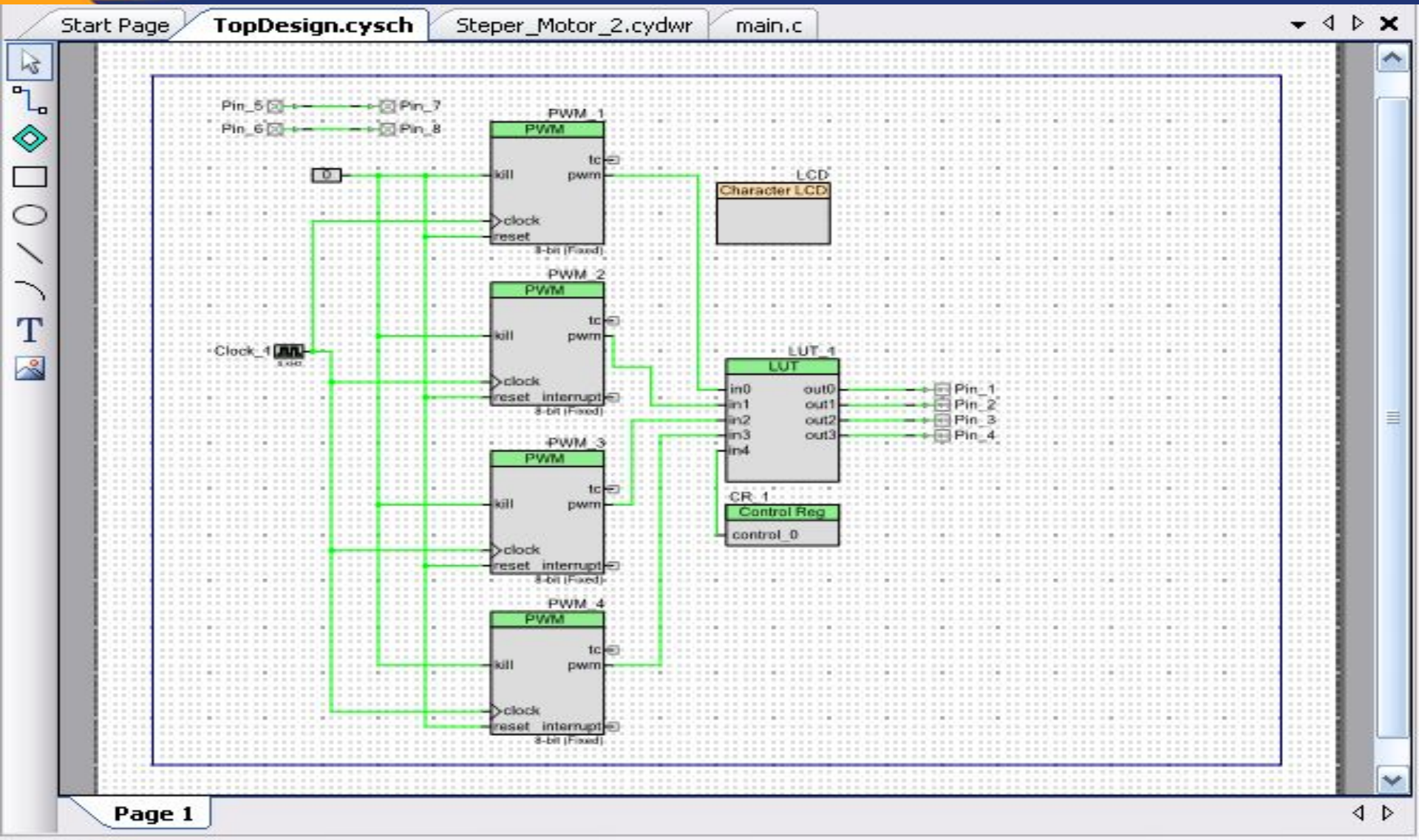

Lab_8 Stepper Motor

Start Page | TopDesign.cysch | Steper_Motor_2.cydwr | main.c

Configure 'CyControlReg'

Name: CR_1

Configure | Built-in

Outputs 1

Display as bus

External reset

Bit	Mode	Initial value
0	Direct	0

Direct | Set all modes

Datasheet | OK | Apply | Cancel

Page 1

Notice List

0 Errors | 0 Warnings | 0 Notes | Go To Error | View Details

Configuration Lucup Table

Configure 'LUT'

Name: LUT_1

Configure | Built-in

Inputs 5 | Outputs 4 | Register Outputs

Input Hex Value	in4	in3	in2	in1	in0		out3	out2	out1	out0	Outpu Hex Value
0x00	0	0	0	0	0		0	0	0	0	0x00
0x01	0	0	0	0	1		0	0	0	0	0x00
0x02	0	0	0	1	0		0	0	0	0	0x00
0x03	0	0	0	1	1		0	0	0	0	0x00
0x04	0	0	1	0	0		0	0	0	0	0x00

Set All | Clear All

Datasheet | OK | Apply | Cancel

Page 1

Notice List

0 Errors | 0 Warnings | 0 Notes | Go To Error | View Details

Configuration Lucup Table

Start Page | TopDesign.cysch | Steper_Motor_2.cydwr | main.c

Configure 'LUT'

Name: LUT_1

Configure | Built-in

Inputs: 5 Outputs: 4 Register Outputs

Input Hex Value	in4	in3	in2	in1	in0		out3	out2	out1	out0	Output Hex Value
0x0E	0	1	1	1	0		0	0	0	0	0x00
0x0F	0	1	1	1	1		0	0	0	0	0x00
0x10	1	0	0	0	0		0	0	0	0	0x00
0x11	1	0	0	0	1		0	0	0	1	0x01
0x12	1	0	0	1	0		0	0	1	0	0x02

Set All | Clear All

Datasheet | OK | Apply | Cancel

Page 1

Notice List

0 Errors | 0 Warnings | 0 Notes | Go To Error | View Details

0x00	0	0	0	0	0	0	0	0	0	0x00
0x01	0	0	0	0	1	0	0	0	0	0x00
0x02	0	0	0	1	0	0	0	0	0	0x00
0x03	0	0	0	1	1	0	0	0	0	0x00
0x04	0	0	1	0	0	0	0	0	0	0x00
0x05	0	0	1	0	1	0	0	0	0	0x00
0x06	0	0	1	1	0	0	0	0	0	0x00
0x07	0	0	1	1	1	0	0	0	0	0x00
0x08	0	1	0	0	0	0	0	0	0	0x00
0x09	0	1	0	0	1	0	0	0	0	0x00
0x0A	0	1	0	1	0	0	0	0	0	0x00
0x0B	0	1	0	1	1	0	0	0	0	0x00
0x0C	0	1	1	0	0	0	0	0	0	0x00
0x0D	0	1	1	0	1	0	0	0	0	0x00
0x0E	0	1	1	1	0	0	0	0	0	0x00
0x0F	0	1	1	1	1	0	0	0	0	0x00
0x10	1	0	0	0	0	0	0	0	0	0x00
0x11	1	0	0	0	1	0	0	0	1	0x01
0x12	1	0	0	1	0	0	0	1	0	0x02
0x13	1	0	0	1	1	0	0	1	1	0x03
0x14	1	0	1	0	0	0	1	0	0	0x04
0x15	1	0	1	0	1	0	1	0	1	0x05
0x16	1	0	1	1	0	0	1	1	0	0x06
0x17	1	0	1	1	1	0	1	1	1	0x07
0x18	1	1	0	0	0	1	0	0	0	0x08
0x19	1	1	0	0	1	1	0	0	1	0x09
0x1A	1	1	0	1	0	1	0	1	0	0x0A
0x1B	1	1	0	1	1	1	0	1	1	0x0B
0x1C	1	1	1	0	0	1	1	0	0	0x0C
0x1D	1	1	1	0	1	1	1	0	1	0x0D
0x1E	1	1	1	1	0	1	1	1	0	0x0E

Lab_8 Stepper Motor

Start Page | TopDesign.cysch | **Steper_Motor_2.cydwr** | main.c

CY8C3866AXI-040
100-TQFP

Alias	Name	Port	Pin	Lo
	\LCD:LCDPort[6:0]\	P2[6:0]	95..99,1..2	
	Pin_1	P0[1] OpAmp:out	72	
	Pin_2	P0[2] OpAmp+	73	
	Pin_3	P0[3] OpAmp-, DSM:ExtVref	74	
	Pin_4	P0[4] OpAmp+	76	
	Pin_5	P0[0] OpAmp:out	71	
	Pin_6	P0[5] OpAmp-	77	
	Pin_7	P0[6] IDAC:HI	78	
	Pin_8	P0[7] IDAC:HI	79	

LCD_LCDPort_6 - Digital
LCD_LCDPort_5 - Digital

Pins | Analog | Clocks | Interrupts | DMA | System | Directives | Flash Security

Notice List

0 Errors | 0 Warnings | 0 Notes | Go To Error | View Details

Stepper Motor PSoC@3/5

Start Page | TopDesign.cysch | Steper_Motor_2.cydwr | *main.c

```c
/* ========================================
 *
 * Copyright YOUR COMPANY, THE YEAR
 * All Rights Reserved
 * UNPUBLISHED, LICENSED SOFTWARE.
 *
 * CONFIDENTIAL AND PROPRIETARY INFORMATION
 * WHICH IS THE PROPERTY OF your company.
 *
 * ========================================
 */


#include <device.h>
#include <stdlib.h>
#include <string.h>




int pin_pwm_1; int pin_pwm_2; int pin_pwm_3; int pin_pwm_4; // Піни PWM(1-4)
int b_1; int b_2; // Піни кнопок(1-2)
int delay_period; // Пауза періода після старта PWM
int N; // Кількість мікрорухів для повного оберту
int temp; int temp2; int temp3;
```

Output

Show output from: All

```
--------------- Build Succeeded: 05/17/2013 07:23:43 ---------------
```

Stepper Motor PSoC@3/5

Start Page | TopDesign.cysch | Steper_Motor_2.cydwr | *main.c

```c
20
21  int pin_pwm_1; int pin_pwm_2; int pin_pwm_3; int pin_pwm_4; // Піни PWM(1-4)
22  int b_1; int b_2; // Піни кнопок(1-2)
23  int delay_period; // Пауза періода після старта PWM
24  int N; // Кількість мікрорухів для повного оберту
25  int temp; int temp2; int temp3;
26
27  void PWM1(void) {PWM_1_Start(); CyDelay(delay_period);}
28  // pin_pwm_1=LED_PWM_1_Read(); while (pin_pwm_1==1) {pin_pwm_1=LED_PWM_1_Read();};}
29
30  void PWM2(void) {PWM_2_Start(); CyDelay(delay_period);}
31  // pin_pwm_2=LED_PWM_2_Read(); while (pin_pwm_2==1) {pin_pwm_2=LED_PWM_2_Read();};}
32
33  void PWM3(void) {PWM_3_Start(); CyDelay(delay_period);}
34  // pin_pwm_3=LED_PWM_3_Read(); while (pin_pwm_3==1) {pin_pwm_3=LED_PWM_3_Read();};}
35
36  void PWM4(void) {PWM_4_Start(); CyDelay(delay_period);}
37  // pin_pwm_4=LED_PWM_4_Read(); while (pin_pwm_4==1) {pin_pwm_4=LED_PWM_4_Read();};}
38
39  void PWM_ALL_STOP(void) {PWM_1_Stop(); PWM_2_Stop(); PWM_3_Stop(); PWM_4_Stop();}
40
41  void SIDE_1(int NN) {for (temp=0; temp<NN; temp++) {PWM1(); PWM2(); PWM3(); PWM4();} PWM_AL
42  void SIDE_2(int NN) {for (temp=0; temp<NN; temp++) {PWM1(); PWM4(); PWM3(); PWM2();} PWM_AL
43
44  void READ_BUTTONS(void) {CyDelay(10); b_1=Pin_5_Read(); b_2=Pin_6_Read();}
45
```

Output

Show output from: All

```
--------------- Build Succeeded: 05/17/2013 07:23:43 ---------------
```

Stepper Motor PSoC@3/5

Start Page | TopDesign.cysch | Steper_Motor_2.cydwr | *main.c

```
35
36 void PWM4(void) {PWM_4_Start(); CyDelay(delay_period);}
37 // pin_pwm_4=LED_PWM_4_Read(); while (pin_pwm_4==1) {pin_pwm_4=LED_PWM_4_Read();}
38
39 void PWM_ALL_STOP(void) {PWM_1_Stop(); PWM_2_Stop(); PWM_3_Stop(); PWM_4_Stop();}
40
41 void SIDE_1(int NN) {for (temp=0; temp<NN; temp++) {PWM1(); PWM2(); PWM3(); PWM4(
42 void SIDE_2(int NN) {for (temp=0; temp<NN; temp++) {PWM1(); PWM4(); PWM3(); PWM2(
43
44 void READ_BUTTONS(void) {CyDelay(10); b_1=Pin_5_Read(); b_2=Pin_6_Read();}
45
46 void MOTOR(char motor, char way, char period)
47 {
48     CR_1_Write(0);
49     if (motor=='L') {CR_1_Write (1); }//if (way=='U') {way='D';} else {way='U';}}
50
51     if (motor=='L')
52      {
53     if ((way=='U')&&(period=='M')) {SIDE_1(N*1);} // ліва вверх четвертинно
54
55     if ((way=='D')&&(period=='M')) {SIDE_2(N*1);} // ліва вниз четвертинно
56      }
57
58 }
59
60
```

Output

Show output from: All

```
---------------- Build Succeeded: 05/17/2013 07:23:43 ----------------
```

Stepper Motor PSoC@3/5

Start Page | TopDesign.cysch | Steper_Motor_2.cydwr | *main.c

```c
50
51      if (motor=='L')
52          {
53      if ((way=='U')&&(period=='M')) {SIDE_1(N*1);} // ліва вверх четвертинно
54
55      if ((way=='D')&&(period=='M')) {SIDE_2(N*1);} // ліва вниз четвертинно
56          }
57
58  }
59
60  void main()
61  {
62      Clock_1_Enable();
63      delay_period=1;
64      N=20;
65      MOTOR('L','U','M');
66      //MOTOR('L','D','M');
67      /* Place your initialization/startup code here (e.g. MyInst_Start()) */
68
69      /* CyGlobalIntEnable; */ /* Uncomment this line to enable global interrupts. */
70      for(;;)
71      {
72          /* Place your application code here. */
73      }
74  }
75
76  /* [] END OF FILE */
```

Output

Show output from: All

```
---------------- Build Succeeded: 05/17/2013 07:23:43 ----------------
```

РОБОТ-АВТОМАТ НА ПЛАТФОРМІ PSoC@3 /5

Робот-автомат виконує встановлення та утримання в заданому положенні кута повороту роторів чотирьох мікро-потужних крокових електродвигунів постійного струму в залежності від заданих режимів роботи та керується двома імпульсними сигналами, які подаються на два електромагніти зміщені в просторі на один градус.

Stepper Motor PSoC@3/5

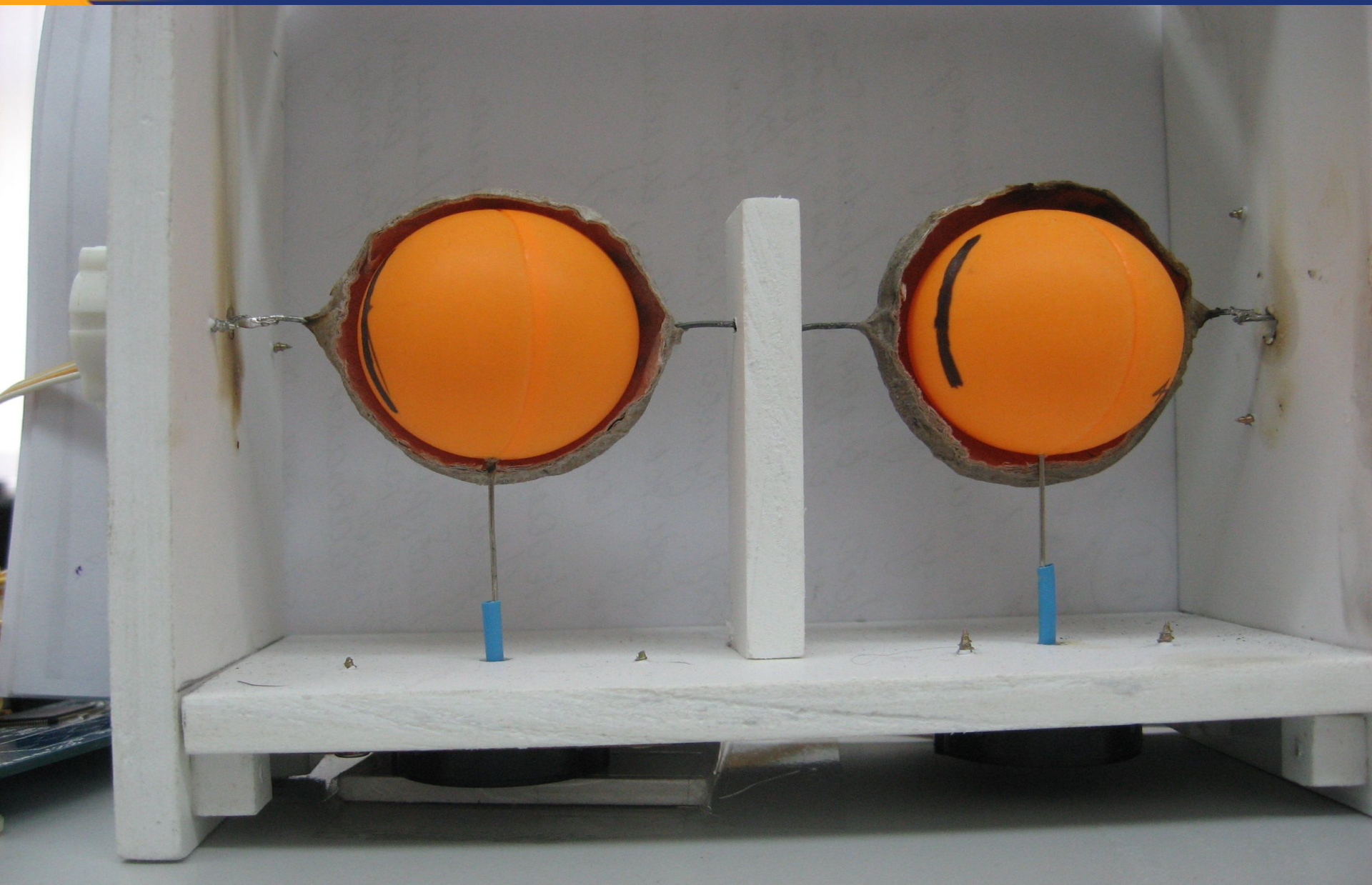

Stepper Motor PSoC@3/5

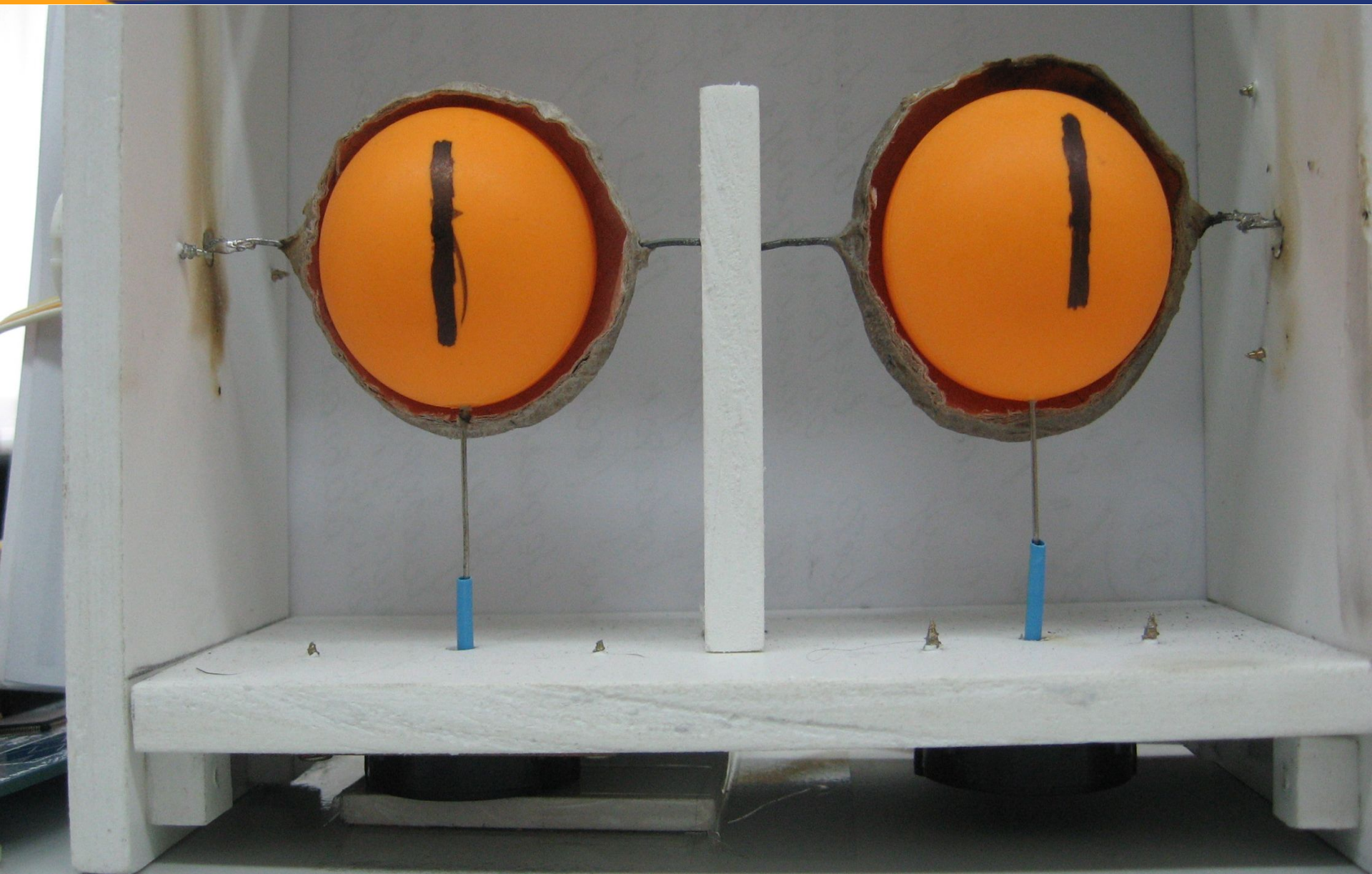

Stepper Motor PSoC@3/5

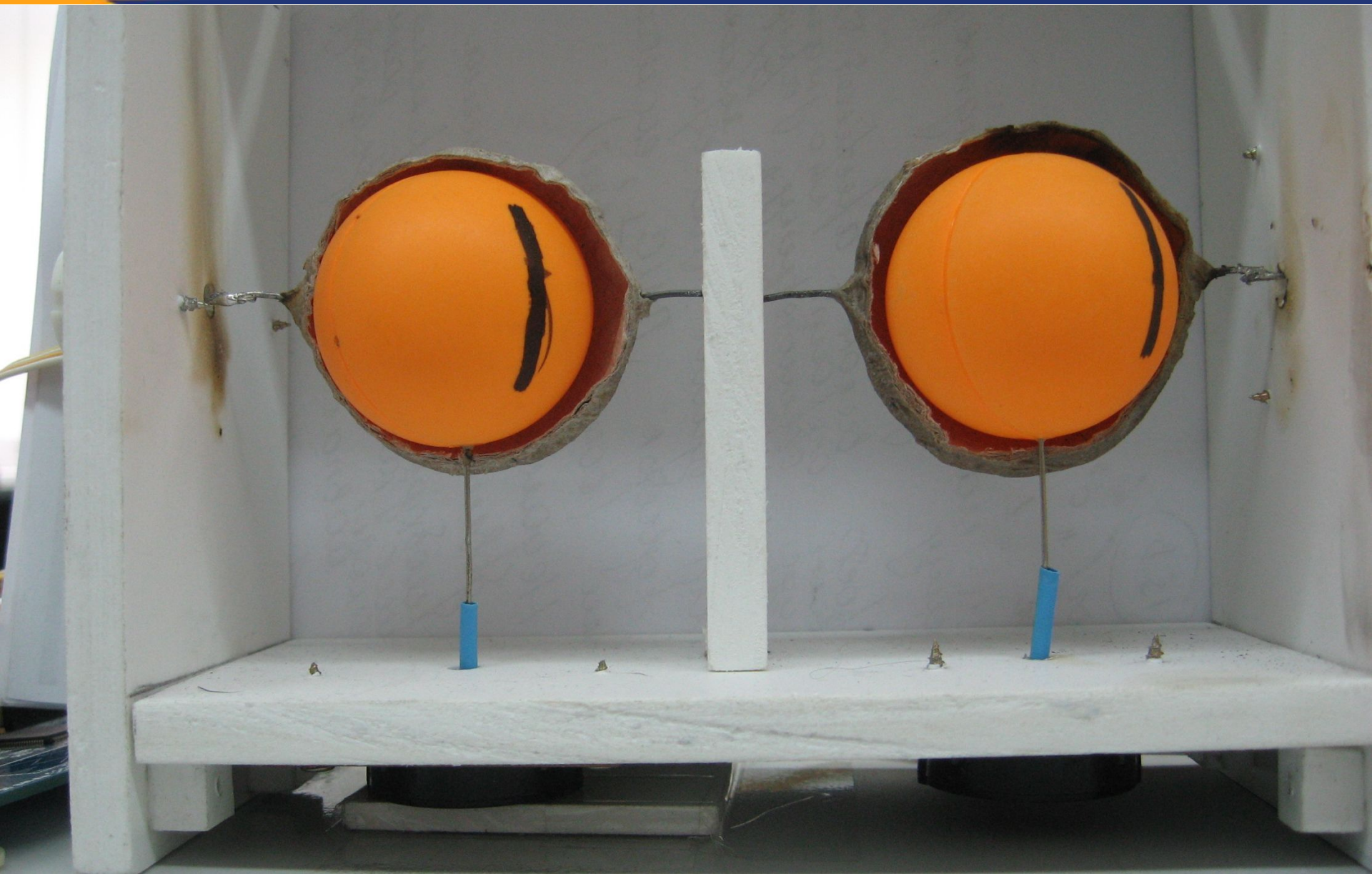

Stepper Motor PSoC@3/5

Stepper Motor PSoC@3/5

Рекомендована література :

***Основна*:**

1. AN56551 PSoC® 3 Stepper Motor Control with Precision Microstepping. 2011 . - 15 с.
1. PSoC® 3 Architecture TRM (Technical Reference Manual) – 379 с.

***Додаткова*:**

1. PSoC® Creator™ Component Datasheet. PWM. DAC8 – 6 с.

Приклади застосування МК PSOC

На сайті фірми Cypress знаходиться більше 200 Application Notes і Reference Designs, які ілюструють області застосування мікроконтролерів PSoC.

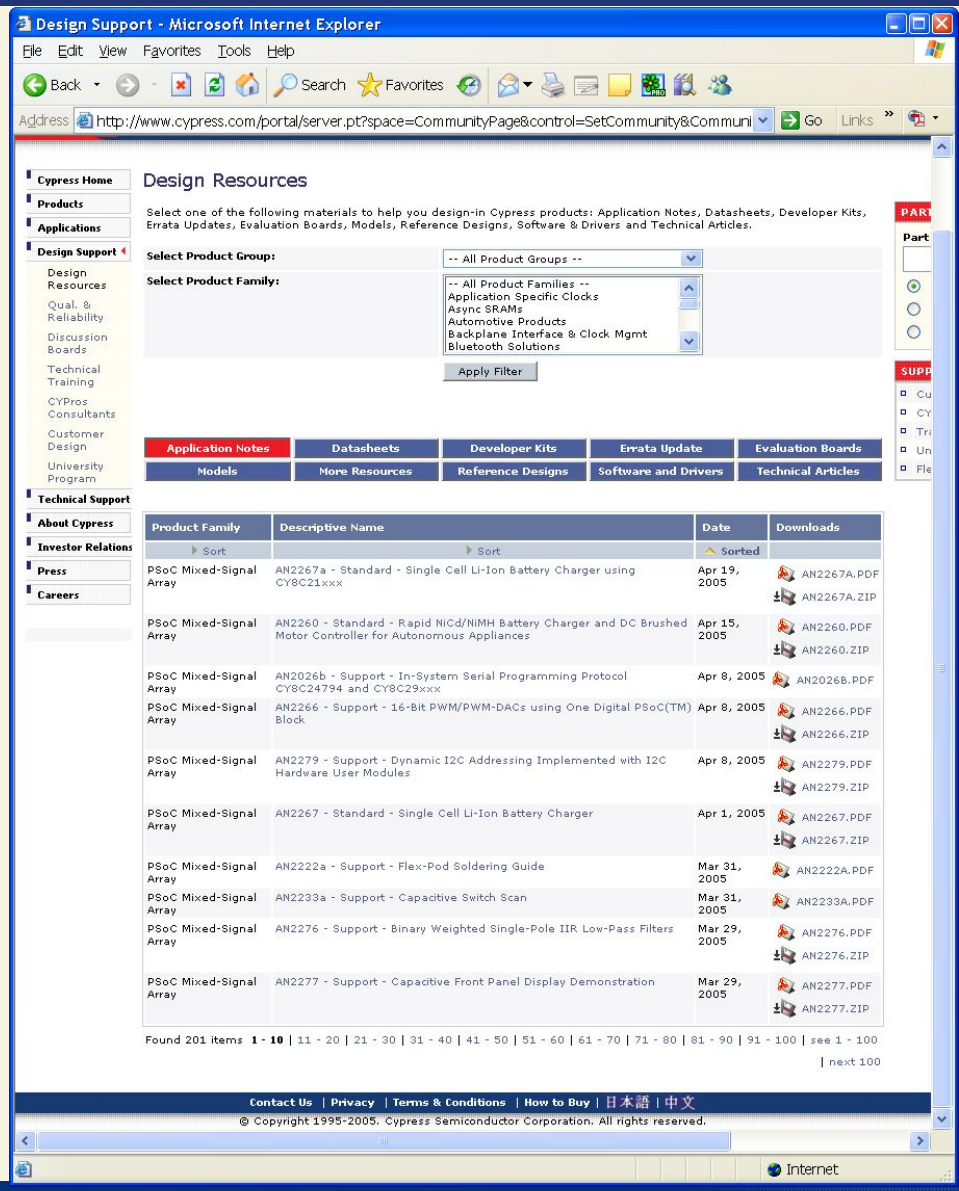

Мікропроцесорна техніка

2019 р.

(лекція 8, кінець)

Благітко Б.Я.

CYPRESS
PERFORM